M3253503E1B102GZTB

Aliases (C0603K102G1ETL)

SMD MIL C0G PRF32535, Ceramic, 1,000 pF, 2%, 100 VDC, C0G, SMD, Low ESR, MIL-PRF-32535, N/A, 0603 / 1608

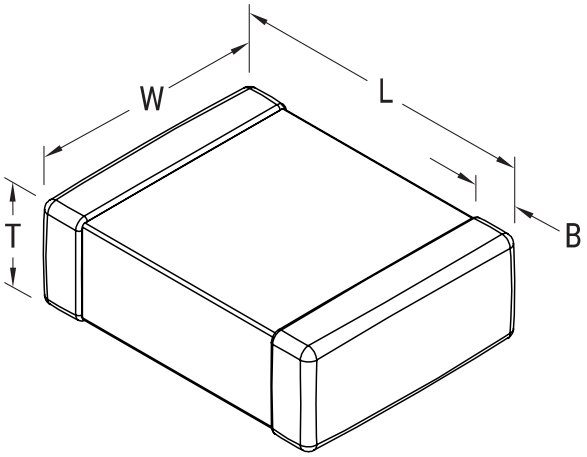

Click here for the 3D model.

General Information	
Series	SMD MIL C0G PRF32535
Style	SMD Chip
Description	SMD, Low ESR, MIL-PRF-32535
RoHS	No
Prop 65	**WARNING:** Cancer and reproductive harm - https://www.p65warnings.ca.gov/ .
Termination	Solder Plated
Failure Rate	N/A
Qualifications	MIL-PRF-32535 T-Level
AEC-Q200	No
Shelf Life	78 Weeks
MSL	1

Dimensions	
L	1.6mm +0.2/-0.15mm
W	0.81mm +0.2/-0.15mm
T	1.02mm MAX
B	0.41mm +/-0.2mm
Case Code (EIA / mm)	0603 / 1608

Packaging Specifications	
Packaging	Waffle
Packaging Quantity	368

Specifications	
Capacitance	1,000 pF
Tolerance	2%
Voltage DC	100 VDC
Dielectric Withstanding Voltage	250 VDC
Temperature Range	-55/+125°C
Temp. Coefficient	C0G
Capacitance Change with Reference to +25°C and 0 VDC Applied (TCC)	30 ppm/C, 1MHz 1.0Vrms
Dissipation Factor	0.15% 1 MHz 1.0Vrms
Aging Rate	0% Loss/Decade Hour
Insulation Resistance	100 GOhms

Statements of suitability for certain applications are based on our knowledge of typical operating conditions for such applications, but are not intended to constitute - and we specifically disclaim - any warranty concerning suitability for a specific customer application or use. This Information is intended for use only by customers who have the requisite experience and capability to determine the correct products for their application. Any technical advice inferred from this Information or otherwise provided by us with reference to the use of our products is given gratis, and we assume no obligation or liability for the advice given or results obtained.

© 2006 - 2025 YAGEO