# M3253502E2Z223KZMB

Aliases (C0402K223K3RML)

SMD MIL X7R PRF32535, Ceramic, 0.022 uF, 10%, 25 VDC, X7R, SMD, MIL-PRF-32535, N/A, 0.3 mm, 0402 / 1005

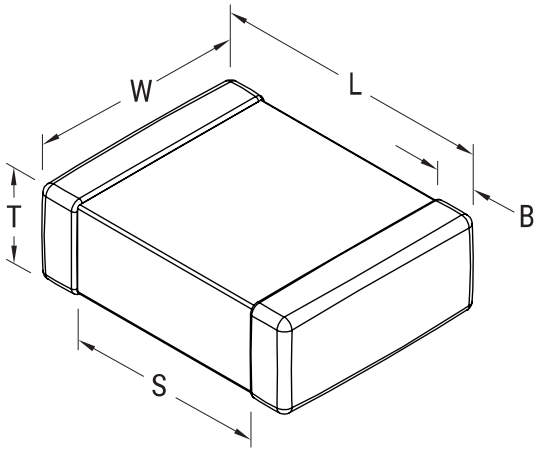


Click here for the 3D model.

| General Information | |
|---|---|
| Series | SMD MIL X7R PRF32535 |
| Style | SMD Chip |
| Description | SMD, MIL-PRF-32535 |
| RoHS | No |
| Prop 65 | **WARNING:** Cancer and reproductive harm - https://www.p65warnings.ca.gov/ . |
| SCIP Number | d66873f5-e54d-410c-a0cf-ebf6fcf635b5 |
| Termination | Solder Plated |
| Failure Rate | N/A |
| Qualifications | MIL-PRF-32535 M-Level |
| AEC-Q200 | No |
| Typical Component Weight | 1.6 mg |
| Shelf Life | 78 Weeks |
| MSL | 1 |

| Dimensions | |
|---|---|
| L | 1.02mm +0.15/-0.1mm |
| W | 0.51mm +0.13/-0.1mm |
| T | 0.64mm MAX |
| S | 0.3mm MIN |
| B | 0.1mm MIN |
| Case Code (EIA / mm) | 0402 / 1005 |

| Packaging Specifications | |
|---|---|
| Packaging | Waffle |
| Packaging Quantity | 368 |

| Specifications | |
|---|---|
| Capacitance | 0.022 uF |
| Tolerance | 10% |
| Voltage DC | 25 VDC |
| Dielectric Withstanding Voltage | 62.5 VDC |
| Temperature Range | -55/+125°C |
| Temp. Coefficient | X7R |
| Capacitance Change with Reference to +25°C and 0 VDC Applied (TCC) | 15%, 1kHz 1.0Vrms |
| Dissipation Factor | 3.5% 1 kHz 1.0Vrms |
| Aging Rate | 3% Loss/Decade Hour |
| Insulation Resistance | 45.4545 GOhms |

Statements of suitability for certain applications are based on our knowledge of typical operating conditions for such applications, but are not intended to constitute - and we specifically disclaim - any warranty concerning suitability for a specific customer application or use. This Information is intended for use only by customers who have the requisite experience and capability to determine the correct products for their application. Any technical advice inferred from this Information or otherwise provided by us with reference to the use of our products is given gratis, and we assume no obligation or liability for the advice given or results obtained.



© 2006 - 2025 YAGEO