

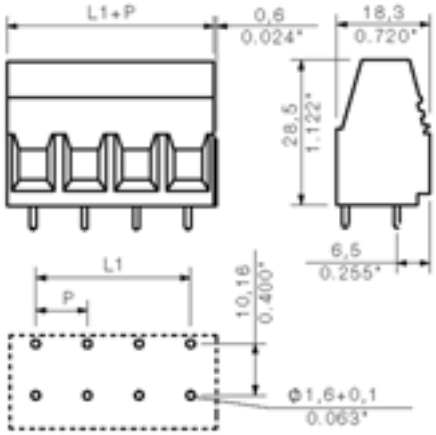





General ordering data	
Order No.	1648310000
Part designation	LU 10.16/2/90 2STI/4.5
Version	PCB terminal, Clamping yoke connection, Soldered connection, Clamping range, max.: 16 mm², Pitch: 10.16 mm, No. of poles: 2, 90°, Box
EAN	4008190291174
Qty.	20 pc(s).

System parameters	
Product family	System LU
Conductor connection system	Clamping yoke connection
Fitted to PCB	Soldered connection
Outgoing direction of conductor	90°
Pitch	10.16 mm
Pitch in inch	0.4 inch
No. of poles	2
Fitted by customer	yes
Max. adjacent poles per row	10
No. of rows	1
Solder pin length	4.5 mm
Dia. of fitting hole	1.6 mm
Fitting hole tolerance	+ 0.1 mm
No. of solder pins per pole	2

System parameters	
Screwdriver blade	1.0 x 5.5
Screwdriver blade standard	DIN 5264
Tightening torque, min.	1.2 Nm
Tightening torque, max.	1.5 Nm
Clamping screw	M 4
Stripping length	12 mm
L1 in mm	10.16 mm
L1 in inch	0.4 inch
Electric shock protection to DIN VDE 0470	IP20 plugged/ IP10 unplugged
Electric shock protection to DIN VDE 0470	Safe from finger touch

Material data	
Insulating material	Wemid (PA)
Colour	pebble grey
colour chart	Similar to RAL 7032
Insulating material group	I
Flammability class UL 94	V-0
CTI	>= 600
Temperature of glow-wire test	960 °C
Duration of glow-wire test	30 S
Contact base material	E-Cu
Contact surface	tinned
Storage temperature, min.	-25 °C
Storage temperature, max.	55 °C

Connectable conductors	
Clamping range, min.	0.14 mm²
Clamping range, max.	16 mm²
AWG, min.	22
AWG, max.	8
Solid, min. H05(07) V-U	0.5 mm²
Solid, max. H05(07) V-U	16 mm²
Stranded, min. H07V-R	6 mm²
Stranded, max. H07V-R	16 mm²
Flexible, min. H05(07) V-K	0.5 mm²
Flexible, max. H05(07) V-K	16 mm²
With wire end ferrule, acc. to DIN 46 228/1, min.	2.5 mm²
With wire end ferrule, acc. to DIN 46 228/1, max.	10 mm²
w. plastic collar ferrule, DIN 46228 pt 4, min.	2.5 mm²
w. plastic collar ferrule, DIN 46228 pt 4, max.	10 mm²
Gauge to EN 60999 a x b; ø	5.4 mm x 5.1 mm; 5.3 mm

DIN IEC rating data	
Rated current, min. No. pins (Tu=20°C)	76 A
Rated current, max. No. pins (Tu=20°C)	72 A
Rated current, min. No. pins(Tu=40°C)	76 A
Rated current, max. No. pins (Tu=40°C)	62 A
Rated voltage for overvoltage class/pollution severity II/2	1,000 V
Rated voltage for overvoltage class/pollution severity III/2	690 V

DIN IEC rating data	
Rated voltage for overvoltage class/pollution severity III/3	690 V
Rated impulse withstand voltage for overvoltage class/pollution severity II/2	4 kV
Rated impulse withstand voltage for overvoltage class/pollution severity III/2	6 kV
Rated impulse withstand voltage for overvoltage class/pollution severity III/3	6 kV
Short-time withstand current resistance	2 x 1s with 700 A

CSA rating data	
Rated current (Use group C)	65 A
Rated voltage (Use group C)	150 V
Rated voltage (Use group D)	300 V
Rated current (Use group D)	10 A
AWG conductor (field wiring), min.	22
AWG conductor (field wiring), max.	6

UL 1059 rating data	
Rated voltage (Use group C)	150 V
Rated current (Use group C)	65 A
Rated voltage (Use group D)	300 V
Rated current (Use group D)	10 A
AWG conductor, min.	26
AWG conductor, max.	6

Approvals

Approvals institutes

Downloads

CAD Library (P-CAD Format - Standard)	LU.lib

Classifications

ETIM 2.0	NK
ETIM 3.0	EC001284
eClass 4.1	NK
eClass 5.0	NK

Classifications

eClass 5.1	NK

Similar products

Order No.	Part designation	Version
1648300000	LU 10.16/3/90 2STI/4.5	PCB terminal, Clamping yoke connection, Soldered connection, Clamping range, max.: 16 mm², Pitch: 10.16 mm, No. of poles: 3, 90°, Box
9956390000	LU 10.16/4/90 4.5 GR	PCB terminal, Clamping yoke connection, Soldered connection, Clamping range, max.: 16 mm², Pitch: 10.16 mm, No. of poles: 4, 90°, Box
9956400000	LU 10.16/5/90 4.5 GR	PCB terminal, Clamping yoke connection, Soldered connection, Clamping range, max.: 16 mm², Pitch: 10.16 mm, No. of poles: 5, 90°, Box
9956410000	LU 10.16/6/90 4.5 GR	PCB terminal, Clamping yoke connection, Soldered connection, Clamping range, max.: 16 mm², Pitch: 10.16 mm, No. of poles: 6, 90°, Box
9956420000	LU 10.16/7/90 4.5 GR	PCB terminal, Clamping yoke connection, Soldered connection, Clamping range, max.: 16 mm², Pitch: 10.16 mm, No. of poles: 7, 90°, Box
9956430000	LU 10.16/8/90 4.5 GR	PCB terminal, Clamping yoke connection, Soldered connection, Clamping range, max.: 16 mm², Pitch: 10.16 mm, No. of poles: 8, 90°, Box
9956440000	LU 10.16/9/90 4.5 GR	PCB terminal, Clamping yoke connection, Soldered connection, Clamping range, max.: 16 mm², Pitch: 10.16 mm, No. of poles: 9, 90°, Box
9956450000	LU 10.16/10/90 4.5 GR	PCB terminal, Clamping yoke connection, Soldered connection, Clamping range, max.: 16 mm², Pitch: 10.16 mm, No. of poles: 10, 90°, Box