OMNIMATE Power - series LUP
LUP 10.16/01/90 5.0SN GY BX

Weidmüller Interface GmbH & Co. KG
Klingenbergstraße 16
D-32758 Detmold
Germany
Fon: +49 5231 14-0
Fax: +49 5231 14-292083
www.weidmueller.com

Product image

Similar to illustration

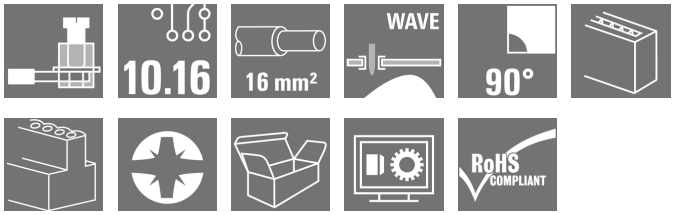

This PCB terminal provides connections for 1000 V, test point, 76 A and 16 mm² conductor cross-section with proven clamping yoke connection at 10.16 mm pitch, conductor outlet direction in 90° design.

General ordering data

Type	LUP 10.16/01/90 5.0SN GY BX
Order No.	2014270000
Version	Printed circuit board terminals, 10.16 mm, No. of poles: 1, 90°, Solder pin length (l): 5 mm, tinned, Pebble grey, Clamping yoke connection, Clamping range, max. : 16 mm², Box
GTIN (EAN)	4050118399097
Qty.	20 pc(s).
Product data	IEC: 1000 V / 76 A / 0.5 - 16 mm² UL: 300 V / 58 A / AWG 26 - AWG 6
Packaging	Box

OMNIMATE Power - series LUP
LUP 10.16/01/90 5.0SN GY BX

Weidmüller Interface GmbH & Co. KG
Klingenbergstraße 16
D-32758 Detmold
Germany
Fon: +49 5231 14-0
Fax: +49 5231 14-292083
www.weidmueller.com

Technical data

Dimensions and weights

Width	10.96 mm	Width (inches)	0.431 inch
Height	36.5 mm	Height (inches)	1.437 inch
Height of lowest version	31.5 mm	Depth	25.1 mm
Depth (inches)	0.988 inch	Net weight	9.32 g

System parameters

Product family	OMNIMATE Power - series LUP	Wire connection method	Clamping yoke connection
Mounting onto the PCB	THT solder connection	Conductor outlet direction	90°
Pitch in mm (P)	10.16 mm	Pitch in inches (P)	0.4 inch
No. of poles	1	Fitted by customer	Yes
Max. adjacent poles per row	12	Solder pin length (l)	5 mm
Solder pin dimensions	1.2 x 1.2 mm	Solder eyelet hole diameter (D)	1.6 mm
Solder eyelet hole diameter tolerance (D)	+ 0,1 mm	Number of solder pins per pole	2
Screwdriver blade	1.0 x 5.5, PZ 2	Screwdriver blade standard	DIN 5264
Tightening torque, min.	1.2 Nm	Tightening torque, max.	1.5 Nm
Clamping screw	M 4	Stripping length	12 mm
L1 in mm	0 mm	L1 in inches	0 inch
Touch-safe protection acc. to DIN VDE 0470	IP20 plugged/ IP10 unplugged	Touch-safe protection acc. to DIN VDE 57 106	Safe from finger touch
Volume resistance	0.50 mΩ		

Material data

Insulating material	Wemid (PA)	Colour	Pebble grey
Colour chart (similar)	RAL 7032	Insulating material group	I
CTI	≥ 600	UL 94 flammability rating	V-0
Contact material	E-Cu	Contact surface	tinned
Layer structure of solder connection	1.5-3 µm Ni / 4-6 µm Sn matt	Storage temperature, min.	-25 °C
Storage temperature, max.	55 °C	Max. relative humidity during storage	80 %
Operating temperature, min.	-50 °C	Operating temperature, max.	120 °C
Temperature range, installation, min.	-25 °C	Temperature range, installation, max.	120 °C

Conductors suitable for connection

Clamping range, min.	0.13 mm²
Clamping range, max.	16 mm²
Wire connection cross section AWG, min.	AWG 22
Wire connection cross section AWG, max.	AWG 6
Solid, min. H05(07) V-U	0.5 mm²
Solid, max. H05(07) V-U	16 mm²
Stranded, min. H07V-R	6 mm²
Stranded, max. H07V-R	16 mm²
Flexible, min. H05(07) V-K	0.5 mm²
Flexible, max. H05(07) V-K	16 mm²
w. plastic collar ferrule, DIN 46228 pt 4, min.	2.5 mm²
w. plastic collar ferrule, DIN 46228 pt 4, max.	10 mm²
w. wire end ferrule, DIN 46228 pt 1, min	2.5 mm²
w. wire end ferrule, DIN 46228 pt 1, max.	10 mm²

OMNIMATE Power - series LUP
LUP 10.16/01/90 5.0SN GY BX

Weidmüller Interface GmbH & Co. KG
Klingenbergstraße 16
D-32758 Detmold
Germany
Fon: +49 5231 14-0
Fax: +49 5231 14-292083
www.weidmueller.com

Technical data

Plug gauge in accordance with EN 60999 a x b; ø	5.4 mm x 5.1 mm; 5.3 mm			
Clampable conductor	Cross-section for conductor connection	Type	fine-wired	
		nominal	2.5 mm²	
	AEH	Stripping length	nominal	12 mm
		Stripping length	nominal	14 mm
	Cross-section for conductor connection	Type	fine-wired	
		nominal	4 mm²	
	AEH	Stripping length	nominal	12 mm
		Stripping length	nominal	14 mm
	Cross-section for conductor connection	Type	fine-wired	
		nominal	6 mm²	
	AEH	Stripping length	nominal	12 mm
		Stripping length	nominal	14 mm
	Cross-section for conductor connection	Type	fine-wired	
		nominal	10 mm²	
	AEH	Stripping length	nominal	15 mm
		Stripping length	nominal	12 mm
Max. clamping range	16 mm²			

Rated data acc. to IEC

tested acc. to standard	IEC 60664-1, IEC 61984	Rated current, min. no. of poles (Tu=20°C)	76 A
Rated current, max. no. of poles (Tu=20°C)	72 A	Rated current, min. no. of poles (Tu=40°C)	72 A
Rated current, max. no. of poles (Tu=40°C)	62 A	Rated voltage for surge voltage class / pollution degree II/2	1,000 V
Rated voltage for surge voltage class / pollution degree III/2	1,000 V	Rated voltage for surge voltage class / pollution degree III/3	800 V
Rated impulse voltage for surge voltage class/ pollution degree II/2	6 kV	Rated impulse voltage for surge voltage class/ pollution degree III/2	8 kV
Rated impulse voltage for surge voltage class/ contamination degree III/3	8 kV	Short-time withstand current resistance	1 x 1s with 700 A

Rated data acc. to CSA

Institute (CSA)		Certificate No. (CSA)	200039-1198743
Rated voltage (Use group B / CSA)	300 V	Rated voltage (Use group C / CSA)	300 V
Rated voltage (Use group D / CSA)	600 V	Rated current (Use group B / CSA)	58 A
Rated current (Use group C / CSA)	58 A	Rated current (Use group D / CSA)	5 A
Wire cross-section, AWG, min.	AWG 22	Wire cross-section, AWG, max.	AWG 6
Reference to approval values	Specifications are maximum values, details - see approval certificate.		

OMNIMATE Power - series LUP
LUP 10.16/01/90 5.0SN GY BX

Weidmüller Interface GmbH & Co. KG
Klingenbergstraße 16
D-32758 Detmold
Germany
Fon: +49 5231 14-0
Fax: +49 5231 14-292083
www.weidmueller.com

Technical data

Rated data acc. to UL 1059

Institute (cURus)		Certificate No. (cURus)	E60693
Rated voltage (Use group B / UL 1059)	300 V	Rated voltage (Use group C / UL 1059)	300 V
Rated voltage (Use group D / UL 1059)	600 V	Rated current (Use group B / UL 1059)	58 A
Rated current (Use group C / UL 1059)	58 A	Rated current (Use group D / UL 1059)	5 A
Wire cross-section, AWG, min.	AWG 26	Wire cross-section, AWG, max.	AWG 6
Reference to approval values	Specifications are maximum values, details - see approval certificate.		

Packing

Packaging	Box	VPE length	50 mm
VPE width	75 mm	VPE height	115 mm

Classifications

ETIM 3.0	EC001284	ETIM 4.0	EC002643
ETIM 5.0	EC002643	ETIM 6.0	EC002643
eClass 6.2	27-26-11-01	eClass 9.0	27-44-04-01
eClass 9.1	27-44-04-01		

Notes

Notes

- Additional colours on request
- Rated current related to rated cross-section & min. No. of poles.
- Wire end ferrule without plastic collar to DIN 46228/1
- Wire end ferrule with plastic collar to DIN 46228/4
- The data given under CSA relates to a cUL approval - E60693
- P on drawing = pitch
- Rated data refer only to the component itself. Clearance and creepage distances to other components are to be designed in accordance with the relevant application standards.
- The test point can only be used as potential-pickup point.

IPC conformity: Conformity: The products are developed, manufactured and delivered according international recognized standards and norms and comply with the assured properties in the data sheet resp. fulfill decorative properties in accordance with IPC-A-610 "Class 2". Further claims on the products can be evaluated on request.

Approvals

Approvals

ROHS: Conform

OMNIMATE Power - series LUP
LUP 10.16/01/90 5.0SN GY BX

Weidmüller Interface GmbH & Co. KG
Klingenbergstraße 16
D-32758 Detmold
Germany
Fon: +49 5231 14-0
Fax: +49 5231 14-292083
www.weidmueller.com

Technical data

Downloads

Approval/Certificate/Document of Conformity	Declaration of the Manufacturer
Brochure/Catalogue	FL DRIVES EN MB DEVICE MANUF. EN FL DRIVES DE FL APPL_INVERTER EN FL_BASE_STATION_EN FL ELEVATOR EN FL POWER SUPPLY EN FL 72H SAMPLE SER EN PO OMNIMATE EN
Engineering Data	EPLAN, WSCAD
Engineering Data	STEP
Motion controllers white paper	Download Whitepaper
User Documentation	QR-Code product handling video
White Paper UL 600 V	Download Whitepaper

OMNIMATE Power - series LUP
LUP 10.16/01/90 5.0SN GY BX

Weidmüller Interface GmbH & Co. KG
Klingenbergstraße 16
D-32758 Detmold
Germany
Fon: +49 5231 14-0
Fax: +49 5231 14-292083
www.weidmueller.com

Drawings

Dimensional drawing

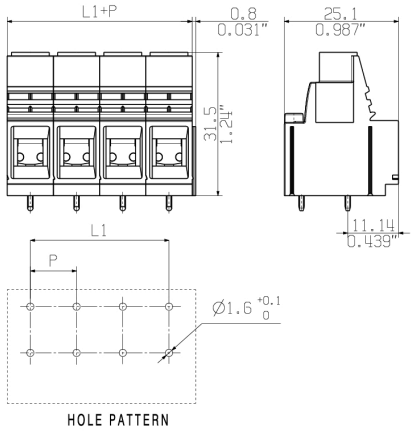

Graph

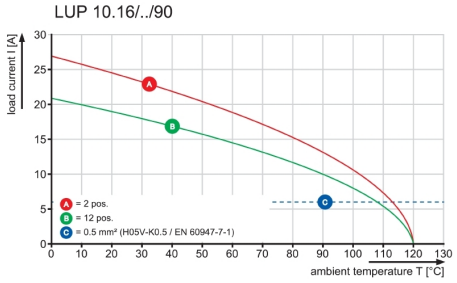

Graph

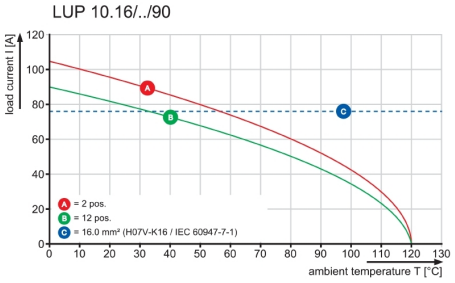

Dimensions without tolerances are no check dimensions

The English version is binding

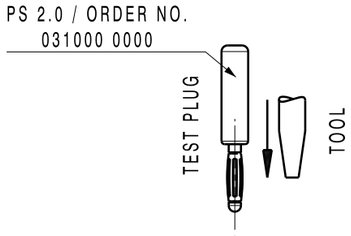

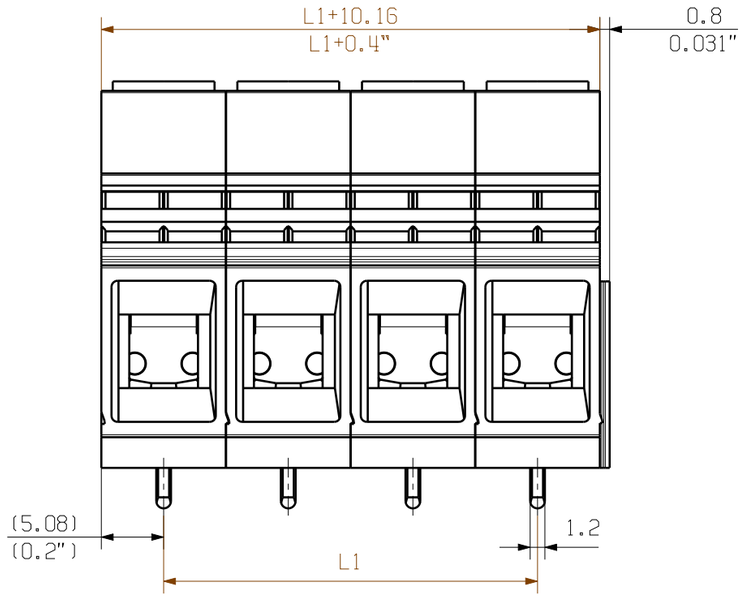

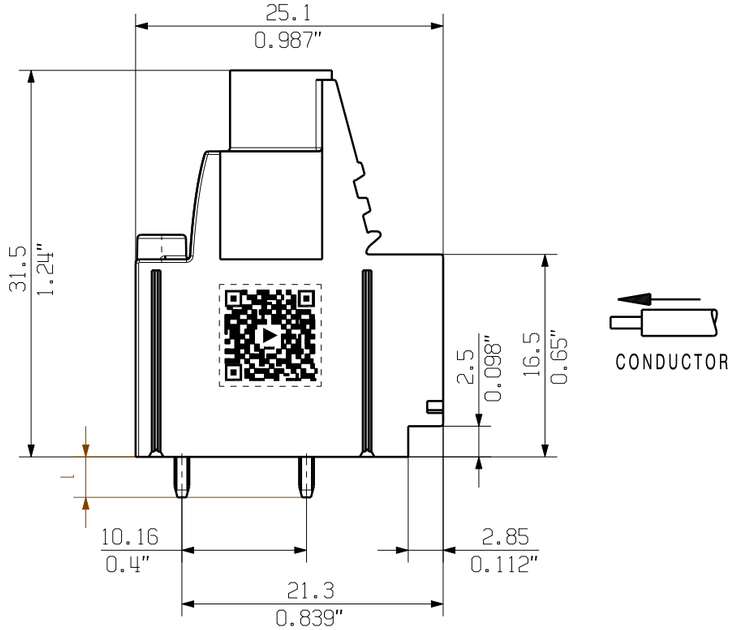

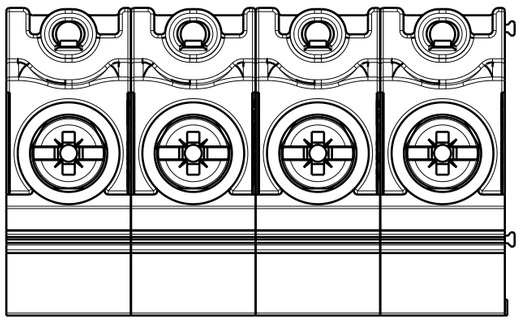

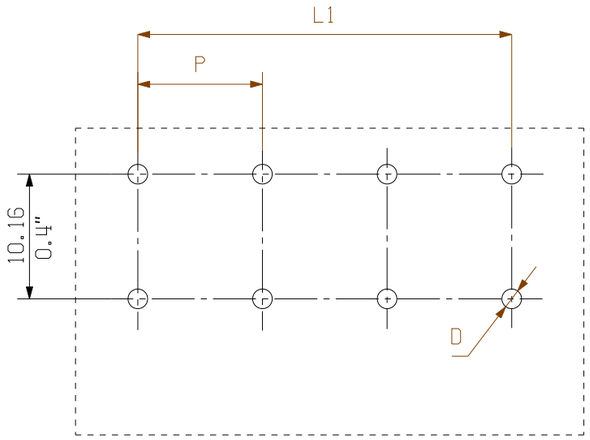

l =Lötstiftlänge
solder pin length

P = Raster/pitch
n = Polzahl/no of poles

1:1

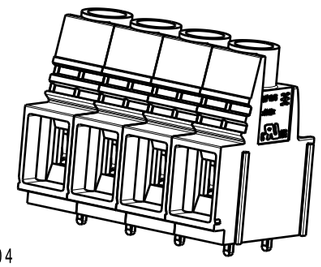

SHOWN : LUP 10.16/04

n	L1 [mm]	L1 [Inch]
12	111,76	4,400
11	101,60	4,000
10	91,44	3,600
9	81,28	3,200
8	71,12	2,800
7	60,96	2,400
6	50,80	2,000
5	40,64	1,600
4	30,48	1,200
3	20,32	0,800
2	10,16	0,400

l [mm]	l [inch]
5.0	0.196
3.2	0.125

GENERAL TOLERANCE:
DIN ISO 2768-mK

For the mounting of PCBs, it should be noted that the rated data given in the catalogue relates only to the connection elements. The neccessary creepage and clearance paths must be observed in connection with the respective applicant in accordance to VDE 0110. The current-carrying capacity and pitch tolerance is to be determined according to DIN IEC 326 part 3 very fine.

Weidmüller connectors are tested to the DIN VDE 0627 standard, and are valid for its field of application. Provided that the connectors are used to the intended purpose, all requirements with respect to the occuring of electrical, mechanical, thermic and corrosive stress will be satisfied.

RoHS COMPLIANT

102478

First Issue Date
03.03.2018

Modification

Prim PLM Part No.: 009275

Prim ERP Part No.: 1226310000

Weidmüller

34162
Drawing no.

11
Issue no.

Sheet 01 of 02 sheets

	Date	Name
Drawn	03.03.2018	Administrator
Responsible		Amann, Alexand
Approved	22.11.2018	Lang, Thomas

Scale: 2:1 Size: A3

Drawings Assembly

LUP 10.16/../90...
LEITERPLATTENKLEMME
PCB TERMINAL

Product file: 7233 LUP 10.16/12.7

The reproduction, distribution and utilization of this document as well as the communication of its contents to others without explicit authorization is prohibited.
Offenders will be held liable for the payment of damages. Weidmueller exclusively reserves the right to file for patents, utility models or designs.
© Weidmueller Interface GmbH & Co. KG

Recommended wave solderding profiles

Weidmüller Interface GmbH & Co. KG
Klingenbergstraße 16
D-32758 Detmold
Germany
Fon: +49 5231 14-0
Fax: +49 5231 14-292083
www.weidmueller.com

Single Wave:

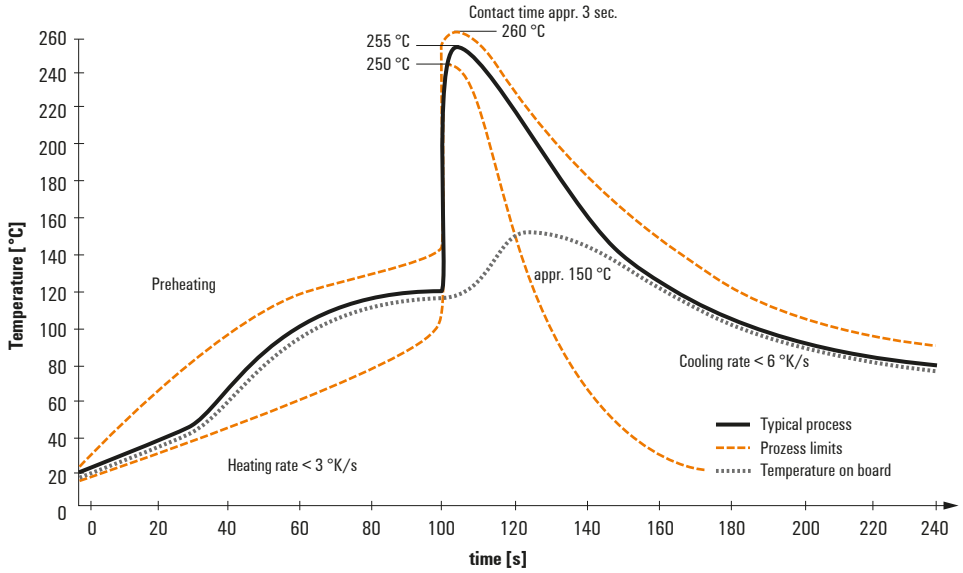

Double Wave:

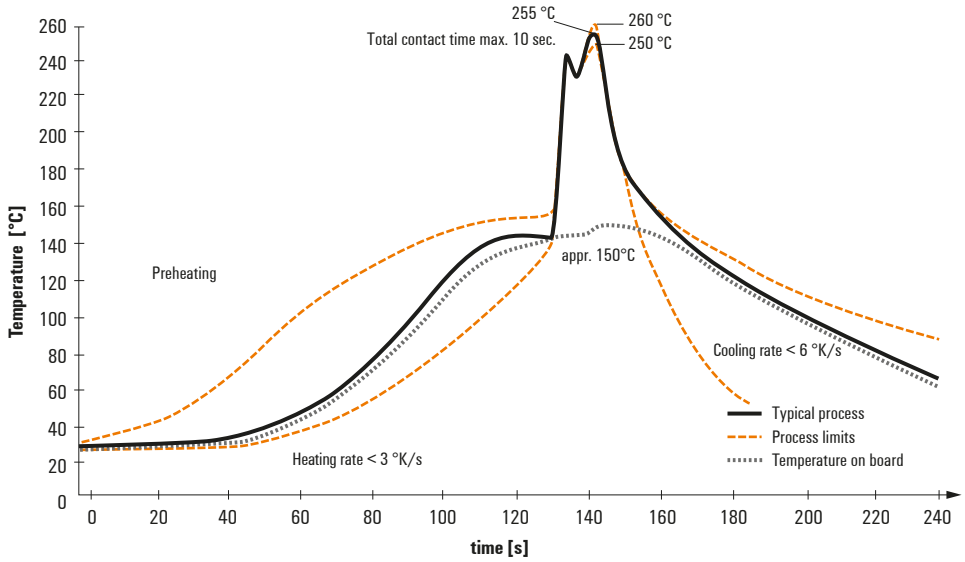

Wave soldering profiles

Wired connection elements should be processed in accordance with the DIN EN 61760-1 standard. We have included two recommendations for practical wave soldering profiles, with which Weidmüller PCB terminals and connectors are qualified.

When choosing a suitable profile for your application, the following factors also need to be considered:
- PCB thickness
- Proportion of Cu in the layers
- Single/double-sided assembly
- Product range
- Heating and cooling rates

The single and double wave profiles each indicate the recommended operating range, including the maximum soldering temperature of 260°C. In practice, the maximum soldering temperature is quite often well below the above maximum profile.

We reserve the right to make technical changes.