6010QM, 6011QM, 6012QM, 6013QM and 6091QM Series Non-Relampable Oil-Tight Neon or LED Indicator Lights

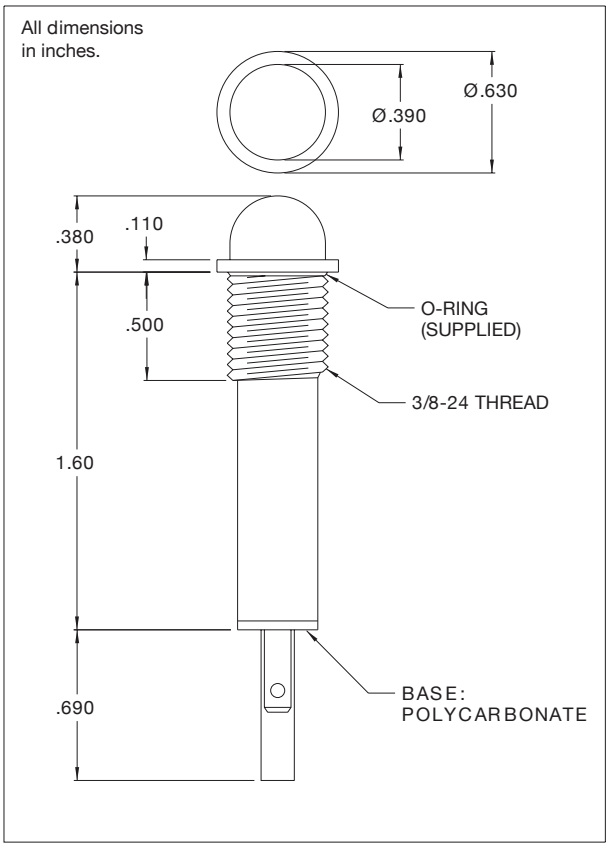

Solid-state indicator lights complete with built-in current-limiting resistor and rectifier diode.

Mounting: Ø.380” min. hole. Supplied with internal tooth lock washer and hex nut.

Panel Thickness: 0.250”/0.030”

Lens: Polycarbonate

Terminals: Quick-connect, tinned brass .187” x .020”

Bezel: Polished stainless steel. For black finish add “X” after the series letter(s) Ex. 6010QMX1 (Red lens with black bezel)

Gaskets: Buna-N

Housing: Black Nylon

Mounting Hole: "D" flat is optional

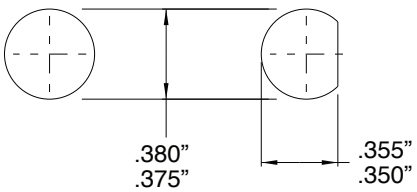

Lens Color	Neon	
	Model No. (105-125VAC)	Model No. (208-250VAC)
Red	6010QM1	6011QM1
Amber	6010QM3	6011QM3
Green	6012QM5*	-
Lamp used	C2A+Resistor	C2A+Resistor

* Incorporates G2B lamp and resistor.
Underwriters Laboratories (UL) File No. E20356

Lens Color	LED Solid State Indicator		
	Model No. for 12V	Model No. for 24V	Incorporates LED**
Red	6091QM1-12V	6091QM1-24V	4304H1
Green	6091QM5-12V	6091QM5-24V	4304H5
Yellow	6091QM7-12V	6091QM7-24V	4304H7
Internal Resistor (ohms)	390	1000	-

**Note: Also incorporates IN4004 (400 P.I.V.) rectifier diode. Red lead positive.

Compliance & Approvals