Power Metal Strip® Battery Shunt Resistor, Very Low Value (50 µΩ, 100 µΩ, 125 µΩ, and 250 µΩ)



FEATURES

- High power to resistor size ratio
- Proprietary processing technique produces extremely low resistance values
- All welded construction
- Very low inductance (< 5 nH)
- Low thermal EMF (as low as < 1 µV/°C)
- AEC-Q200 qualified
- Material categorization: for definitions of compliance please see www.vishay.com/doc?99912

AUTOMOTIVE GRADE
Pb-free
RoHS COMPLIANT
HALOGEN FREE
GREEN (5-2008)

LINKS TO ADDITIONAL RESOURCES

3D Models
Design Tools

STANDARD ELECTRICAL SPECIFICATIONS

GLOBAL MODEL	SIZE	POWER RATING $P_{70\,°C}$ W	TOLERANCE ± %	RESISTANCE VALUE RANGE (1) Ω	RESISTANCE VALUES CURRENTLY AVAILABLE (2) Ω	WEIGHT (typical) g
WSBS8518	8518	36	5, 10	50µ to 1000µ	50µ, 100µ, 125µ, 250µ	50µ = 37.9, 100µ / 125u = 36.5, 250µ = 33.7

Notes

(1) Please reference WSBS8518…34 datasheet (www.vishay.com/doc?30354) for resistance values 500 µΩ to 1000 µΩ

(2) Other values may be available, contact factory

TECHNICAL SPECIFICATIONS

PARAMETER	UNIT	RESISTOR CHARACTERISTICS
Temperature coefficient	ppm/°C	± 200 for 50 µΩ
		± 175 for 100 µΩ, 125 µΩ
		± 110 for 250 µΩ
Temperature coefficient (element material)	ppm/°C	± 20
Operating temperature range	°C	-65 to +170
Thermal EMF	µV/°C	< 1 for 50 µΩ and < 3 for 100 µΩ, 125 µΩ, 250 µΩ
Maximum current rating	A	$(P/R)^{1/2}$

GLOBAL PART NUMBER INFORMATION

Global Part Numbering: WSBS8518L1250JK (WSBS8518, 0.000125 Ω, ± 5 %, bulk pack)

W	S	B	S	8	5	1	8	L	1	2	5	0	J	K		

GLOBAL MODEL	RESISTANCE VALUE	TOLERANCE CODE	PACKAGING CODE	SPECIAL
WSBS8518	**L** = mΩ **L0500** = 0.000050 Ω **L1000** = 0.000100 Ω **L1250** = 0.000125 Ω **L2500** = 0.000250 Ω	**J** = ± 5 % **K** = ± 10 %	**K** = bulk pack **T** = tray pack	(dash number) (up to 2 digits) from **1 to 99** as applicable

For technical questions, contact: ww2cresistors@vishay.com

THIS DOCUMENT IS SUBJECT TO CHANGE WITHOUT NOTICE. THE PRODUCTS DESCRIBED HEREIN AND THIS DOCUMENT ARE SUBJECT TO SPECIFIC DISCLAIMERS, SET FORTH AT www.vishay.com/doc?91000

DIMENSIONS in inches (millimeters)

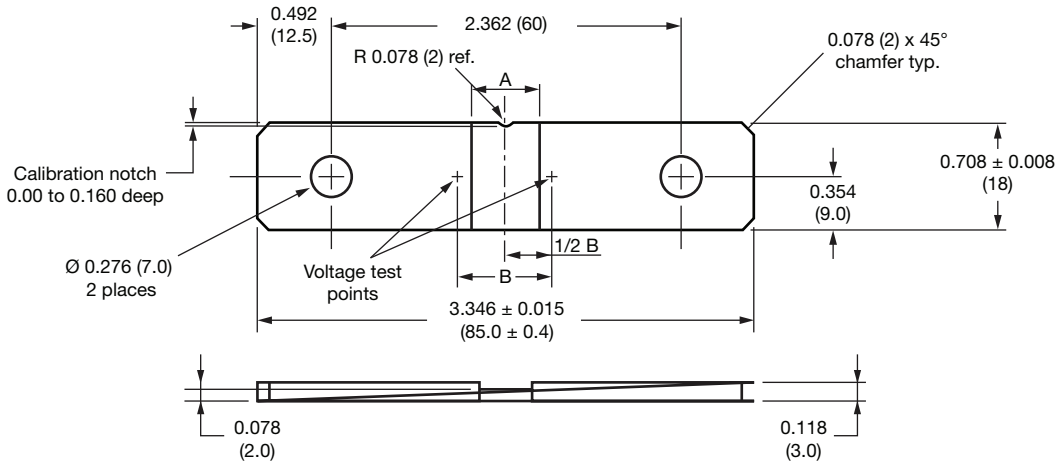

RESISTANCE VALUE (μΩ)	ELEMENT MATERIAL	A REFERENCE	B ± 0.005 (± 0.13)
50	Mn-Cu	0.145 (3.68)	0.270 (8.71)
100	Mn-Cu	0.370 (9.40)	0.495 (12.57)
125	Mn-Cu	0.480 (12.19)	0.605 (15.37)
250	Mn-Cu	0.900 (22.86)	1.025 (26.04)

TOLERANCES ON DECIMALS
.xxx ± 0.005 (.x ± 0.1)

UNLESS OTHERWISE LISTED

DERATING

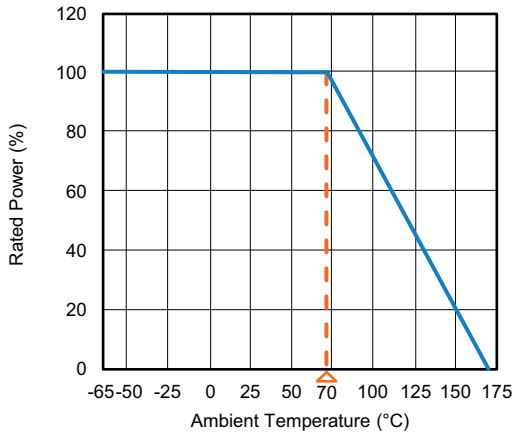

PULSE CAPABILITY

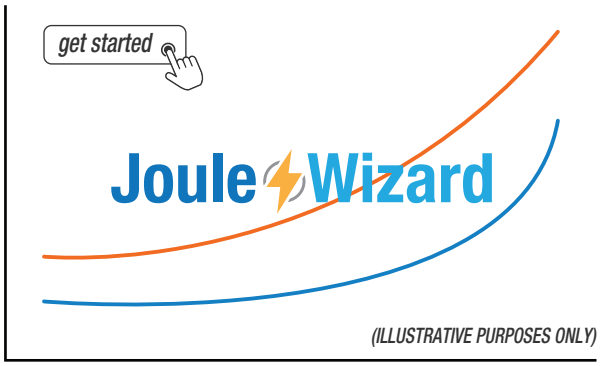

www.vishay.com/en/resistors/joulewizard/

PERFORMANCE		
TEST	CONDITIONS OF TEST	TEST LIMITS
Thermal shock	-55 °C to +150 °C, 1000 cycles, 15 min at each extreme	± 0.5 % Δ*R*
Short time overload	5 x rated power for 5 s	± 0.5 % Δ*R*
Low temperature storage	-65 °C for 24 h	± 0.5 % Δ*R*
High temperature exposure	1000 h at +170 °C	± 1.0 % Δ*R*
Bias humidity	+85 °C, 85 % RH, 10 % bias, 1000 h	± 0.5 % Δ*R*
Mechanical shock	100 *g*'s for 6 ms, 5 pulses	± 0.5 % Δ*R*
Vibration	Frequency varied 10 Hz to 2000 Hz in 1 min, 3 directions, 12 h	± 0.5 % Δ*R*
Load life	1000 h at +70 °C, 1.5 h "ON", 0.5 h "OFF"	± 1.0 % Δ*R*
Moisture resistance	MIL-STD-202, method 106, 0 % power, 7b not required	± 0.5 % Δ*R*

For technical questions, contact: ww2cresistors@vishay.com

THIS DOCUMENT IS SUBJECT TO CHANGE WITHOUT NOTICE. THE PRODUCTS DESCRIBED HEREIN AND THIS DOCUMENT ARE SUBJECT TO SPECIFIC DISCLAIMERS, SET FORTH AT www.vishay.com/doc?91000

AVAILABLE CATALOG OPTIONS		
GLOBAL MODEL	**SPECIAL**	
WSBS8518	Cu terminals	www.vishay.com/doc?30134
WSBS8518...14	Sn plated	www.vishay.com/doc?30340
WSBS8518…20	Two sense pins	www.vishay.com/doc?30341
WSBS8518…34	Low TCR	www.vishay.com/doc?30354
WSBS8518…35	Sense pins, low TCR	www.vishay.com/doc?30355
WSBS8518…40	Three sense pins	www.vishay.com/doc?30350
WSBS8518…60	Two sense pins, Sn plated	www.vishay.com/doc?30390
WSBS8518…80	Three sense pins, Sn plated	www.vishay.com/doc?30391
WSBS8518…M3	M3 tapped holes	www.vishay.com/doc?30374
WSBS8518…M4	M4 tapped holes	www.vishay.com/doc?30375
WSBS8518…P3	M3 tapped holes, Sn plated	www.vishay.com/doc?30392
WSBS8518…P4	M4 tapped holes, Sn plated	www.vishay.com/doc?30393

LINKS TO RELATED DOCUMENTS	
TECHNICAL NOTES	
The Benefit of Using a Three Sense Pin Design on Battery / Meter Shunt Resistors	www.vishay.com/doc?30381
WHITE PAPERS	
Temperature Coefficient of Resistance for Current Sensing	www.vishay.com/doc?30405

For technical questions, contact: ww2cresistors@vishay.com

THIS DOCUMENT IS SUBJECT TO CHANGE WITHOUT NOTICE. THE PRODUCTS DESCRIBED HEREIN AND THIS DOCUMENT ARE SUBJECT TO SPECIFIC DISCLAIMERS, SET FORTH AT www.vishay.com/doc?91000

Disclaimer

ALL PRODUCT, PRODUCT SPECIFICATIONS AND DATA ARE SUBJECT TO CHANGE WITHOUT NOTICE TO IMPROVE RELIABILITY, FUNCTION OR DESIGN OR OTHERWISE.

Vishay Intertechnology, Inc., its affiliates, agents, and employees, and all persons acting on its or their behalf (collectively, “Vishay”), disclaim any and all liability for any errors, inaccuracies or incompleteness contained in any datasheet or in any other disclosure relating to any product.

Vishay makes no warranty, representation or guarantee regarding the suitability of the products for any particular purpose or the continuing production of any product. To the maximum extent permitted by applicable law, Vishay disclaims (i) any and all liability arising out of the application or use of any product, (ii) any and all liability, including without limitation special, consequential or incidental damages, and (iii) any and all implied warranties, including warranties of fitness for particular purpose, non-infringement and merchantability.

Statements regarding the suitability of products for certain types of applications are based on Vishay's knowledge of typical requirements that are often placed on Vishay products in generic applications. Such statements are not binding statements about the suitability of products for a particular application. It is the customer's responsibility to validate that a particular product with the properties described in the product specification is suitable for use in a particular application. Parameters provided in datasheets and / or specifications may vary in different applications and performance may vary over time. All operating parameters, including typical parameters, must be validated for each customer application by the customer's technical experts. Product specifications do not expand or otherwise modify Vishay's terms and conditions of purchase, including but not limited to the warranty expressed therein.

Hyperlinks included in this datasheet may direct users to third-party websites. These links are provided as a convenience and for informational purposes only. Inclusion of these hyperlinks does not constitute an endorsement or an approval by Vishay of any of the products, services or opinions of the corporation, organization or individual associated with the third-party website. Vishay disclaims any and all liability and bears no responsibility for the accuracy, legality or content of the third-party website or for that of subsequent links.

Vishay products are not designed for use in life-saving or life-sustaining applications or any application in which the failure of the Vishay product could result in personal injury or death unless specifically qualified in writing by Vishay. Customers using or selling Vishay products not expressly indicated for use in such applications do so at their own risk. Please contact authorized Vishay personnel to obtain written terms and conditions regarding products designed for such applications.

No license, express or implied, by estoppel or otherwise, to any intellectual property rights is granted by this document or by any conduct of Vishay. Product names and markings noted herein may be trademarks of their respective owners.

© 2026 VISHAY INTERTECHNOLOGY, INC. ALL RIGHTS RESERVED

THIS DOCUMENT IS SUBJECT TO CHANGE WITHOUT NOTICE. THE PRODUCTS DESCRIBED HEREIN AND THIS DOCUMENT ARE SUBJECT TO SPECIFIC DISCLAIMERS, SET FORTH AT www.vishay.com/doc?91000