High Accuracy Ambient Light Sensor With I²C Interface

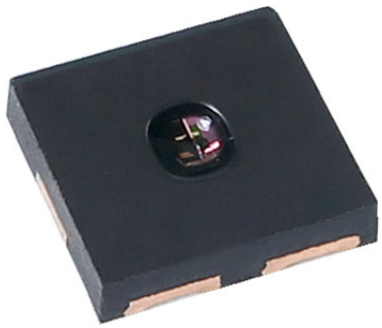

FEATURES

- Package type: surface-mount
- Dimensions (L x W x H in mm): 2.67 x 2.45 x 0.6
- AEC-Q100 qualified
- Integrated modules: ambient light sensor (ALS)
- Supply voltage range V_{DD}: 2.5 V to 3.6 V
- Communication via I²C interface
- I²C bus H-level range: 1.7 V to 3.6 V
- Floor life: 4 weeks, MSL 2a, according to J-STD-020
- Low shut down current consumption: typ. 0.5 µA
- Material categorization: for definitions of compliance please see www.vishay.com/doc?99912

AUTOMOTIVE GRADE

Pb-free

e4

RoHS COMPLIANT

HALOGEN FREE

GREEN (5-2008)

LINKS TO ADDITIONAL RESOURCES

Design Tools | Related Documents | 3D Models | Application Notes | Infographics

DESCRIPTION

VEML6031X00 is a high accuracy ambient light digital 16-bit resolution sensor in a miniature opaque 2.67 mm x 2.45 mm package. It includes a high sensitive photodiode, a low noise amplifier, a 16-bit A/D converter and supports an easy to use I²C bus communication interface and additional interrupt feature.

The ambient light result is as digital value available.

APPLICATIONS

Ambient light sensor in automotive for

- Display backlight controls
- Infotainment systems
- Rear view mirror dimming
- Interior lighting control systems
- Head-up displays

AMBIENT LIGHT FUNCTION

- Filtron™ technology adaption: close to real human eye response
- Typical ALS output tolerance of ≤ 10 % under different light sources
- 16-bit dynamic range for ambient light detection from 0 lx to about 172 klx with resolution down to 0.0026 lx/ct, supports low transmittance (dark) lens design
- Excellent temperature compensation
- High dynamic detection resolution

PRODUCT SUMMARY

PART NUMBER	OPERATING VOLTAGE RANGE (V)	I²C BUS VOLTAGE RANGE (V)	AMBIENT LIGHT RANGE (lx)	AMBIENT LIGHT RESOLUTION (lx)	OUTPUT CODE	ADC RESOLUTION PROXIMITY / AMBIENT LIGHT
VEML6031X00	2.5 to 3.6	1.7 to 3.6	0 to 172 000	0.0026	16 bit, I²C	- / 16 bit

ORDERING INFORMATION

ORDERING CODE	SLAVE ADDRESS (7 BIT)	PACKAGING	VOLUME (1)	REMARKS
VEML6031X00	0x29	Tape and reel	MOQ: 3000	2.67 mm x 2.45 mm x 0.6 mm
VEML6031X00-GS15	0x29	Tape and reel	MOQ: 10 000	2.67 mm x 2.45 mm x 0.6 mm
VEML60311X00	0x10	Tape and reel	MOQ: 3000	2.67 mm x 2.45 mm x 0.6 mm
VEML60311X00-GS15	0x10	Tape and reel	MOQ: 10 000	2.67 mm x 2.45 mm x 0.6 mm

Note

(1) MOQ: minimum order quantity

For technical questions, contact: sensorstechsupport@vishay.com

THIS DOCUMENT IS SUBJECT TO CHANGE WITHOUT NOTICE. THE PRODUCTS DESCRIBED HEREIN AND THIS DOCUMENT ARE SUBJECT TO SPECIFIC DISCLAIMERS, SET FORTH AT www.vishay.com/doc?91000

ABSOLUTE MAXIMUM RATINGS (T_{amb} = 25 °C, unless otherwise specified)					
PARAMETER	**TEST CONDITION**	**SYMBOL**	**MIN.**	**MAX.**	**UNIT**
Supply voltage		V_{DD}	0	3.6	V
Operation temperature range		T_{amb}	-40	+110	°C
Storage temperature range		T_{stg}	-40	+110	°C
Total power dissipation	$T_{amb} \leq 25$ °C	P_{tot}	-	50	mW
Junction temperature		T_j	-	110	°C

BASIC CHARACTERISTICS (T_{amb} = 25 °C, unless otherwise specified)						
PARAMETER	**TEST CONDITION**	**SYMBOL**	**MIN.**	**TYP.**	**MAX.**	**UNIT**
Supply voltage		V_{DD}	2.5	3.3	3.6	V
Supply current	Shut down current (1), $V_{DD} = V_{BUS}$	I_{DD}	-	0.5	-	µA
	Shut down current (1), $V_{DD} = V_{BUS}$ = 3.0 V		-	-	1.2	
	Shut down current (1), V_{DD} = 3.6 V, V_{BUS} = 1.7 V		-	3.1	-	
	Active state, V_{DD} = 3.3 V		-	280	-	
I²C clock rate range		f_{SCL}	10	-	400	kHz
I²C bus input H-level range	$V_{BUS} = V_{DD}$	V_{ih}	0.7 x V_{DD}	-	3.6	V
	$V_{BUS} \neq V_{DD}$	V_{ih}	0.85 x V_{BUS}	-	3.6	V
I²C bus input L-level range	$V_{BUS} = V_{DD}$	V_{il}	-0.3	-	0.3 x V_{DD}	V
	$V_{BUS} \neq V_{DD}$	V_{il}	-0.3	-	0.2 x V_{BUS}	V
Digital current out (low, current sink)		I_{ol}	3	-	-	mA
Digital resolution (LSB count) (2)	With ALS_GAIN = x 2, ALS_IT = 400 ms, ALS_PDDIV = 4/4 PD		-	0.0026	-	lx/step
Detectable maximum illuminance	With ALS_GAIN = x 0.5, ALS_IT = 6.25 ms, ALS_PDDIV = 1/4 PD	$E_{V\ max.}$	-	172 000	-	lx
ALS dark offset (1)	With ALS_GAIN = x 2, ALS_IT = 200 ms, ALS_PDDIV = 4/4 PD		-	4	-	step
IR dark offset (1)	With ALS_GAIN = x 2, ALS_IT = 200 ms, ALS_PDDIV = 4/4 PD		-	4	-	step

Notes

(1) Light conditions: dark

(2) Light conditions: E_V = 100 lx with 4300K white LED

CIRCUIT BLOCK DIAGRAM

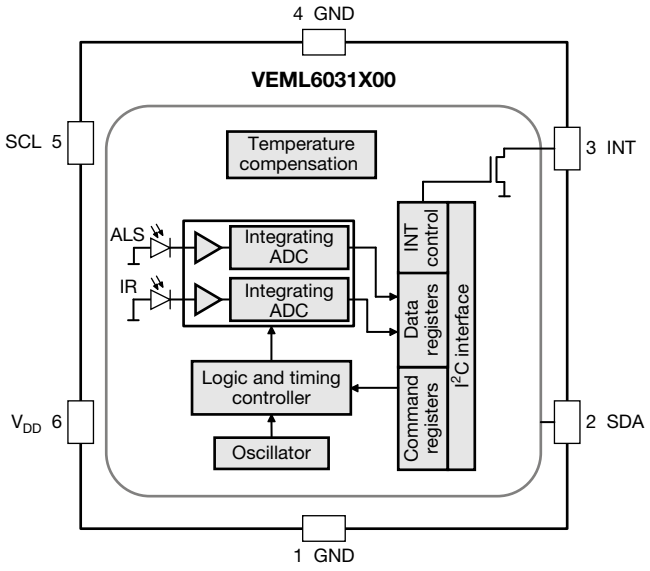

For technical questions, contact: sensorstechsupport@vishay.com

THIS DOCUMENT IS SUBJECT TO CHANGE WITHOUT NOTICE. THE PRODUCTS DESCRIBED HEREIN AND THIS DOCUMENT ARE SUBJECT TO SPECIFIC DISCLAIMERS, SET FORTH AT www.vishay.com/doc?91000

Fig. 1 - Block Diagram

I²C TIMING CHARACTERISTICS (T_{amb} = 25 °C, unless otherwise specified)						
PARAMETER	SYMBOL	STANDARD MODE [1]		FAST MODE [1]		UNIT
		MIN.	MAX.	MIN.	MAX.	
Clock frequency	$f_{(SMBCLK)}$	10	100	10	400	kHz
Bus free time between start and stop condition	$t_{(BUF)}$	4.7	-	1.3	-	µs
Hold time after (repeated) start condition; after this period, the first clock is generated	$t_{(HDSTA)}$	4.0	-	0.6	-	µs
Repeated start condition setup time	$t_{(SUSTA)}$	4.7	-	0.6	-	µs
Stop condition setup time	$t_{(SUSTO)}$	4.0	-	0.6	-	µs
Data hold time	$t_{(HDDAT)}$	0	3450	0	900	ns
Data setup time	$t_{(SUDAT)}$	250	-	100	-	ns
I²C clock (SCK) low period	$t_{(LOW)}$	4.7	-	1.3	-	µs
I²C clock (SCK) high period	$t_{(HIGH)}$	4.0	-	0.6	-	µs
Detect clock / data low timeout	$t_{(TIMEOUT)}$	25	35	-	-	ms
Clock / data fall time	$t_{(F)}$	-	300	-	300	ns
Clock / data rise time	$t_{(R)}$	-	1000	-	300	ns

Note

[1] Data based on standard I²C protocol requirement, not tested in production

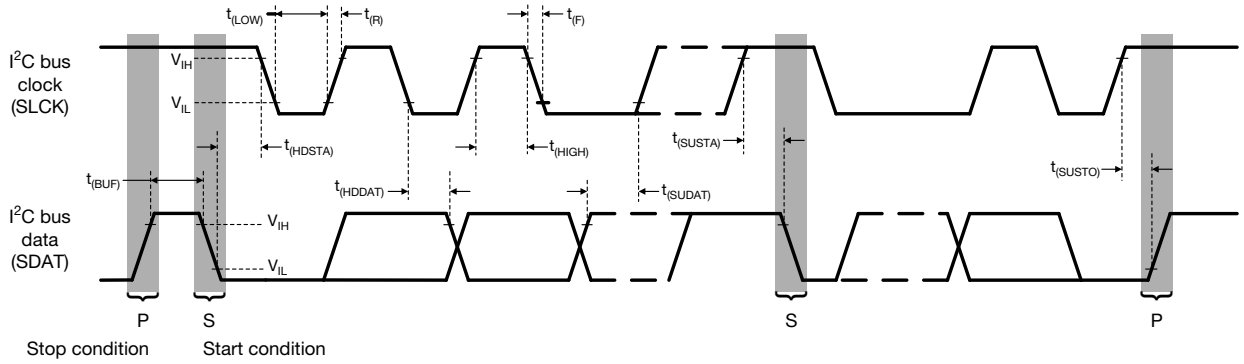

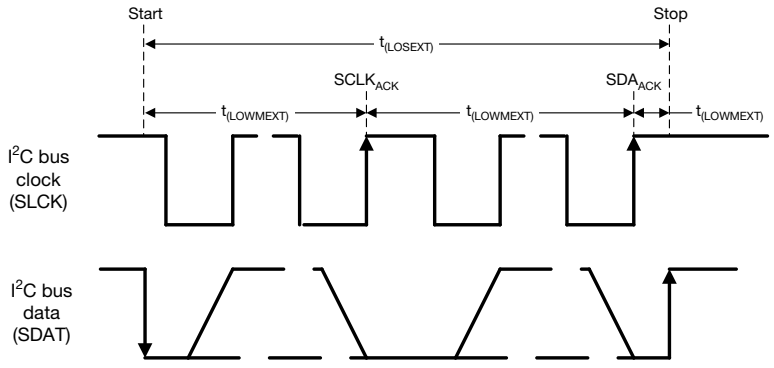

Fig. 2 - I²C Timing Diagram

For technical questions, contact: sensorstechsupport@vishay.com

THIS DOCUMENT IS SUBJECT TO CHANGE WITHOUT NOTICE. THE PRODUCTS DESCRIBED HEREIN AND THIS DOCUMENT ARE SUBJECT TO SPECIFIC DISCLAIMERS, SET FORTH AT www.vishay.com/doc?91000

PARAMETER TIMING INFORMATION

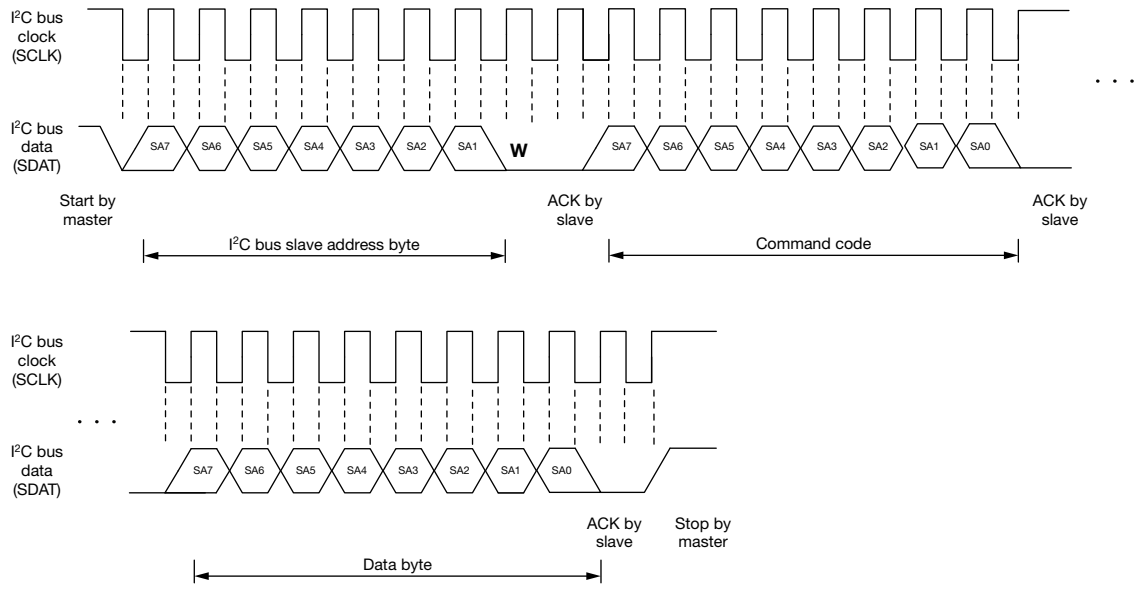

Fig. 3 - I²C Bus Timing for Sending Word Command Format

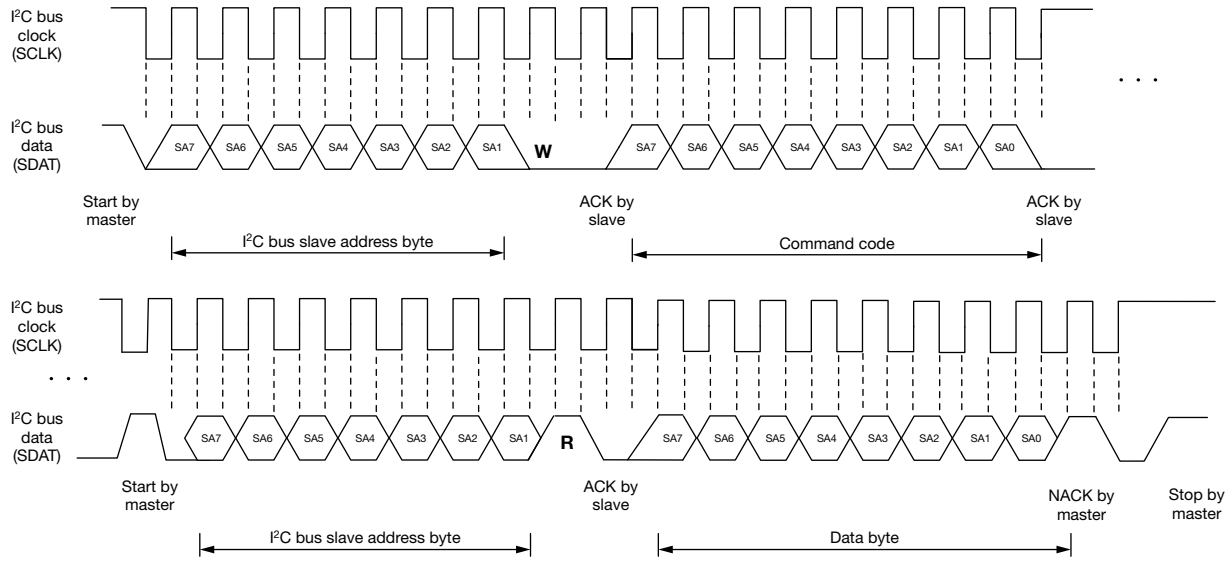

Fig. 4 - I²C Bus Timing for Receive Word Command Format

For technical questions, contact: sensorstechsupport@vishay.com
THIS DOCUMENT IS SUBJECT TO CHANGE WITHOUT NOTICE. THE PRODUCTS DESCRIBED HEREIN AND THIS DOCUMENT ARE SUBJECT TO SPECIFIC DISCLAIMERS, SET FORTH AT www.vishay.com/doc?91000

BASIC CHARACTERISTICS (T_{amb} = 25 °C, unless otherwise specified)

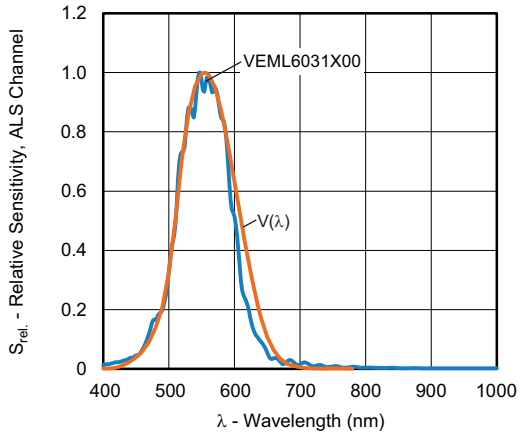

Fig. 5 - Relative Sensitivity, ALS Channel vs. Wavelength

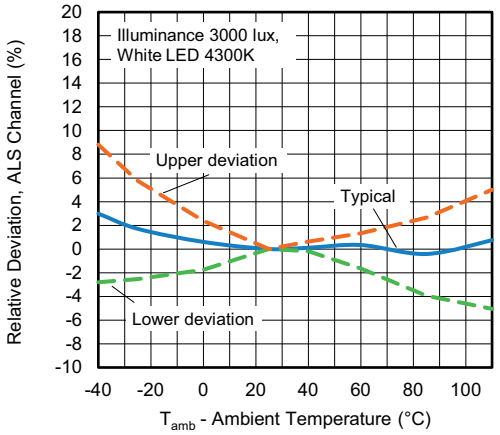

Fig. 8 - Relative Deviation, ALS Channel vs. Temperature (at lux levels lower than ~200 lux, dark current effects should be taken into account)

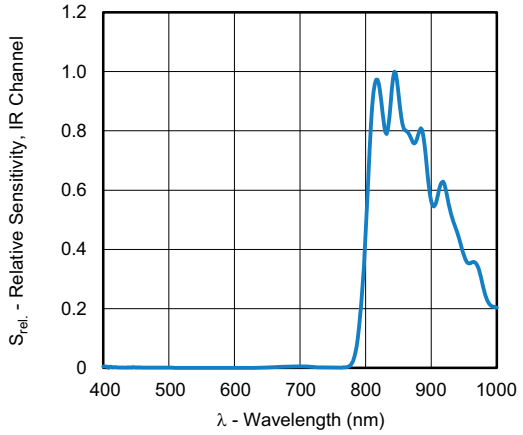

Fig. 6 - Relative Sensitivity, IR Channel vs. Wavelength

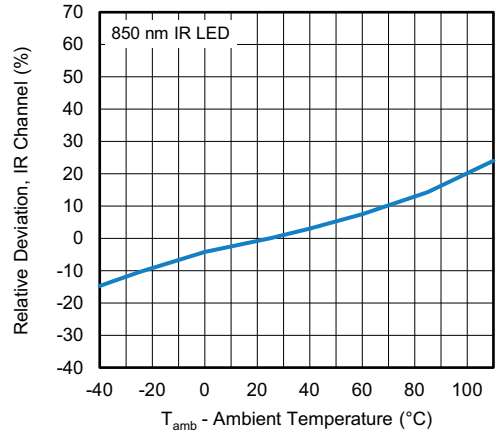

Fig. 9 - Relative Deviation IR Channel vs. Ambient Temperature

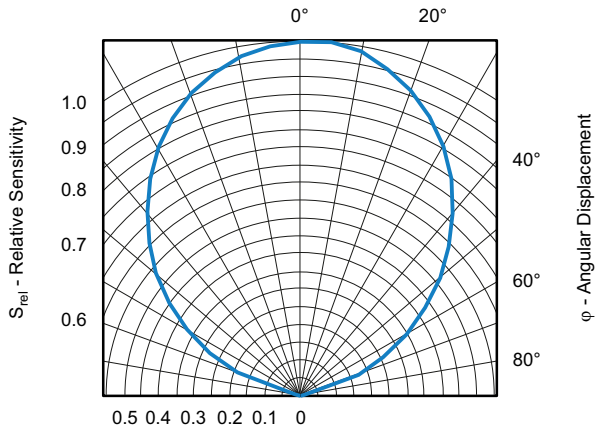

Fig. 7 - Relative Sensitivity vs. Angular Displacement

For technical questions, contact: sensorstechsupport@vishay.com
THIS DOCUMENT IS SUBJECT TO CHANGE WITHOUT NOTICE. THE PRODUCTS DESCRIBED HEREIN AND THIS DOCUMENT ARE SUBJECT TO SPECIFIC DISCLAIMERS, SET FORTH AT www.vishay.com/doc?91000

APPLICATION INFORMATION

1. Application Circuit

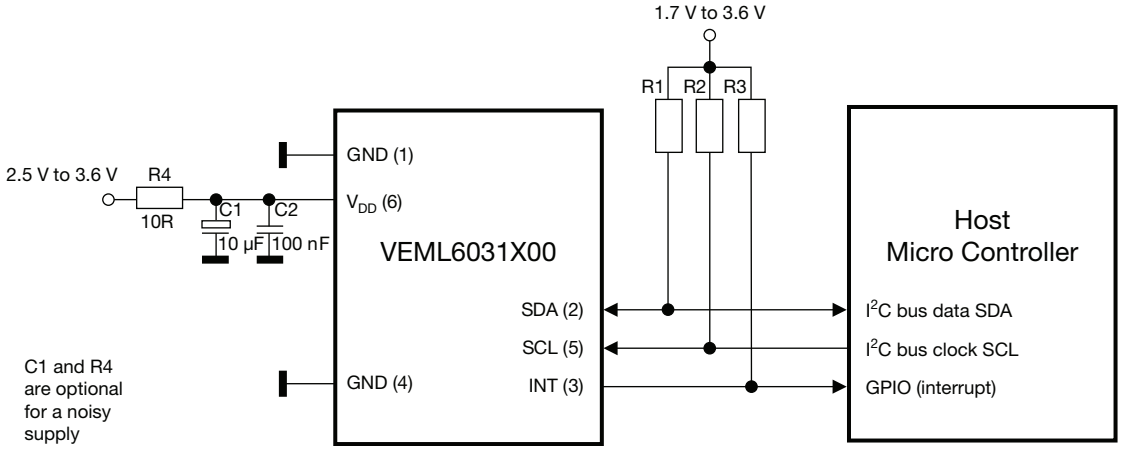

Fig. 10 - Application Circuit
(x) = Pin Number

Notes

- The interrupt pin is an open drain output. Proposed values for the pull-up resistors should be > 1 kΩ, e.g. 2.2 kΩ to 4.7 kΩ for the R1 and R2 (at SDA and SCL) and 10 kΩ to 100 kΩ for R3 (at interrupt).
- Normally just one decoupling capacitor is needed. This should be ≥ 100 nF and placed close to the V_{DD} pin.
  For detailed description about set-up and use of the interrupt as well as more application related information see AN: “Designing VEML6031X00 into an Application”.

2. I²C Write and Read Protocol

The VEML6031X00 has eighteen register addresses responsible for operation control, parameter setup and result buffering. All registers are accessible via I²C communication. Fig. 9 shows the basic I²C communication with VEML6031X00.

The built in I²C interface is compatible with I²C modes “standard” and “fast”: 10 kHz to 400 kHz.

Please refer to the I²C specification from NXP for details.

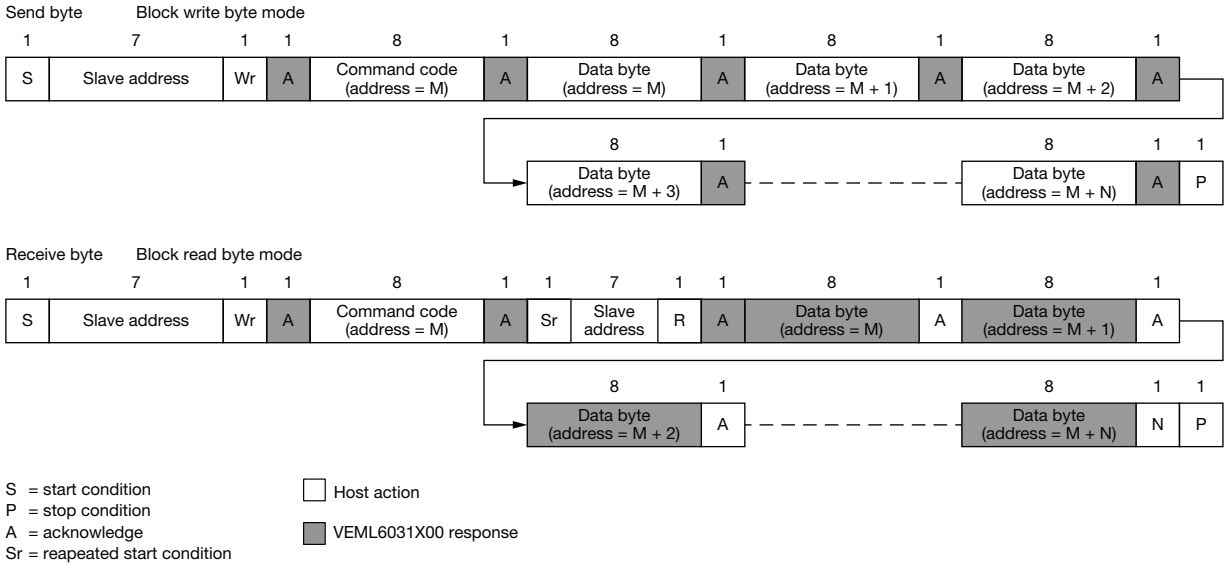

Fig. 11 - Send Byte / Receive Byte Protocol

For technical questions, contact: sensorstechsupport@vishay.com
THIS DOCUMENT IS SUBJECT TO CHANGE WITHOUT NOTICE. THE PRODUCTS DESCRIBED HEREIN AND THIS DOCUMENT ARE SUBJECT TO SPECIFIC DISCLAIMERS, SET FORTH AT www.vishay.com/doc?91000

REGISTER INFORMATION

Device Address

The VEML6031X00 is available in two different pre-configured slave addresses.

For one version the predefined 7 bit I²C bus address is set to 0101001 = 0x29. The least significant bit (LSB) defines read or write mode. Accordingly the bus address is set to 0101 0010 = 0x52 for write and 0101 0011 = 0x53 for read. The second version comes with predefined 7 bit I²C bus address of 0010000 = 0x10, so, here the write address is 0010 0000 = 0x20 for write and 0010 0001 = 0x21 for read.

TABLE 1 - SLAVE ADDRESS TABLE

ORDERING CODE	7 BIT SLAVE ADDRESS	8 BIT SLAVE ADDRESS	
VEML6031X00	0x29	0x52 (Write)	0x53 (Read)
VEML60311X00	0x10	0x20 (Write)	0x21 (Read)

Auto-Memorization

The VEML6031X00 stores the last measured ambient data before the device is shutdown, keeping the data accessible.

When VEML6031X00 is in shutdown mode, the host can freely read this data via read command directly.

When VEML6031X00 wakes up, the data will be refreshed once a new measurement is made.

Register Addresses

The VEML6031X00 has eighteen registers, accessible through there respective 8-bit command codes.

The registers are 0x00 to 0x17 (0x02 and 0x03, 0x08 to 0x0F and 0x16 are not defined / reserved). Note that due to the location of the bits ALS_ON_0 and ALS_ON_1, one in register 0x00 and the other in 0x01, it is necessary to always write to both registers at once when configuring the device.

TABLE 2 - COMMAND CODE AND REGISTER DESCRIPTION

COMMAND CODE	DATA BYTE LOW / HIGH	REGISTER NAME	DEFAULT VALUE	FUNCTION	ACCESS
0x00	-	ALS_CONF_0	0x01	Set the integration time	Write and read
				Measurement mode of the sensor	
				Enable interupt function of the ALS channel	
				Switch the sensor on / off	
0x01	-	ALS_CONF_1	0x80	Switch the sensor on / off	
				GAIN and photodiode size setting	
				Interrupt persistance counter	
0x04	Low	ALS_THDH_L	0x00	ALS channel high threshold window setting (low byte)	
0x05	High	ALS_THDH_H	0x00	ALS channel high threshold window setting (high byte)	
0x06	Low	ALS_THDL_L	0x00	ALS channel low threshold window setting (low byte)	
0x07	High	ALS_THDL_H	0x00	ALS channel low threshold window setting (high byte)	
0x10	Low	ALS_DATA_L	0x00	Low byte of 16-bit ALS channel result data	Read only
0x11	High	ALS_DATA_H	0x00	High byte of 16-bit ALS channel result data	
0x12	Low	IR_DATA_L	0x00	Low byte of 16-bit IR channel result data	
0x13	High	IR_DATA_H	0x00	High byte of 16-bit IR channel result data	
0x14	Low	VEML6031X00_ID_L	0x01	ID code	
0x15	High	VEML6031X00_ID_H	0x00	ID code	
0x16	Low	INT_FLAG_L	0x00	Reserved	
0x17	High	INT_FLAG_H	0x00	Interrupt and active force mode event flag	

Notes

- Command code 0x00 default value is 0x01 = device is shutdown
- Command 0x00 and command 0x01 must be executed together, they cannot be executed independently

For technical questions, contact: sensorstechsupport@vishay.com
THIS DOCUMENT IS SUBJECT TO CHANGE WITHOUT NOTICE. THE PRODUCTS DESCRIBED HEREIN AND THIS DOCUMENT ARE SUBJECT TO SPECIFIC DISCLAIMERS, SET FORTH AT www.vishay.com/doc?91000

TABLE 3 - REGISTER NAME: ALS_CONF_0							
Bit 7	Bit 6	Bit 5	Bit 4	Bit 3	Bit 2	Bit 1	Bit 0
Reserved	ALS_IT			ALS_MODE	ALS_TRIG	ALS_INT	ALS_ON_0
COMMAND CODE					0x00		
BIT NAME	FUNCTION			BIT	VALUE	DESCRIPTION	
Reserved	Reserved			7	0x0 (0b0)	Should be kept default	
ALS_IT	Set the integration time			6 : 4	0x0 (0b000)	3.125 ms (default)	
					0x1 (0b001)	6.25 ms	
					0x2 (0b010)	12.5 ms	
					0x3 (0b011)	25 ms	
					0x4 (0b100)	50 ms	
					0x5 (0b101)	100 ms	
					0x6 (0110)	200 ms	
					0x7 (0b111)	400 ms	
ALS_MODE	Set the measurement mode of the sensor			3	0x0 (0b0)	Auto mode (default)	
					0x1 (0b1)	Active force mode	
ALS_TRIG	Set the active force mode trigger; this bit will be reset to 0 after the measurement cycle			2	0x0 (0b0)	Off (default)	
					0x1 (0b1)	Trigger	
ALS_INT	Enable / disable the interrupt function of the ALS channel			1	0x0 (0b0)	Disable (default)	
					0x1 (0b1)	Enable	
ALS_ON_0	Switch the sensor on / off (ALS_ON_0 and ALS_ON_1 must be executed together to start the sensor)			0	0x0 (0b0)	Turn on the sensor	
					0x1 (0b1)	Turn off the sensor (shutdown) (default)	

Note

- Command Code 0x00 default value is 0x01 = device shutdown

TABLE 4 - REGISTER NAME: ALS_CONF_1							
Bit 7	Bit 6	Bit 5	Bit 4	Bit 3	Bit 2	Bit 1	Bit 0
ALS_ON_1	ALS_PDDIV	Reserved	ALS_GAIN		ALS_PERS		ALS_CAL
COMMAND CODE					0x01		
BIT NAME	FUNCTION			BIT	VALUE	DESCRIPTION	
ALS_ON_1	Switch the sensor on / off (ALS_ON_0 and ALS_ON_1 must be executed together to start the sensor)			7	0x0 (0b0)	Turn on the sensor	
					0x1 (0b1)	Turn off the sensor (shutdown) (default)	
ALS_PDDIV	Set the effective photodiode size for the ALS and IR channel			6	0x0 (0b0)	4/4 PD used	
					0x1 (0b1)	1/4 PD used	
Reserved	Reserved			5	0x0 (0b0)	Should be kept default	
ALS_GAIN	Set the gain of the ALS			4 : 3	0x0 (0b00)	Gain x1	
					0x1 (0b01)	Gain x2	
					0x2 (0b10)	Gain x0.66	
					0x3 (0b11)	Gain x0.5	
ALS_PERS	Set the amount of consecutive threshold crossing events necessary to trigger interrupt			2 : 1	0x0 (0b00)	1 time (default)	
					0x1 (0b01)	2 times	
					0x2 (0b10)	4 times	
					0x3 (0b11)	8 times	
ALS_CAL	Enable / disable internal calibration after power on			0	0x1 (0b1)	Enable (must be set to “1” when power on ready)	
					0x0 (0b0)	Disable (default)	

For technical questions, contact: sensorstechsupport@vishay.com
THIS DOCUMENT IS SUBJECT TO CHANGE WITHOUT NOTICE. THE PRODUCTS DESCRIBED HEREIN AND THIS DOCUMENT ARE SUBJECT TO SPECIFIC DISCLAIMERS, SET FORTH AT www.vishay.com/doc?91000

TABLE 5 - REGISTER NAME: ALS_THDH							
Bit 7	Bit 6	Bit 5	Bit 4	Bit 3	Bit 2	Bit 1	Bit 0
ALS_THDH_L							
Bit 7	Bit 6	Bit 5	Bit 4	Bit 3	Bit 2	Bit 1	Bit 0
ALS_THDH_H							
COMMAND	**BIT NAME**	**FUNCTION**		**BIT**	**VALUE**	**DESCRIPTION**	
0x04	ALS_THDH_L	Set the high threshold interrupt value		7 : 0	0 to 65 535	Low byte	
0x05	ALS_THDH_H			7 : 0		High byte	

TABLE 6 - REGISTER NAME: ALS_THDL							
Bit 7	Bit 6	Bit 5	Bit 4	Bit 3	Bit 2	Bit 1	Bit 0
ALS_THDL_L							
Bit 7	Bit 6	Bit 5	Bit 4	Bit 3	Bit 2	Bit 1	Bit 0
ALS_THDL_H							
COMMAND	**BIT NAME**	**FUNCTION**		**BIT**	**VALUE**	**DESCRIPTION**	
0x06	ALS_THDL_L	Set the low threshold interrupt value		7 : 0	0 to 65 535	Low byte	
0x07	ALS_THDL_H			7 : 0		High byte	

TABLE 7 - REGISTER NAME: ALS_DATA							
Bit 7	Bit 6	Bit 5	Bit 4	Bit 3	Bit 2	Bit 1	Bit 0
ALS_DATA_L							
Bit 7	Bit 6	Bit 5	Bit 4	Bit 3	Bit 2	Bit 1	Bit 0
ALS_DATA_H							
COMMAND	**BIT NAME**	**FUNCTION**		**BIT**	**VALUE**	**DESCRIPTION**	
0x10	ALS_DATA_L	Read the ALS channel output data		7 : 0	0 to 65 535	Low byte	
0x11	ALS_DATA_H			7 : 0		High byte	

TABLE 8 - REGISTER NAME: IR_DATA							
Bit 7	Bit 6	Bit 5	Bit 4	Bit 3	Bit 2	Bit 1	Bit 0
IR_DATA_L							
Bit 7	Bit 6	Bit 5	Bit 4	Bit 3	Bit 2	Bit 1	Bit 0
IR_DATA_H							
COMMAND	**BIT NAME**	**FUNCTION**		**BIT**	**VALUE**	**DESCRIPTION**	
0x12	IR_DATA_L	Read the IR channel output data		7 : 0	0 to 65 535	Low byte	
0x13	IR_DATA_H			7 : 0		High byte	

TABLE 9 - REGISTER NAME: VEML6031X00_ID							
Bit 7	Bit 6	Bit 5	Bit 4	Bit 3	Bit 2	Bit 1	Bit 0
VEML6031X00_ID_L							
Bit 7	Bit 6	Bit 5	Bit 4	Bit 3	Bit 2	Bit 1	Bit 0
VEML6031X00_ID_H							
COMMAND	**BIT NAME**	**FUNCTION**		**BIT**	**VALUE**	**DESCRIPTION**	
0x14	VEML6031X00_ID_L	Read the device ID		7 : 0	0x01 (0b00000001)	Should be kept default	
0x15	VEML6031X00_ID_H			7 : 0	0x00 (0b00000000)	Device with a slave address of 0x29	
					0x10 (0b00010000)	Device with a slave address of 0x10	

For technical questions, contact: sensorstechsupport@vishay.com
THIS DOCUMENT IS SUBJECT TO CHANGE WITHOUT NOTICE. THE PRODUCTS DESCRIBED HEREIN AND THIS DOCUMENT ARE SUBJECT TO SPECIFIC DISCLAIMERS, SET FORTH AT www.vishay.com/doc?91000

TABLE 10 - REGISTER NAME: INT_FLAG							
Bit 7	Bit 6	Bit 5	Bit 4	Bit 3	Bit 2	Bit 1	Bit 0
Reserved							
Bit 7	Bit 6	Bit 5	Bit 4	Bit 3	Bit 2	Bit 1	Bit 0
Reserved				AF_DATA_READY	ALS_IF_L	ALS_IF_H	Reserved

COMMAND	BIT NAME	FUNCTION	BIT	VALUE	DESCRIPTION
0x16	Reserved	Reserved	7 : 0	0x00 (0b00000000)	Should be kept default
0x17	Reserved	Reserved	7 : 4	0x0 (0b0000)	Should be kept default
	AF_DATA_READY	Data ready flag active force mode	3	0x1 (0b1)	Data ready flag available
				0x0 (0b0)	Data ready flag not available
	ALS_IF_L	Low threshold interupt flag	2	0x1 (0b1)	Low threshold crossing interrupt event flag for the ALS channel
				0x0 (0b0)	No low threshold crossing
	ALS_IF_H	High threshold interupt flag	1	0x1 (0b1)	High threshold crossing interrupt event flag for the ALS channel
				0x0 (0b0)	No high threshold crossing
	Reserved	Reserved	0	0x0 (0b0)	Should be kept default

CALCULATING THE LUX LEVEL

Command code 0x10 and 0x11 contain the results of the ALS measurement. This 16-bit code needs to be converted to a decimal value to determine the corresponding lux value. The calculation of the corresponding lux level is dependent on the programmed gain setting and the chosen integration time.

TABLE 11 - RESOLUTION AND MAXIMUM DETECTION RANGE AT ALS_PDDIV (4/4 PD USED)								
	TYPICAL RESOLUTION (lx/cnt)					MAXIMUM POSSIBLE ILLUMINATION (lx)			
	ALS_GAIN					ALS_GAIN			
IT (ms)	x2	x1	x0.66	x0.5		x2	x1	x0.66	x0.5
400	0.0026	0.0051	0.0078	0.0103		168	337	510	673
200	0.0051	0.0103	0.0156	0.0205		337	673	1020	1346
100	0.0103	0.0205	0.0311	0.0411		673	1346	2040	2693
50	0.0205	0.0411	0.0623	0.0822		1346	2693	4080	5385
25	0.0411	0.0822	0.1245	0.1644		2693	5385	8160	10 771
12.5	0.0822	0.1644	0.2490	0.3287		5385	10 771	16 319	21 542
6.25	0.1644	0.3287	0.4980	0.6574		10 771	21 542	32 639	43 083
3.125	0.3287	0.6574	0.9961	1.3148		(-) (1)	(-) (1)	(-) (1)	(-) (1)

TABLE 12 - RESOLUTION AND MAXIMUM DETECTION RANGE AT ALS_PDDIV (1/4 PD USED)								
	TYPICAL RESOLUTION (lx/cnt)					MAXIMUM POSSIBLE ILLUMINATION (lx)			
	ALS_GAIN					ALS_GAIN			
IT (ms)	x2	x1	x0.66	x0.5		x2	x1	x0.66	x0.5
400	0.0103	0.0205	0.0311	0.0411		673	1346	2040	2693
200	0.0205	0.0411	0.0623	0.0822		1346	2693	4080	5385
100	0.0411	0.0822	0.1245	0.1644		2693	5385	8160	10 771
50	0.0822	0.1644	0.2490	0.3287		5385	10 771	16 319	21 542
25	0.1644	0.3287	0.4980	0.6574		10 771	21 542	32 639	43 083
12.5	0.3287	0.6574	0.9961	1.3148		21 542	43 083	65 278	86 166
6.25	0.6574	1.3148	1.9921	2.6296		43 083	86 166	130 555	172 333
3.125	1.3148	2.6296	3.9843	5.2593		(-) (1)	(-) (1)	(-) (1)	(-) (1)

Note

(1) For integration time of 3.125 ms the maximum count level is no longer 16 bit, so, half the integration time no longer leads to double the max. lux level

For technical questions, contact: sensorstechsupport@vishay.com
THIS DOCUMENT IS SUBJECT TO CHANGE WITHOUT NOTICE. THE PRODUCTS DESCRIBED HEREIN AND THIS DOCUMENT ARE SUBJECT TO SPECIFIC DISCLAIMERS, SET FORTH AT www.vishay.com/doc?91000

HANDLING INSTRUCTION

Special care must be taken into consideration when handling the VEML6031X00. VEML6031X00 is sensitive to dust and scratches, proper optical device handling procedures are recommended.

The optical surface of the device must be kept clean for optimal performance in both prototyping with the device and mass production manufacturing procedures. Tweezers with plastic or rubber contact surfaces are recommended to avoid scratches on the optical surface. Avoid manipulation with metal tools when possible. The optical surface must be kept clean of fingerprints, dust, and other optical-inhibiting contaminants.

If the device optical surface requires cleaning, the use of isopropyl alcohol is recommended. A few gentle brushes with a soft swab are appropriate. Avoid potentially abrasive cleaning and manipulating tools and excessive force that can scratch the optical surface.

If the VEML6031X00 performs less than optimally, inspect the optical surface for dirt, scratches, or other optical artifacts.

For technical questions, contact: sensorstechsupport@vishay.com
THIS DOCUMENT IS SUBJECT TO CHANGE WITHOUT NOTICE. THE PRODUCTS DESCRIBED HEREIN AND THIS DOCUMENT ARE SUBJECT TO SPECIFIC DISCLAIMERS, SET FORTH AT www.vishay.com/doc?91000

PACKAGE DIMENSIONS in millimeters

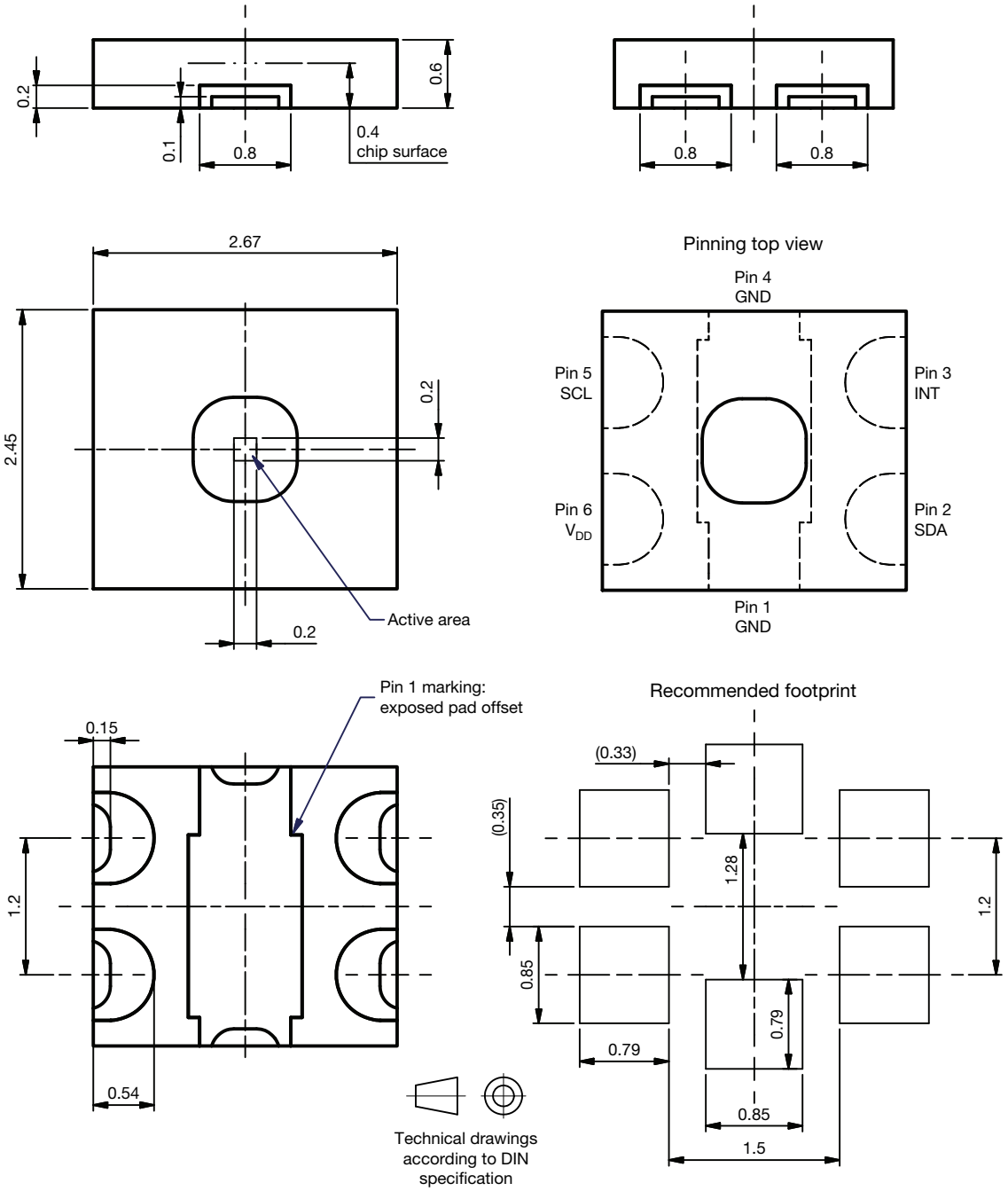

Drawing No.: 6.550-5357.01-4
Issue: 1; 14.04.2021

All dimensions in mm incl. burrs
Not indicated tolerances ± 0.1

For technical questions, contact: sensorstechsupport@vishay.com
THIS DOCUMENT IS SUBJECT TO CHANGE WITHOUT NOTICE. THE PRODUCTS DESCRIBED HEREIN AND THIS DOCUMENT ARE SUBJECT TO SPECIFIC DISCLAIMERS, SET FORTH AT www.vishay.com/doc?91000

MARKING AND PIN 1 IDENTIFICATION

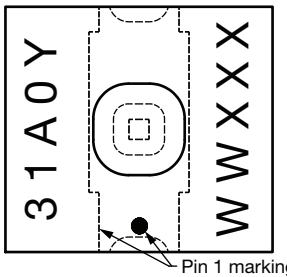

31: device type
A: address option (0, 1)
0: qualification (0 = AEC-Q100)

Pin 1 marking
dot marking on top side
elongated feature on bottom side

Y: year
WW: week
XXX: lot number

TAPE AND REEL DIMENSIONS in millimeters

Reel size:
VEML6031: Ø 180 mm ± 2 mm = 3000 pcs.
VEML6031-GS 15: Ø 330 mm ± 2 mm = 10 000 pcs.
Reel design is representative for different types.

Technical drawings according to DIN specification

Non tolerated tolerances ± 0.1 mm

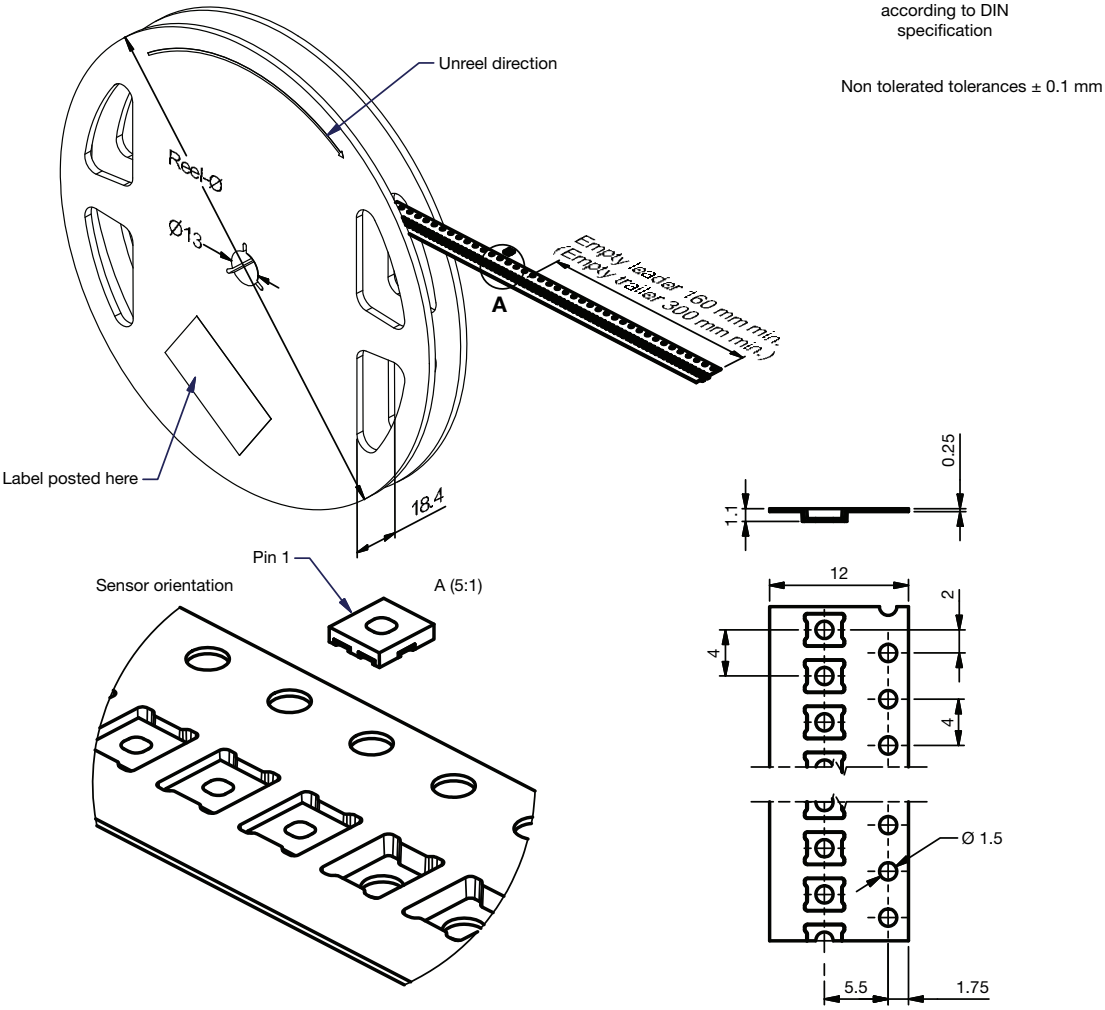

Drawing No.: 9.800-5148.01-4
Issue: 2; 28.05.21

For technical questions, contact: sensorstechsupport@vishay.com
THIS DOCUMENT IS SUBJECT TO CHANGE WITHOUT NOTICE. THE PRODUCTS DESCRIBED HEREIN AND THIS DOCUMENT ARE SUBJECT TO SPECIFIC DISCLAIMERS, SET FORTH AT www.vishay.com/doc?91000

DRYPACK

Devices are packed in moisture barrier bags (MBB) to prevent the products from moisture absorption during transportation and storage. Each bag contains a desiccant.

FLOOR LIFE

Floor life (time between soldering and removing from MBB) must not exceed the time indicated on MBB label:

Floor life: 4 weeks

Conditions: T_{amb} < 30 °C, RH < 60 %

Moisture sensitivity level 2a, according to J-STD-020.

DRYING

In case of moisture absorption devices should be baked before soldering. Conditions see J-STD-020 or label. Devices taped on reel dry using recommended conditions 192 h at 40 °C (+ 5 °C), RH < 5 %.

REFLOW SOLDER PROFILE

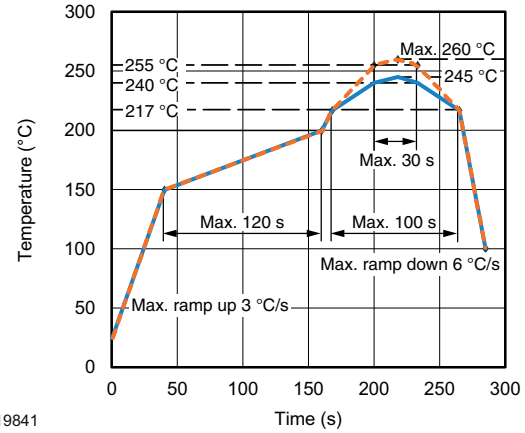

Fig. 12 - Lead (Pb)-free Reflow Solder Profile According to J-STD-020

For technical questions, contact: sensorstechsupport@vishay.com
THIS DOCUMENT IS SUBJECT TO CHANGE WITHOUT NOTICE. THE PRODUCTS DESCRIBED HEREIN AND THIS DOCUMENT ARE SUBJECT TO SPECIFIC DISCLAIMERS, SET FORTH AT www.vishay.com/doc?91000

REVISION HISTORY		
DATASHEET VERSION	**REVISION DATE**	**CHANGE**
1.4	18-Dec-2025	Corrected resolution, removed “Dark Current Offset vs. Ambient Temperature” figure, revised bit naming, revised block diagram, rearranged part handling information

For technical questions, contact: sensorstechsupport@vishay.com
THIS DOCUMENT IS SUBJECT TO CHANGE WITHOUT NOTICE. THE PRODUCTS DESCRIBED HEREIN AND THIS DOCUMENT ARE SUBJECT TO SPECIFIC DISCLAIMERS, SET FORTH AT www.vishay.com/doc?91000

Disclaimer

ALL PRODUCT, PRODUCT SPECIFICATIONS AND DATA ARE SUBJECT TO CHANGE WITHOUT NOTICE TO IMPROVE RELIABILITY, FUNCTION OR DESIGN OR OTHERWISE.

Vishay Intertechnology, Inc., its affiliates, agents, and employees, and all persons acting on its or their behalf (collectively, “Vishay”), disclaim any and all liability for any errors, inaccuracies or incompleteness contained in any datasheet or in any other disclosure relating to any product.

Vishay makes no warranty, representation or guarantee regarding the suitability of the products for any particular purpose or the continuing production of any product. To the maximum extent permitted by applicable law, Vishay disclaims (i) any and all liability arising out of the application or use of any product, (ii) any and all liability, including without limitation special, consequential or incidental damages, and (iii) any and all implied warranties, including warranties of fitness for particular purpose, non-infringement and merchantability.

Statements regarding the suitability of products for certain types of applications are based on Vishay's knowledge of typical requirements that are often placed on Vishay products in generic applications. Such statements are not binding statements about the suitability of products for a particular application. It is the customer's responsibility to validate that a particular product with the properties described in the product specification is suitable for use in a particular application. Parameters provided in datasheets and / or specifications may vary in different applications and performance may vary over time. All operating parameters, including typical parameters, must be validated for each customer application by the customer's technical experts. Product specifications do not expand or otherwise modify Vishay's terms and conditions of purchase, including but not limited to the warranty expressed therein.

Hyperlinks included in this datasheet may direct users to third-party websites. These links are provided as a convenience and for informational purposes only. Inclusion of these hyperlinks does not constitute an endorsement or an approval by Vishay of any of the products, services or opinions of the corporation, organization or individual associated with the third-party website. Vishay disclaims any and all liability and bears no responsibility for the accuracy, legality or content of the third-party website or for that of subsequent links.

Vishay products are not designed for use in life-saving or life-sustaining applications or any application in which the failure of the Vishay product could result in personal injury or death unless specifically qualified in writing by Vishay. Customers using or selling Vishay products not expressly indicated for use in such applications do so at their own risk. Please contact authorized Vishay personnel to obtain written terms and conditions regarding products designed for such applications.

No license, express or implied, by estoppel or otherwise, to any intellectual property rights is granted by this document or by any conduct of Vishay. Product names and markings noted herein may be trademarks of their respective owners.

© 2026 VISHAY INTERTECHNOLOGY, INC. ALL RIGHTS RESERVED

THIS DOCUMENT IS SUBJECT TO CHANGE WITHOUT NOTICE. THE PRODUCTS DESCRIBED HEREIN AND THIS DOCUMENT ARE SUBJECT TO SPECIFIC DISCLAIMERS, SET FORTH AT www.vishay.com/doc?91000