Infrared Transceiver, 9.6 kbit/s to 115.2 kbit/s (SIR) for IrDA® Applications



20206-1

DESCRIPTION

TFBS4652 is an infrared transceiver that supports data rates up to 115 kbit/s per the IrDA standard. The link distance is up to 1 meter. The transceiver includes a PIN photodiode, an infrared emitter, and a low power control IC. These components have not been qualified according to automotive specifications.

FEATURES

- Compliant to the IrDA physical layer specification
- Standard IrDA link distance of 1 m
- Low power consumption, typically less than 70 µA
- Less than 1 µA in shutdown mode
- Adjustable to logic I/O voltage swing from 1.5 V to 5.5 V
- Material categorization: for definitions of compliance please see www.vishay.com/doc?99912

Pb-free

e4

RoHS COMPLIANT

HALOGEN FREE

GREEN (5-2008)

APPLICATIONS

- Short-distance wireless communication and data transfer
- Use in environments where RF is problematic

LINKS TO ADDITIONAL RESOURCES

Product Page

Related Documents

DESIGN SUPPORT TOOLS

- 3D model
- Window size calculator
- Symbols and terminology
- IRDC protocol
- Reference layouts and circuit diagrams

FUNCTIONAL BLOCK DIAGRAM

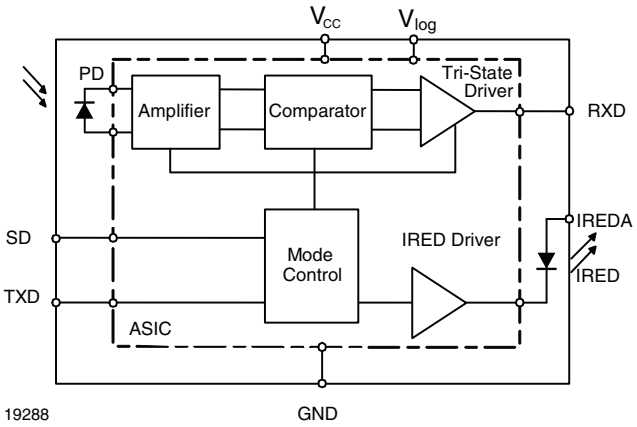

For technical questions within your region: irdasupportAM@vishay.com, irdasupportAP@vishay.com, irdasupportEU@vishay.com

THIS DOCUMENT IS SUBJECT TO CHANGE WITHOUT NOTICE. THE PRODUCTS DESCRIBED HEREIN AND THIS DOCUMENT ARE SUBJECT TO SPECIFIC DISCLAIMERS, SET FORTH AT www.vishay.com/doc?91000

PRODUCT SUMMARY					
PART NUMBER	DATA RATE (kbit/s)	DIMENSIONS H x L x W (mm x mm x mm)	LINK DISTANCE (m)	OPERATING VOLTAGE (V)	IDLE SUPPLY CURRENT (mA)
TFBS4652	115.2	1.6 x 6.8 x 2.8	0 to ≥ 1	2.4 to 5.5	0.07

PARTS TABLE		
PART	DESCRIPTION	QTY/REEL
TFBS4652-TR1	Oriented in carrier tape for side view surface mounting	1000 pcs
TFBS4652-TR3	Oriented in carrier tape for side view surface mounting	2500 pcs
TFBS4652-TT1	Oriented in carrier tape for top view surface mounting	1000 pcs

PIN DESCRIPTION				
PIN NUMBER	SYMBOL	DESCRIPTION	I/O	ACTIVE
1	IREDA	IRED anode, connected via a current limiting resistor to V_{CC2}. A separate unregulated power supply can be used.		
2	RXD	Receiver output. Normally high, goes low for a defined pulse duration with the rising edge of the optical input signal. Output is a CMOS tri-state driver, which swings between ground and V_{logic}. Receiver echoes transmitter output.	O	Low
3	TXD	Transmitter data input. Setting this input above the threshold turns on the transmitter. This input switches the IRED with the maximum transmit pulse width of about 100 µs.	I	High
4	SD	Shutdown. Logic low at this input enables the receiver, enables the transmitter, and un-tri-states the receiver output. It must be driven high for shutting down the transceiver.	I	High
5	V_{logic}	Reference for the logic swing of the output and the input logic levels.	I	
6	V_{CC}	Power supply, 2.4 V to 5.5 V. This pin provides power for the receiver and transmitter drive section. Connect V_{CC1} via an optional filter.		
7	GND	Ground		

PINOUT

TFBS4652, bottom view
weight 0.04 g

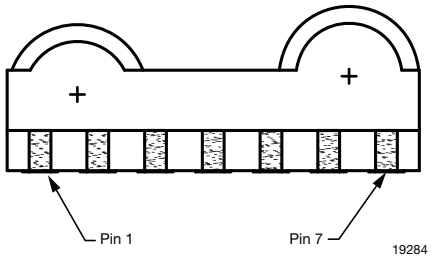

For technical questions within your region: irdasupportAM@vishay.com, irdasupportAP@vishay.com, irdasupportEU@vishay.com
THIS DOCUMENT IS SUBJECT TO CHANGE WITHOUT NOTICE. THE PRODUCTS DESCRIBED HEREIN AND THIS DOCUMENT ARE SUBJECT TO SPECIFIC DISCLAIMERS, SET FORTH AT www.vishay.com/doc?91000

ABSOLUTE MAXIMUM RATINGS

PARAMETER	TEST CONDITIONS	SYMBOL	MIN.	TYP.	MAX.	UNIT
Supply voltage range, transceiver	-0.3 V < V_{CC2} < 6 V	V_{CC1}	-0.5	-	6	V
Supply voltage range, transmitter	-0.5 V < V_{CC1} < 6 V	V_{CC2}	-0.5	-	6	V
Supply voltage range, digital supply	-0.5 V < V_{CC1} < 6 V	V_{logic}	-0.5	-	6	V
Voltage at RXD	All states	V_{IN}	-0.5	-	V_{logic} + 0.5	V
Input voltage range, transmitter TXD	Independent of V_{dd} or V_{logic}	V_{IN}	-0.5	-	6	V
Input currents	For all pins, except IRED anode pin	I_{CC}	-	-	10	mA
Output sinking current			-	-	25	mA
Power dissipation		P_D	-	-	250	mW
Junction temperature		T_J	-	-	125	°C
Ambient temperature range (operating)		T_{amb}	-25	-	+85	°C
Storage temperature		T_{stg}	-25	-	+85	°C
Soldering temperature	See section “Recommended Solder Profile”		-	-	260	°C
Repetitive pulse output current	< 90 µs, t_{on} < 20 %	I_{IRED} (RP)	-	-	430	mA
Average output current (transmitter)		I_{IRED} (DC)	-	-	85	mA
ESD protection	JESD22-A114	V_{ESD}	2	-	-	kV
Latchup	JESD78		|± 100|	-	-	mA
Thermal resistance junction to ambient	JESD51	R_{thJA}	-	300	-	K/W

Note

- Reference point ground unless otherwise noted. Typical values are for DESIGN AID ONLY, not guaranteed nor subject to production testing

EYE SAFETY INFORMATION

STANDARD	CLASSIFICATION
IEC/EN 60825-1 (2007-03), DIN EN 60825-1 (2008-05) “SAFETY OF LASER PRODUCTS - Part 1: equipment classification and requirements”, simplified method	Class 1
IEC 62471 (2006), CIE S009 (2002) “Photobiological Safety of Lamps and Lamp Systems”	Exempt
DIRECTIVE 2006/25/EC OF THE EUROPEAN PARLIAMENT AND OF THE COUNCIL of 5th April 2006 on the minimum health and safety requirements regarding the exposure of workers to risks arising from physical agents (artificial optical radiation) (19th individual directive within the meaning of article 16(1) of directive 89/391/EEC)	Exempt

Note

- Vishay transceivers operating inside the absolute maximum ratings are classified as eye safe according the above table

For technical questions within your region: irdasupportAM@vishay.com, irdasupportAP@vishay.com, irdasupportEU@vishay.com

THIS DOCUMENT IS SUBJECT TO CHANGE WITHOUT NOTICE. THE PRODUCTS DESCRIBED HEREIN AND THIS DOCUMENT ARE SUBJECT TO SPECIFIC DISCLAIMERS, SET FORTH AT www.vishay.com/doc?91000

ELECTRICAL CHARACTERISTICS (T_{amb} = 25 °C, V_{CC} = 2.4 V to 5.5 V unless otherwise noted)						
PARAMETER	**TEST CONDITIONS**	**SYMBOL**	**MIN.**	**TYP.**	**MAX.**	**UNIT**
TRANSCEIVER						
Supply voltage range		V_{CC}	2.4	-	5.5	V
Dynamic supply current						
Idle supply current at V_{CC1} (receive mode, no signal)	SD = low, T_{amb} = -25 °C to +85 °C independent of ambient light, V_{CC1} = V_{CC2} = 2.4 V to 5.5 V	I_{CC1}	40	70	110	µA
Peak supply current during transmission	SD = low, TXD = high	I_{ccpk}	-	2	3	mA
Idle, dark ambient at V_{logic} - pin	SD = low (< 0.8 V), E_{eamb} = 0 klx, E_e < 4 mW/m²	I_{logic}	-	-	1	µA
Shutdown supply current, dark ambient	SD = high (> V_{logic} - 0.5 V), T = 25 °C, E_e = 0 klx	I_{SD}	-	-	0.1	µA
	SD = high (> V_{logic} - 0.5 V), T = 85 °C, E_e = 0 klx	I_{SD}	-	-	1	µA
Output voltage low	I_{OL} = 0.2 mA, V_{CC} = 2.4 V, C_{load} = 15 pF	V_{OL}	-	-	0.15 x V_{CC1}	V
Output voltage high	I_{OL} = 0.2 mA, V_{CC} = 2.4 V, C_{load} = 15 pF	V_{OH}	0.8 x V_{logic}	-	-	V
RXD to V_{logic} pull-up impedance	SD = high (> V_{logic} - 0.5 V)	R_{RXD}	-	500	-	kΩ
Input voltage low (TXD, SD)		V_{ILo}	-0.3	-	0.4	V
Input voltage high (TXD, SD)	V_{CC} = 2.4 V to 5.5 V	V_{IHi}	V_{logic} - 0.5	-	6	V
Input voltage threshold SD	V_{CC} = 2.4 V to 5.5 V		0.9	0.5 x V_{logic}	0.66 x V_{logic}	V
Input capacitance (TXD, SD)		C_I	-	-	6	pF

Note

- Typical values are for DESIGN AID ONLY, not guaranteed nor subject to production testing

For technical questions within your region: irdasupportAM@vishay.com, irdasupportAP@vishay.com, irdasupportEU@vishay.com
THIS DOCUMENT IS SUBJECT TO CHANGE WITHOUT NOTICE. THE PRODUCTS DESCRIBED HEREIN AND THIS DOCUMENT ARE SUBJECT TO SPECIFIC DISCLAIMERS, SET FORTH AT www.vishay.com/doc?91000

OPTOELECTRONIC CHARACTERISTICS

PARAMETER	TEST CONDITIONS	SYMBOL	MIN.	TYP.	MAX.	UNIT
RECEIVER						
Sensitivity: minimum irradiance E_e in angular range (1)	9.6 kbit/s to 115.2 kbit/s λ = 850 nm to 900 nm	E_e	-	40	81	mW/m^2
Maximum irradiance E_e in angular range (2)	λ = 850 nm to 900 nm	E_e	2	-	-	kW/m^2
No output receiver input irradiance (3)	According to IrDA IrPHY 1.4, appendix A1, fluorescent light specification	E_e	4	-	-	mW/m^2
Rise time of output signal	10 % to 90 %, C_L = 15 pF	$t_{r\ (RXD)}$	20	-	100	ns
Fall time of output signal	90 % to 10 %, C_L = 15 pF	$t_{f\ (RXD)}$	20	-	100	ns
RXD pulse width of output signal, 50 % (4)	Input pulse width 1.63 µs	t_{PW}	1.7	-	2.9	µs
Receiver start up time	Power on delay		-	100	150	µs
Latency		t_L	30	50	100	µs
TRANSMITTER						
IRED operating current, current controlled	The IRED current is internally controlled but also can be reduced by an external resistor R_1 (5)	I_D	200	300	430	mA
Forward voltage of built-in IRED	I_F = 300 mA	V_F	1.4	1.8	1.9	V
Output leakage IRED current	TXD = 0 V, 0 < V_{CC1} < 5.5 V	I_{IRED}	-1	0.01	1	µA
Output radiant intensity (5)	a = 0°, 15°, TXD = high, SD = low, R_1 = 0 Ω	I_e	40	250	400	mW/sr
Output radiant intensity	V_{CC1} = 5 V, a = 0°, 15° TXD = low or SD = high (receiver is inactive as long as SD = high)	I_e	-	-	0.04	mW/sr
Saturation voltage of IRED driver	V_{CC} = 3 V, I_F = 50 mA	V_{CEsat}	-	0.4	-	V
Peak - emission wavelength		λ_p	870	-	910	nm
Spectral bandwidth		$\Delta\lambda$	-	45	-	nm
Optical rise time, optical fall time		t_{ropt}, t_{fopt}	10	50	300	ns
Optical output pulse duration	Input pulse width 1.6 < t_{TXD} < 23 µs	t_{opt}	t_{TXD} - 0.15	-	t_{TXD} + 0.15	µs
	Input pulse width t_{TXD} ≥ 23 µs	t_{opt}	23	50	100	µs
Optical overshoot			-	-	25	%

Notes

- T_{amb} = 25 °C, V_{CC} = 2.4 V to 5.5 V unless otherwise noted. Typical values are for design aid only, not guaranteed nor subject to production testing

(1) IrDA sensitivity definition: minimum irradiance E_e in angular range, power per unit area. The receiver must meet the BER specification while the source is operating at the minimum intensity in angular range into the minimum half-angular range at the maximum link length

(2) Maximum irradiance E_e in angular range, power per unit area. The optical delivered to the detector by a source operating at the maximum intensity in angular range at minimum link length must not cause receiver overdrive distortion and possible related link errors. If placed at the active output interface reference plane of the transmitter, the receiver must meet its bit error ratio (BER) specification. For more definitions see the document “Symbols and Terminology” on the Vishay website

(3) This parameter reflects the backlight test of the IrDA physical layer specification to guarantee immunity against light from fluorescent lamps

(4) RXD output is edge triggered by the rising edge of the optical input signal. The output pulse duration is independent of the input pulse duration

(5) The radiant intensity can be adjusted by the external current limiting resistor to adapt the intensity to the desired value. The given value is for maximum link distance operating the transceiver without current control resistor (R_1 = 0 Ω) and using the internal current control

For technical questions within your region: irdasupportAM@vishay.com, irdasupportAP@vishay.com, irdasupportEU@vishay.com
THIS DOCUMENT IS SUBJECT TO CHANGE WITHOUT NOTICE. THE PRODUCTS DESCRIBED HEREIN AND THIS DOCUMENT ARE SUBJECT TO SPECIFIC DISCLAIMERS, SET FORTH AT www.vishay.com/doc?91000

TRUTH TABLE				
INPUTS			OUTPUTS	
SD	TXD	OPTICAL INPUT IRRADIANCE mW/m²	RXD	TRANSMITTER
High	x	x	Tri-state floating with a weak pull-up to the supply voltage	0
Low	High	x	Low (echo on)	I_e
Low	High > 100 µs	x	High	0
Low	Low	< 2	High	0
Low	Low	> min. irradiance E_e < max. irradiance E_e	Low (active)	0
Low	Low	> max. irradiance E_e	x	0

RECOMMENDED CIRCUIT DIAGRAM

Operated at a clean low impedance power supply the TFBS4652 needs only one additional external component when the IRED drive current should be minimized for minimum current consumption according the low power IrDA standard. When combined operation in IrDA and remote control is intended no current limiting resistor is recommended. When long wires are used for bench tests, the capacitors are mandatory for testing rise/fall time correctly.

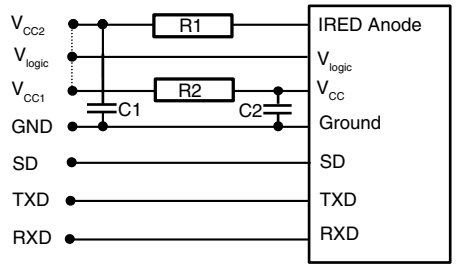

19289

Fig. 1 - Recommended Application Circuit

The capacitor C1 is buffering the supply voltage V_{CC2} and eliminates the inductance of the power supply line. This one should be a small ceramic version or other fast capacitor to guarantee the fast rise time of the IRED current. The resistor R1 is necessary for controlling the IRED drive current when the internally controlled current is too high for the application.

Vishay transceivers integrate a sensitive receiver and a built-in power driver. The combination of both needs a careful circuit board layout. The use of thin, long, resistive and inductive wiring should be avoided. The inputs (TXD, SD) and the output RXD should be directly (DC) coupled to the I/O circuit.

The capacitor C2 combined with the resistor R2 is the low pass filter for smoothing the supply voltage.

As already stated above R2, C1 and C2 are optional and depend on the quality of the supply voltages V_{CCx} and injected noise. An unstable power supply with dropping voltage during transmission may reduce the sensitivity (and transmission range) of the transceiver.

The placement of these parts is critical. It is strongly recommended to position C2 as close as possible to the transceiver power supply pins.

When extended wiring is used as in bench tests the inductance of the power supply can cause dynamically a voltage drop at V_{CC2}. Often some power supplies are not able to follow the fast current rise time. In that case another 4.7 µF (type, see table under C1) at V_{CC2} will be helpful.

Under extreme EMI conditions as placing an RF-transmitter antenna on top of the transceiver, we recommend to protect all inputs by a low-pass filter, as a minimum a 12 pF capacitor, especially at the RXD port.

RECOMMENDED APPLICATION CIRCUIT COMPONENTS	
COMPONENT	RECOMMENDED VALUE
C1, C2	0.1 µF, ceramic Vishay part# VJ 1206 Y 104 J XXMT
R1	See table below
R2	47 Ω, 0.125 W (V_{CC1} = 3 V)

I/O AND SOFTWARE

In the description, already different I/Os are mentioned. Different combinations are tested and the function verified with the special drivers available from the I/O suppliers. In special cases refer to the I/O manual, the Vishay application notes, or contact directly Vishay Sales, Marketing or Application.

For operating at RS232 ports we recommend to use an encoder / decoder-module.

Note

- TFBS4652 echoes the TXD signal at the RXD output during transmission. For communication this signal is to be correctly ignored by the controller or the software. The echo signal is implemented for test purposes in mass production

For technical questions within your region: irdasupportAM@vishay.com, irdasupportAP@vishay.com, irdasupportEU@vishay.com
THIS DOCUMENT IS SUBJECT TO CHANGE WITHOUT NOTICE. THE PRODUCTS DESCRIBED HEREIN AND THIS DOCUMENT ARE SUBJECT TO SPECIFIC DISCLAIMERS, SET FORTH AT www.vishay.com/doc?91000

ASSEMBLY INSTRUCTIONS

Reflow Soldering

- Reflow soldering must be done within 72 h while stored under a max. temperature of 30 °C, 60 % RH after opening the dry pack envelope
- Set the furnace temperatures for pre-heating and heating in accordance with the reflow temperature profile as shown in the diagram. Exercise extreme care to keep the maximum temperature below 260 °C. The temperature shown in the profile means the temperature at the device surface. Since there is a temperature difference between the component and the circuit board, it should be verified that the temperature of the device is accurately being measured
- Handling after reflow should be done only after the work surface has been cooled off

Manual Soldering

- Use a soldering iron of 25 W or less. Adjust the temperature of the soldering iron below 300 °C
- Finish soldering within 3 s
- Handle products only after the temperature has cooled off

VISHAY LEAD (Pb)-FREE REFLOW SOLDER PROFILE

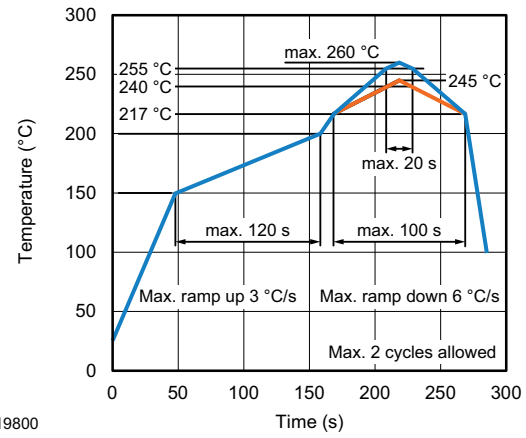

For technical questions within your region: irdasupportAM@vishay.com, irdasupportAP@vishay.com, irdasupportEU@vishay.com

THIS DOCUMENT IS SUBJECT TO CHANGE WITHOUT NOTICE. THE PRODUCTS DESCRIBED HEREIN AND THIS DOCUMENT ARE SUBJECT TO SPECIFIC DISCLAIMERS, SET FORTH AT www.vishay.com/doc?91000

PACKAGE DIMENSIONS in millimeters

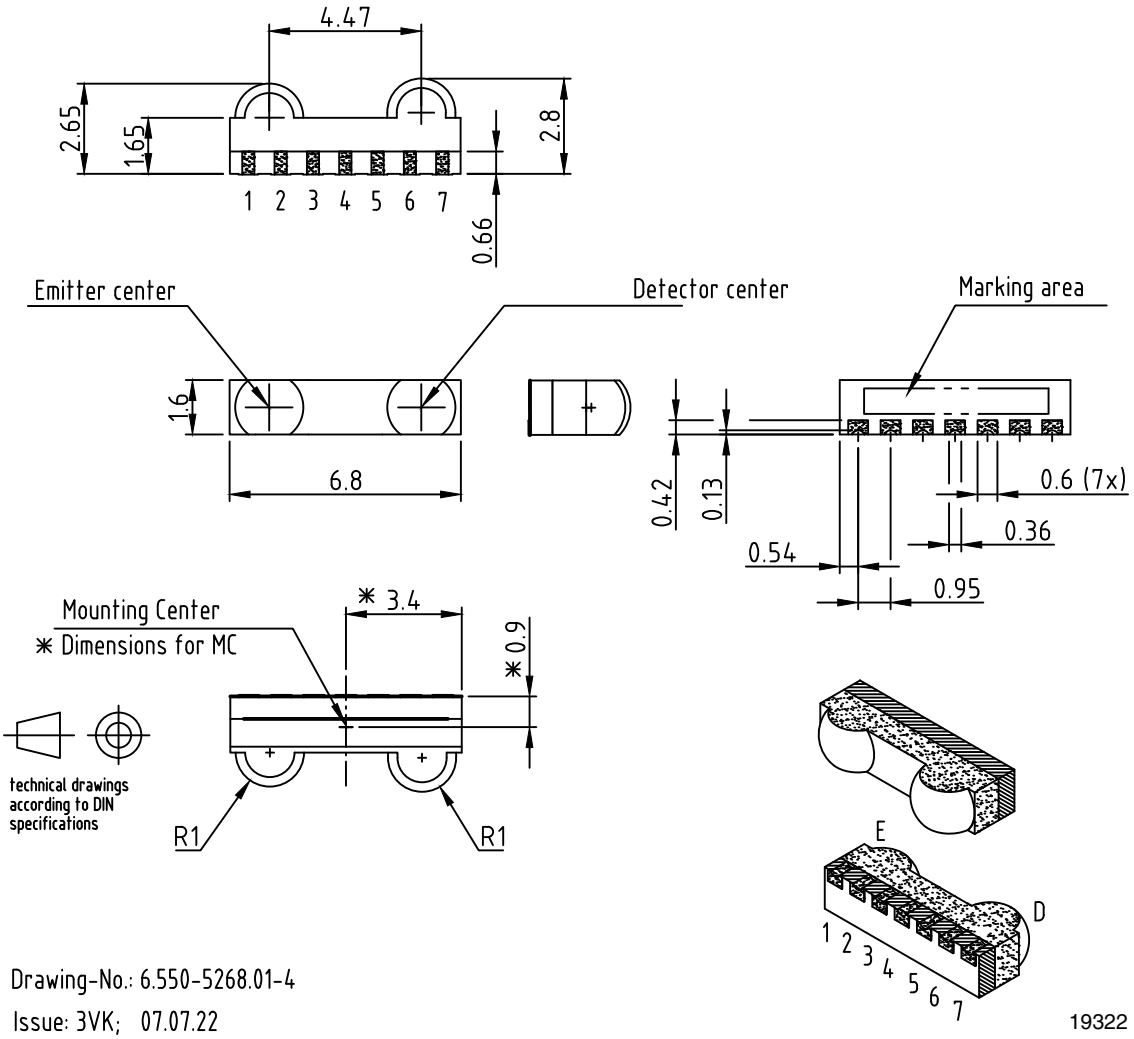

Fig. 2 - TFBS4652 Mechanical Dimensions, Tolerance ± 0.2 mm, if not Otherwise Mentioned

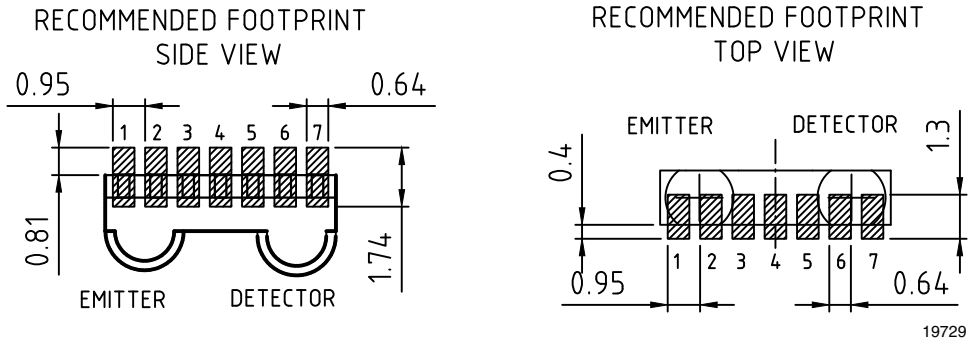

Fig. 3 - TFBS4652 Soldering Footprint, Tolerance ± 0.2 mm, if not Otherwise Mentioned

For technical questions within your region: irdasupportAM@vishay.com, irdasupportAP@vishay.com, irdasupportEU@vishay.com

THIS DOCUMENT IS SUBJECT TO CHANGE WITHOUT NOTICE. THE PRODUCTS DESCRIBED HEREIN AND THIS DOCUMENT ARE SUBJECT TO SPECIFIC DISCLAIMERS, SET FORTH AT www.vishay.com/doc?91000

TAPE DIMENSIONS FOR TR1 AND TR3 in millimeters

Tape for Side View Oriented Parts

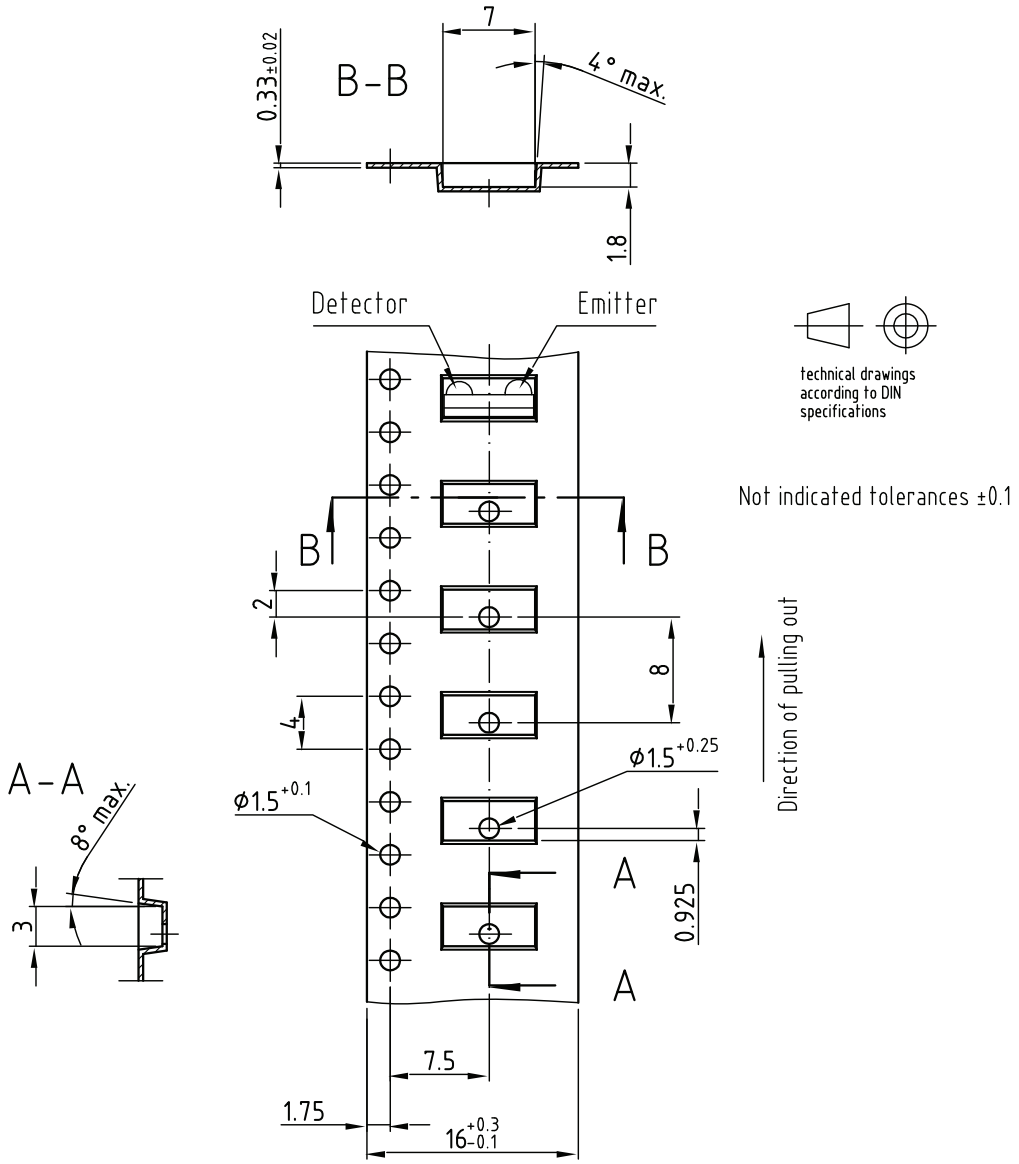

Drawing-No.: 9.700-5296.01-4

Issue: prel. copy; 24.11.04

19285

For technical questions within your region: irdasupportAM@vishay.com, irdasupportAP@vishay.com, irdasupportEU@vishay.com

THIS DOCUMENT IS SUBJECT TO CHANGE WITHOUT NOTICE. THE PRODUCTS DESCRIBED HEREIN AND THIS DOCUMENT ARE SUBJECT TO SPECIFIC DISCLAIMERS, SET FORTH AT www.vishay.com/doc?91000

TAPE DIMENSIONS FOR TT1 in millimeters

Tape for Top View Oriented Parts

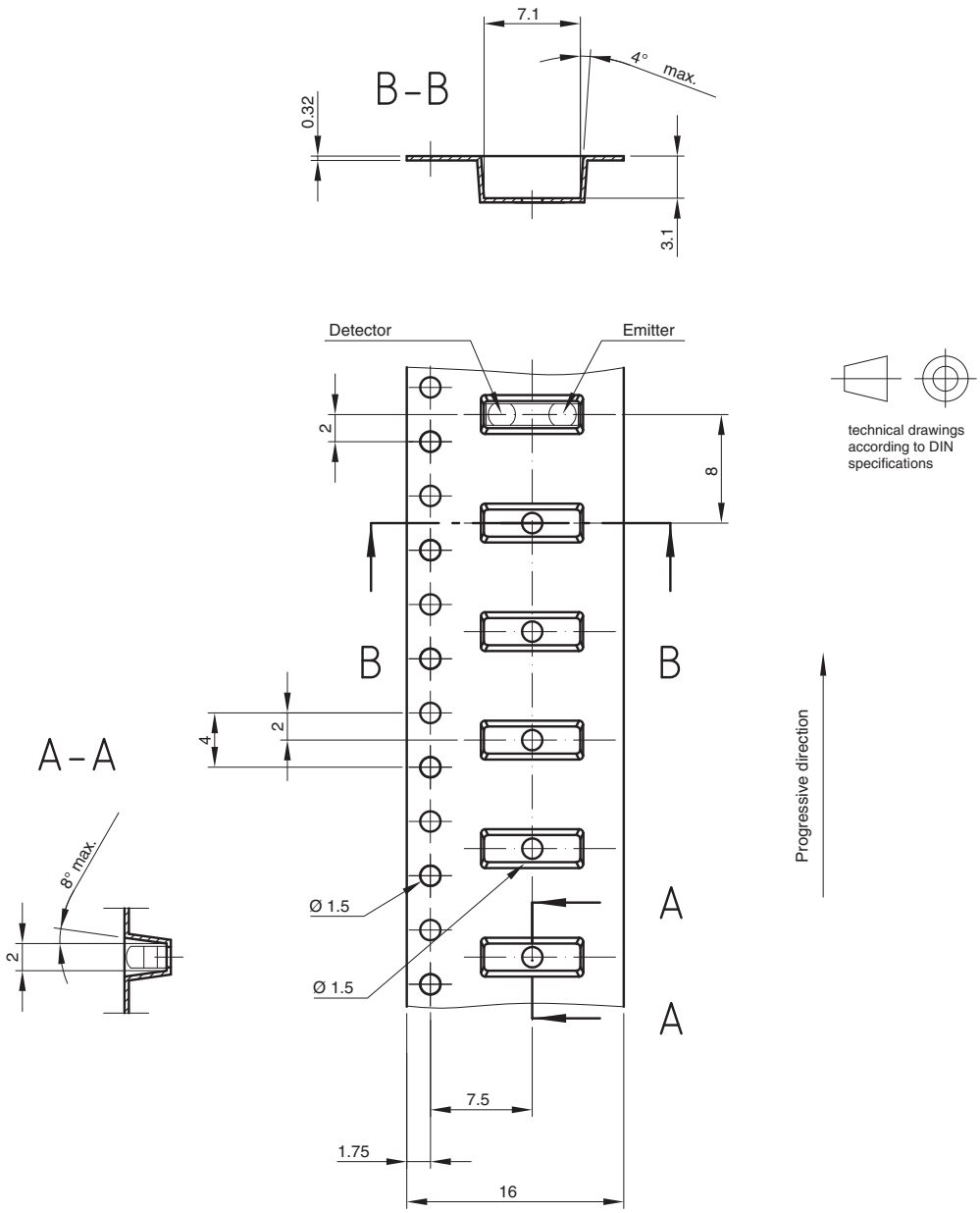

Drawing-No.: 9.700-5340.01-4
Issue: 1; 15.01.09
21663

For technical questions within your region: irdasupportAM@vishay.com, irdasupportAP@vishay.com, irdasupportEU@vishay.com
THIS DOCUMENT IS SUBJECT TO CHANGE WITHOUT NOTICE. THE PRODUCTS DESCRIBED HEREIN AND THIS DOCUMENT ARE SUBJECT TO SPECIFIC DISCLAIMERS, SET FORTH AT www.vishay.com/doc?91000

REEL DIMENSIONS in millimeters

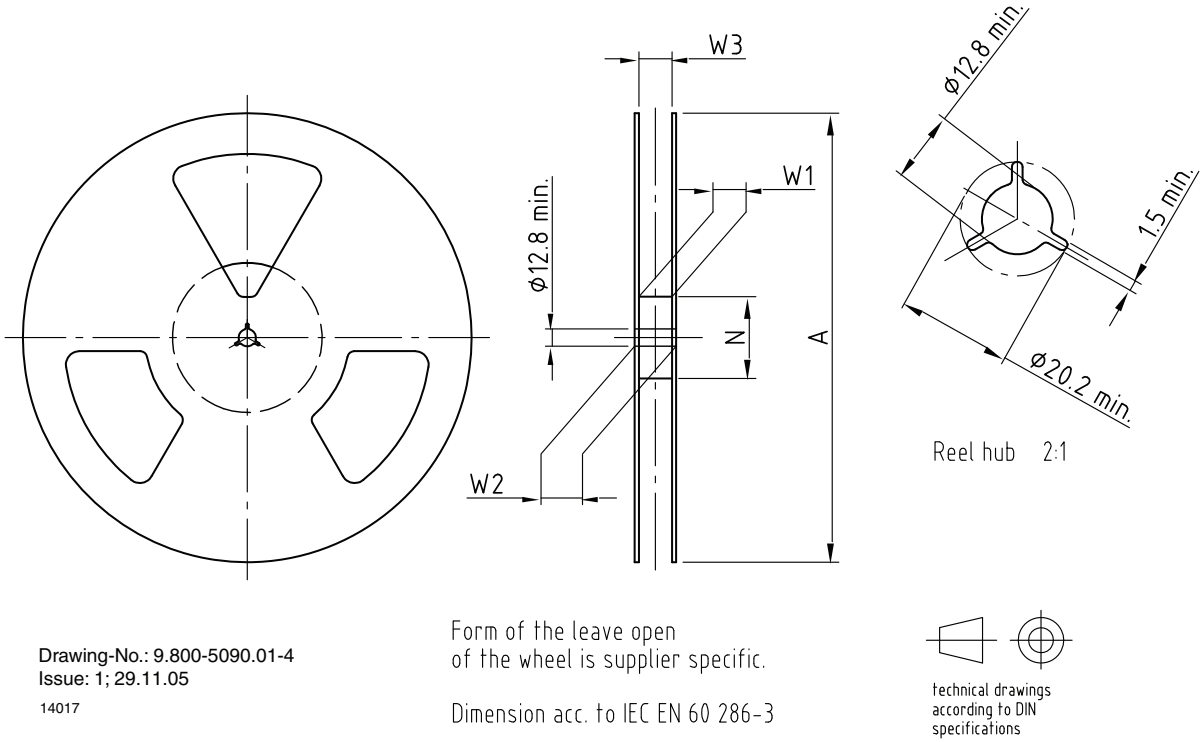

Drawing-No.: 9.800-5090.01-4
Issue: 1; 29.11.05
14017

Form of the leave open
of the wheel is supplier specific.

Dimension acc. to IEC EN 60 286-3

technical drawings
according to DIN
specifications

TAPING VARIANT	TAPE WIDTH (mm)	A MAX. (mm)	N (mm)	W_1 MIN. (mm)	W_2 MAX. (mm)	W_3 MIN. (mm)	W_3 MAX. (mm)
TT1 / TR1	16	180	60	16.4	22.4	15.9	19.4
TT3 / TR3	16	330	50	16.4	22.4	15.9	19.4

LEADER AND TRAILER DIMENSIONS in millimeters

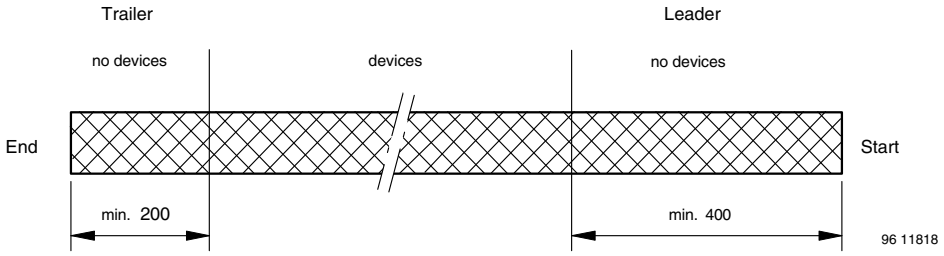

COVER TAPE PEEL STRENGTH

According to DIN EN 60286-3

0.1 N to 1.3 N

300 ± 10 mm/min.

165° to 180° peel angle

LABEL

Standard bar code labels for finished goods

The standard bar code labels are product labels and used for identification of goods. The finished goods are packed in final packing area. The standard packing units are labeled with standard bar code labels before transported as finished goods to warehouses. The labels are on each packing unit and contain Vishay Semiconductor GmbH specific data.

For technical questions within your region: irdasupportAM@vishay.com, irdasupportAP@vishay.com, irdasupportEU@vishay.com

THIS DOCUMENT IS SUBJECT TO CHANGE WITHOUT NOTICE. THE PRODUCTS DESCRIBED HEREIN AND THIS DOCUMENT ARE SUBJECT TO SPECIFIC DISCLAIMERS, SET FORTH AT www.vishay.com/doc?91000

DRY PACKING

The reel is packed in an anti-humidity bag to protect the devices from absorbing moisture during transportation and storage.

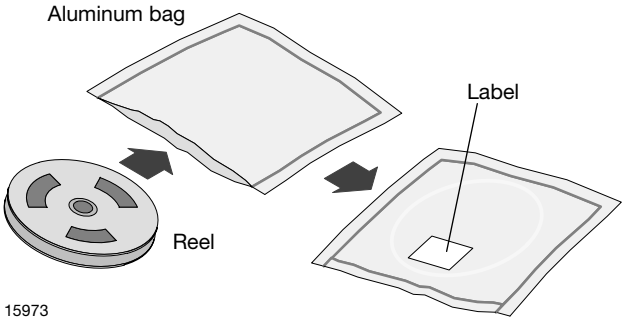

15973

FINAL PACKING

The sealed reel is packed into a cardboard box.

RECOMMENDED METHOD OF STORAGE

Dry box storage is recommended as soon as the aluminum bag has been opened to prevent moisture absorption. The following conditions should be observed, if dry boxes are not available:

- Storage temperature 10 °C to 30 °C
- Storage humidity ≤ 60 % RH max.

After more than 72 h under these conditions moisture content will be too high for reflow soldering.

In case of moisture absorption, the devices will recover to the former condition by drying under the following condition:

192 h at 40 °C + 5 °C / - 0 °C and < 5 % RH (dry air / nitrogen) or

96 h at 60 °C + 5 °C and < 5 % RH for all device containers or

24 h at 125 °C + 5 °C not suitable for reel or tubes.

An EIA JEDEC® standard J-STD-020 level 4 label is included on all dry bags.

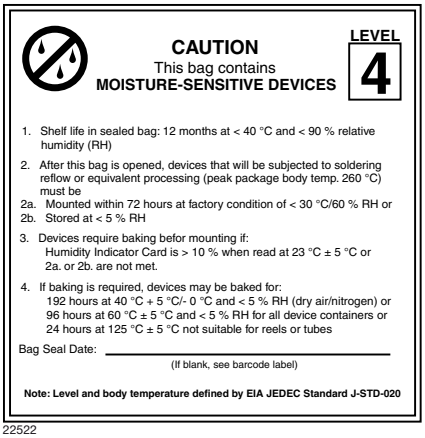

22522

EIA JEDEC standard J-STD-020 level 4 label is included on all dry bags

OUTER PACKAGING

The sealed reel is packed into a pizza box.

CARTON BOX DIMENSIONS in millimeters

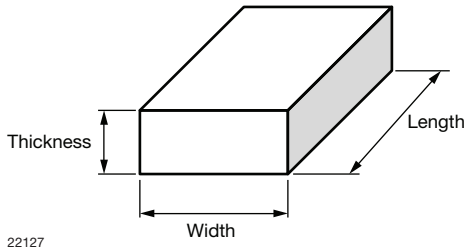

22127

ORDER CODE	BOXING	THICKNESS	WIDTH	LENGTH
TT3 / TR3	Pizza box (taping in reels)	50	340	340
TT1 / TR1	Pizza box (taping in reels)	32	190	190

For technical questions within your region: irdasupportAM@vishay.com, irdasupportAP@vishay.com, irdasupportEU@vishay.com

THIS DOCUMENT IS SUBJECT TO CHANGE WITHOUT NOTICE. THE PRODUCTS DESCRIBED HEREIN AND THIS DOCUMENT ARE SUBJECT TO SPECIFIC DISCLAIMERS, SET FORTH AT www.vishay.com/doc?91000

VISHAY SEMICONDUCTOR GmbH STANDARD BAR CODE PRODUCT LABEL (finished goods)		
PLAIN WRITING	**ABBREVIATION**	**LENGTH**
Item-description	-	18
Item-number	INO	8
Selection-code	SEL	3
LOT-/serial-number	BATCH	10
Data-code	COD	3 (YWW)
Plant-code	PTC	2
Quantity	QTY	8
Accepted by	ACC	-
Packed by	PCK	-
Mixed code indicator	MIXED CODE	-
Origin	xxxxxxx+	Company logo
Long bar code top	**Type**	**Length**
Item-number	N	8
Plant-code	N	2
Sequence-number	X	3
Quantity	N	8
Total length	-	21
Short bar code bottom	**Type**	**Length**
Selection-code	X	3
Data-code	N	3
Batch-number	X	10
Filter	-	1
Total length	-	17

ESD PRECAUTION

Proper storage and handling procedures should be followed to prevent ESD damage to the devices especially when they are removed from the antistatic shielding bag. Electrostatic sensitive devices warning labels are on the packaging.

VISHAY SEMICONDUCTORS STANDARD BAR CODE LABELS

The Vishay Semiconductors standard bar code labels are printed at final packing areas. The labels are on each packing unit and contain Vishay Semiconductors specific data.



For technical questions within your region: irdasupportAM@vishay.com, irdasupportAP@vishay.com, irdasupportEU@vishay.com

THIS DOCUMENT IS SUBJECT TO CHANGE WITHOUT NOTICE. THE PRODUCTS DESCRIBED HEREIN AND THIS DOCUMENT ARE SUBJECT TO SPECIFIC DISCLAIMERS, SET FORTH AT www.vishay.com/doc?91000

Disclaimer

ALL PRODUCT, PRODUCT SPECIFICATIONS AND DATA ARE SUBJECT TO CHANGE WITHOUT NOTICE TO IMPROVE RELIABILITY, FUNCTION OR DESIGN OR OTHERWISE.

Vishay Intertechnology, Inc., its affiliates, agents, and employees, and all persons acting on its or their behalf (collectively, “Vishay”), disclaim any and all liability for any errors, inaccuracies or incompleteness contained in any datasheet or in any other disclosure relating to any product.

Vishay makes no warranty, representation or guarantee regarding the suitability of the products for any particular purpose or the continuing production of any product. To the maximum extent permitted by applicable law, Vishay disclaims (i) any and all liability arising out of the application or use of any product, (ii) any and all liability, including without limitation special, consequential or incidental damages, and (iii) any and all implied warranties, including warranties of fitness for particular purpose, non-infringement and merchantability.

Statements regarding the suitability of products for certain types of applications are based on Vishay's knowledge of typical requirements that are often placed on Vishay products in generic applications. Such statements are not binding statements about the suitability of products for a particular application. It is the customer's responsibility to validate that a particular product with the properties described in the product specification is suitable for use in a particular application. Parameters provided in datasheets and / or specifications may vary in different applications and performance may vary over time. All operating parameters, including typical parameters, must be validated for each customer application by the customer's technical experts. Product specifications do not expand or otherwise modify Vishay's terms and conditions of purchase, including but not limited to the warranty expressed therein.

Hyperlinks included in this datasheet may direct users to third-party websites. These links are provided as a convenience and for informational purposes only. Inclusion of these hyperlinks does not constitute an endorsement or an approval by Vishay of any of the products, services or opinions of the corporation, organization or individual associated with the third-party website. Vishay disclaims any and all liability and bears no responsibility for the accuracy, legality or content of the third-party website or for that of subsequent links.

Vishay products are not designed for use in life-saving or life-sustaining applications or any application in which the failure of the Vishay product could result in personal injury or death unless specifically qualified in writing by Vishay. Customers using or selling Vishay products not expressly indicated for use in such applications do so at their own risk. Please contact authorized Vishay personnel to obtain written terms and conditions regarding products designed for such applications.

No license, express or implied, by estoppel or otherwise, to any intellectual property rights is granted by this document or by any conduct of Vishay. Product names and markings noted herein may be trademarks of their respective owners.

© 2025 VISHAY INTERTECHNOLOGY, INC. ALL RIGHTS RESERVED

THIS DOCUMENT IS SUBJECT TO CHANGE WITHOUT NOTICE. THE PRODUCTS DESCRIBED HEREIN AND THIS DOCUMENT ARE SUBJECT TO SPECIFIC DISCLAIMERS, SET FORTH AT www.vishay.com/doc?91000