Solid Tantalum Chip Capacitors TANTAMOUNT™, Low Profile, Low ESR, Conformal Coated, Maximum CV

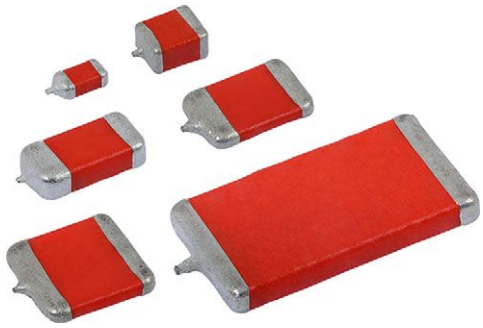

FEATURES

- New robust ratings for pulsed applications
- New case size offerings
- 1.2 mm to 2 mm height
- Terminations: 100 % matte tin (2) standard, tin / lead available
- Very low ESR
- 8 mm, 12 mm tape and reel packaging available per EIA-481 and reeling per IEC 60286-3
  7" [178 mm] standard
  13" [330 mm] available
- Footprint compatible with EIA 535BAAC and CECC 30801
- See also 592W for additional ratings designs for pulsed applications
- Material categorization: for definitions of compliance please see www.vishay.com/doc?99912

Pb-free Available

RoHS* Available

HALOGEN FREE GREEN (5-2008) Available

Note

* This datasheet provides information about parts that are RoHS-compliant and / or parts that are non RoHS-compliant. For example, parts with lead (Pb) terminations are not RoHS-compliant. Please see the information / tables in this datasheet for details

LINKS TO ADDITIONAL RESOURCES

3D Models | Parametric Search | Calculators

PERFORMANCE CHARACTERISTICS

www.vishay.com/doc?40194

Operating Temperature: -55 °C to +125 °C
(above 85 °C, voltage derating is required)

Capacitance Range: 1 µF to 1000 µF

Capacitance Tolerance: ± 10 %, ± 20 % standard

Voltage Rating: 4 V_{DC} to 50 V_{DC}

Moisture Sensitivity Level 2a

ORDERING INFORMATION

591D	106	X0	010	B	2	T	15H
TYPE	CAPACITANCE	CAPACITANCE TOLERANCE	DC VOLTAGE RATING AT +85 °C	CASE CODE	TERMINATION	REEL SIZE AND PACKAGING	SUFFIX
	This is expressed in picofarads. The first two digits are the significant figures. The third is the number of zeros to follow.	**X0 = ± 20 %** X9 = ± 10 %	This is expressed in volts. To complete the three-digit block, zeros precede the voltage rating. A decimal point is indicated by an "R" (6R3 = 6.3 V).	See Ratings and Case Codes table	**2 = 100 % tin** 4 = gold plated 8 = solder plated 60/40 Special order	**T = tape and reel 7" [178 mm] reel** W = 13" [330 mm] reel	Maximum height (mm) see Standard Ratings table

Notes

- Preferred tolerance and reel sizes are in bold.
  We reserve the right to supply higher voltage ratings and tighter capacitance tolerance capacitors in the same case size
- Low ESR solid tantalum chip capacitors allow delta ESR of 1.25 times the datasheet limits after mounting

For technical questions, contact: tantalum@vishay.com

THIS DOCUMENT IS SUBJECT TO CHANGE WITHOUT NOTICE. THE PRODUCTS DESCRIBED HEREIN AND THIS DOCUMENT ARE SUBJECT TO SPECIFIC DISCLAIMERS, SET FORTH AT www.vishay.com/doc?91000

DIMENSIONS in inches [millimeters]

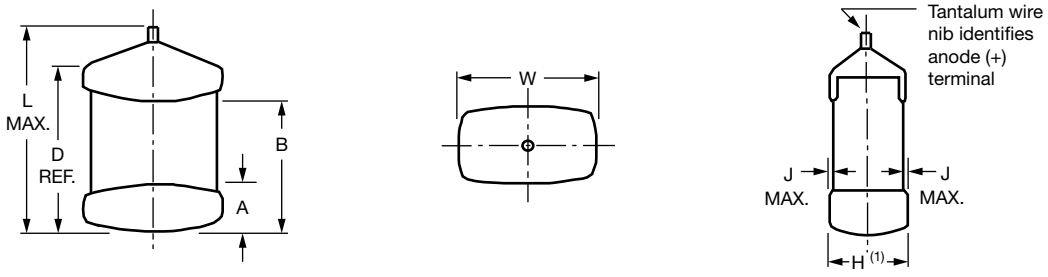

CASE CODE	L MAX.	W	A	B	D REF.	J MAX.
A	0.146 [3.7]	0.071 ± 0.012 [1.8 ± 0.3]	0.031 ± 0.012 [0.8 ± 0.3]	0.087 ± 0.016 [2.2 ± 0.4]	0.114 [2.9]	0.004 [0.1]
B	0.157 [4.0]	0.110 + 0.012 / - 0.024 [2.8 + 0.3 / - 0.6]	0.031 ± 0.012 [0.8 ± 0.3]	0.098 ± 0.016 [2.5 ± 0.4]	0.138 [3.5]	0.004 [0.1]
C	0.28 [7.1]	0.126 ± 0.012 [3.2 ± 0.3]	0.051 ± 0.012 [1.3 ± 0.3]	0.173 ± 0.024 [4.4 ± 0.6]	0.236 [6.0]	0.004 [0.1]
D	0.295 [7.5]	0.169 ± 0.012 [4.3 ± 0.3]	0.051 ± 0.012 [1.3 ± 0.3]	0.181 ± 0.024 [4.6 ± 0.6]	0.252 [6.4]	0.004 [0.1]
M	0.295 [7.5]	0.248 ± 0.012 [6.3 ± 0.3]	0.051 ± 0.012 [1.3 ± 0.3]	0.200 ± 0.024 [5.1 ± 0.6]	0.264 [6.7]	0.004 [0.1]
R	0.283 [7.2]	0.236 + 0.012 / - 0.024 [6.0 + 0.3 / - 0.6]	0.051 ± 0.012 [1.3 ± 0.3]	0.181 ± 0.024 [4.6 ± 0.6]	0.244 [6.2]	0.004 [0.1]

Notes

- The anode termination (D less B) will be a minimum of 0.012" [0.3 mm]

(1) For package height, please refer to specific rating in the “Standard Ratings” table

RATINGS AND CASE CODES

µF	4 V	6.3 V	10 V	16 V	20 V	25 V	35 V	50 V
1.0							A / B	B
1.5							B	
2.2					A	A / B	B / C	
3.3						B / C	B / C / D	
4.7			A	A	A / B	C	B	C
6.8			A	A / B	B / C	C / D	D / R	
10		A	A / B	B / C	B / D	B / D / R	R	
15		A / B	B	B / D	C	R		
22	A / B	A / B	A / B / C	C / D	D / R			
33	B	A / B / C	C / D	C / D / R	R	C		
47	B / C	B / C / D	D / R	C / R		D		
68	B / C / D	D / R	C / D / R	C / D		R		
100	D / R	B / C / D / R	B / C / D	C / D	R			
120		C						
150	C / R	C / D / R	C / D	D / R				
220	C / D	C / D / R	D / R	R				
330	C / D	C / D / R	D / R					
470	C / D / R	C / D / R						
680	D / R	R						
1000	R	R						
1500		M / R						

For technical questions, contact: tantalum@vishay.com

THIS DOCUMENT IS SUBJECT TO CHANGE WITHOUT NOTICE. THE PRODUCTS DESCRIBED HEREIN AND THIS DOCUMENT ARE SUBJECT TO SPECIFIC DISCLAIMERS, SET FORTH AT www.vishay.com/doc?91000

STANDARD RATINGS

CAPACITANCE (µF)	CASE CODE	PART NUMBER	HEIGHT MAX. (mm)	MAX. DCL AT +25 °C (µA)	MAX. DF AT +25 °C 120 Hz (%)	MAX. ESR AT +25 °C 100 kHz (Ω)	MAX. RIPPLE 100 kHz I_{RMS} (A)
4 V_{DC} AT +85 °C; 2.7 V_{DC} AT +125 °C							
22	A	591D226(1)004A(2)(3)15H	1.5	0.9	6	1.200	0.22
22	B	591D226(1)004B(2)(3)15H	1.5	0.9	6	0.800	0.32
33	B	591D336(1)004B(2)(3)15H	1.5	1.3	6	0.800	0.32
47	B	591D476(1)004B(2)(3)15H	1.5	1.9	6	0.800	0.32
47	C	591D476(1)004C(2)(3)15H	1.5	1.9	6	0.200	0.71
68	B	591D686(1)004B(2)(3)15H	1.5	2.7	6	0.800	0.32
68	C	591D686(1)004C(2)(3)15H	1.5	2.7	6	0.180	0.75
68	D	591D686(1)004D(2)(3)15H	1.5	2.7	6	0.140	0.94
100	D	591D107(1)004D(2)(3)15H	1.5	4.0	8	0.130	0.98
100	R	591D107(1)004R(2)(3)15H	1.5	4.0	8	0.110	1.17
150	C	591D157(1)004C(2)(3)15H	1.5	6.0	8	0.150	0.82
150	R	591D157(1)004R(2)(3)15H	1.5	6.0	8	0.100	1.22
220	C	591D227(1)004C(2)(3)20H	2.0	8.8	8	0.075	1.21
220	D	591D227(1)004D(2)(3)15H	1.5	8.8	8	0.100	1.12
330	C	591D337(1)004C(2)(3)20H	2.0	13.2	8	0.070	1.25
330	D	591D337(1)004D(2)(3)20H	2.0	13.2	8	0.060	1.53
470	C	591D477(1)004C(2)(3)20H	2.0	18.8	8	0.070	1.25
470	D	591D477(1)004D(2)(3)20H	2.0	18.8	8	0.060	1.53
470	R	591D477(1)004R(2)(3)20H	2.0	18.8	10	0.045	1.97
680	D	591D687(1)004D(2)(3)20H	2.0	27.2	12	0.085	1.28
680	R	591D687(1)004R(2)(3)20H	2.0	27.2	12	0.045	1.97
1000	R	591D108(1)004R(2)(3)20H	2.0	40.0	14	0.050	1.87
6.3 V_{DC} AT +85 °C; 4 V_{DC} AT +125 °C							
10	A	591D106(1)6R3A(2)(3)15H	1.5	0.6	6	1.900	0.18
15	A	591D156(1)6R3A(2)(3)15H	1.5	0.9	6	1.300	0.21
15	B	591D156(1)6R3B(2)(3)15H	1.5	0.9	6	0.800	0.32
22	A	591D226(1)6R3A(2)(3)13H	1.3	1.4	6	0.800	0.26
22	B	591D226(1)6R3B(2)(3)15H	1.5	1.4	6	0.800	0.32
33	A	591D336(1)6R3A(2)(3)15H	1.5	2.1	6	1.000	0.24
33	B	591D336(1)6R3B(2)(3)15H	1.5	2.1	6	0.800	0.32
33	C	591D336(1)6R3C(2)(3)15H	1.5	2.1	6	0.200	0.71
47	B	591D476(1)6R3B(2)(3)15H	1.5	3.0	8	0.800	0.32
47	C	591D476(1)6R3C(2)(3)15H	1.5	3.0	6	0.200	0.71
47	D	591D476(1)6R3D(2)(3)15H	1.5	3.0	6	0.140	0.94
68	D	591D686(1)6R3D(2)(3)15H	1.5	4.3	6	0.130	0.98
68	R	591D686(1)6R3R(2)(3)15H	1.5	4.3	6	0.110	1.17
100	B	591D107(1)6R3B(2)(3)15H	1.5	6.3	8	0.500	0.40
100	C	591D107(1)6R3C(2)(3)15H	1.5	6.3	8	0.190	0.73
100	D	591D107(1)6R3D(2)(3)15H	1.5	6.3	8	0.150	0.91
100	R	591D107(1)6R3R(2)(3)15H	1.5	6.3	8	0.100	1.22
120	C	591D127(1)6R3C(2)(3)20H	2.0	7.2	8	0.100	1.05
150	C	591D157(1)6R3C(2)(3)20H	2.0	9.5	8	0.080	1.17
150	D	591D157(1)6R3D(2)(3)15H	1.5	9.5	8	0.120	1.02
150	R	591D157(1)6R3R(2)(3)15H	1.5	9.5	8	0.140	1.04
220	C	591D227(1)6R3C(2)(3)20H	2.0	13.9	8	0.075	1.21
220	D	591D227(1)6R3D(2)(3)20H	2.0	13.9	8	0.065	1.47
220	R	591D227(1)6R3R(2)(3)15H	1.5	13.9	8	0.150	1.00

Note

- Part number definitions:
  (1) Tolerance: for 10 % tolerance, specify “X9”; for 20 % tolerance, change to “X0”
  (2) Termination: for 100 % tin specify “2”, for gold plated specify “4”, for solder plated 60/40 specify “8”
  (3) Packaging code: for 7" reels specify “T”, for 13" reels specify “W”

For technical questions, contact: tantalum@vishay.com

THIS DOCUMENT IS SUBJECT TO CHANGE WITHOUT NOTICE. THE PRODUCTS DESCRIBED HEREIN AND THIS DOCUMENT ARE SUBJECT TO SPECIFIC DISCLAIMERS, SET FORTH AT www.vishay.com/doc?91000

STANDARD RATINGS

CAPACITANCE (µF)	CASE CODE	PART NUMBER	HEIGHT MAX. (mm)	MAX. DCL AT +25 °C (µA)	MAX. DF AT +25 °C 120 Hz (%)	MAX. ESR AT +25 °C 100 kHz (Ω)	MAX. RIPPLE 100 kHz I_{RMS} (A)
6.3 V_{DC} AT +85 °C; 4 V_{DC} AT +125 °C							
330	C	591D337(1)6R3C(2)(3)20H	2.0	20.8	12	0.150	0.86
330	D	591D337(1)6R3D(2)(3)20H	2.0	20.8	8	0.060	1.53
330	R	591D337(1)6R3R(2)(3)20H	2.0	20.8	8	0.045	1.97
470	C	591D477X06R3C(2)(3)16H	1.6	29.6	16	0.080	1.12
470	C	591D477(1)6R3C(2)(3)20H	2.0	29.6	14	0.080	1.17
470	D	591D477(1)6R3D(2)(3)20H	2.0	29.6	10	0.085	1.28
470	R	591D477(1)6R3R(2)(3)20H	2.0	29.6	10	0.045	1.97
680	R	591D687(1)6R3R(2)(3)16H	1.6	42.8	10	0.060	1.60
680	R	591D687(1)6R3R(2)(3)20H	2.0	42.8	10	0.060	1.71
1000	R	591D108(1)6R3R(2)(3)20H	2.0	63.0	29	0.075	1.53
1500	M	591D158X06R3M(2)(3)20H	2.0	95.0	50	0.060	1.87
1500	R	591D158X06R3R(2)(3)20H	2.0	95.0	50	0.060	1.71
10 V_{DC} AT +85 °C; 7 V_{DC} AT +125 °C							
4.7	A	591D475(1)010A(2)(3)15H	1.5	0.5	6	4.000	0.12
6.8	A	591D685(1)010A(2)(3)15H	1.5	0.7	6	4.000	0.12
10	A	591D106(1)010A(2)(3)15H	1.5	1.0	6	1.300	0.21
10	B	591D106(1)010B(2)(3)15H	1.5	1.0	6	0.850	0.31
15	B	591D156(1)010B(2)(3)15H	1.5	1.5	6	0.800	0.32
22	A	591D226(1)010A(2)(3)13H	1.3	2.2	6	0.800	0.27
22	A	591D226(1)010A(2)(3)15H	1.5	2.2	6	0.900	0.26
22	B	591D226(1)010B(2)(3)15H	1.5	2.2	6	0.800	0.32
22	C	591D226(1)010C(2)(3)15H	1.5	2.2	6	0.200	0.71
33	C	591D336(1)010C(2)(3)15H	1.5	3.3	6	0.200	0.71
33	D	591D336(1)010D(2)(3)15H	1.5	3.3	6	0.140	0.94
47	D	591D476(1)010D(2)(3)15H	1.5	4.7	6	0.140	0.94
47	R	591D476(1)010R(2)(3)15H	1.5	4.7	6	0.120	1.12
68	C	591D686(1)010C(2)(3)15H	1.5	6.8	6	0.190	0.73
68	D	591D686(1)010D(2)(3)15H	1.5	6.8	6	0.130	0.98
68	R	591D686(1)010R(2)(3)15H	1.5	6.8	6	0.110	1.17
100	B	591D107(1)010B(2)(3)20H	2.0	10.0	14	0.250	0.57
100	C	591D107(1)010C(2)(3)20H	2.0	10.0	8	0.085	1.14
100	D	591D107(1)010D(2)(3)15H	1.5	10.0	8	0.130	0.98
150	C	591D157(1)010C(2)(3)15H	1.5	15.0	8	0.083	1.10
150	C	591D157(1)010C(2)(3)20H	2.0	15.0	8	0.080	1.17
150	D	591D157(1)010D(2)(3)15H	1.5	15.0	8	0.120	1.02
150	D	591D157(1)010D(2)(3)20H	2.0	15.0	8	0.075	1.37
220	D	591D227(1)010D(2)(3)20H	2.0	22.0	8	0.065	1.47
220	R	591D227(1)010R(2)(3)20H	2.0	22.0	8	0.055	1.78
330	D	591D337(1)010D(2)(3)20H	2.0	33.0	8	0.060	1.53
330	R	591D337(1)010R(2)(3)18H	1.8	33.0	8	0.050	1.81
330	R	591D337(1)010R(2)(3)20H	2.0	33.0	8	0.050	1.87

Note

- Part number definitions:
  (1) Tolerance: for 10 % tolerance, specify “X9”; for 20 % tolerance, change to “X0”
  (2) Termination: for 100 % tin specify “2”, for gold plated specify “4”, for solder plated 60/40 specify “8”
  (3) Packaging code: for 7" reels specify “T”, for 13" reels specify “W”

For technical questions, contact: tantalum@vishay.com

THIS DOCUMENT IS SUBJECT TO CHANGE WITHOUT NOTICE. THE PRODUCTS DESCRIBED HEREIN AND THIS DOCUMENT ARE SUBJECT TO SPECIFIC DISCLAIMERS, SET FORTH AT www.vishay.com/doc?91000

STANDARD RATINGS

CAPACITANCE (µF)	CASE CODE	PART NUMBER	HEIGHT MAX. (mm)	MAX. DCL AT +25 °C (µA)	MAX. DF AT +25 °C 120 Hz (%)	MAX. ESR AT +25 °C 100 kHz (Ω)	MAX. RIPPLE 100 kHz I_{RMS} (A)
16 V_{DC} AT +85 °C; 10 V_{DC} AT +125 °C							
4.7	A	591D475(1)016A(2)(3)15H	1.5	0.8	6	1.750	0.19
6.8	A	591D685(1)016A(2)(3)15H	1.5	1.1	6	1.750	0.19
6.8	B	591D685(1)016B(2)(3)15H	1.5	1.1	6	0.900	0.30
10	B	591D106(1)016B(2)(3)15H	1.5	1.6	6	0.800	0.32
10	C	591D106(1)016C(2)(3)15H	1.5	1.6	6	0.500	0.45
15	B	591D156(1)016B(2)(3)15H	1.5	2.4	6	0.700	0.34
15	D	591D156(1)016D(2)(3)15H	1.5	2.4	6	0.250	0.71
22	C	591D226(1)016C(2)(3)15H	1.5	3.5	6	0.240	0.65
22	D	591D226(1)016D(2)(3)15H	1.5	3.5	6	0.180	0.83
33	C	591D336(1)016C(2)(3)15H	1.5	5.3	6	0.180	0.75
33	D	591D336(1)016D(2)(3)15H	1.5	5.3	6	0.170	0.86
33	R	591D336(1)016R(2)(3)15H	1.5	5.3	6	0.140	1.04
47	C	591D476(1)016C(2)(3)20H	2.0	7.5	6	0.180	0.78
47	R	591D476(1)016R(2)(3)15H	1.5	7.5	6	0.130	1.07
68	C	591D686(1)016C(2)(3)20H	2.0	10.9	6	0.100	1.05
68	D	591D686(1)016D(2)(3)20H	2.0	10.9	6	0.080	1.32
100	C	591D107(1)016C(2)(3)20H	2.0	16.0	8	0.100	1.05
100	D	591D107(1)016D(2)(3)15H	1.5	16.0	8	0.100	1.12
100	D	591D107(1)016D(2)(3)20H	2.0	16.0	8	0.075	1.37
150	D	591D157(1)016D(2)(3)20H	2.0	24.0	8	0.080	1.32
150	R	591D157(1)016R(2)(3)20H	2.0	24.0	8	0.060	1.71
220	R	591D227(1)016R(2)(3)20H	2.0	35.2	10	0.075	1.53
20 V_{DC} AT +85 °C; 13 V_{DC} AT +125 °C							
2.2	A	591D225(1)020A(2)(3)15H	1.5	0.5	6	4.000	0.12
4.7	A	591D475(1)020A(2)(3)15H	1.5	0.9	6	1.900	0.18
4.7	B	591D475(1)020B(2)(3)15H	1.5	0.9	6	1.600	0.22
6.8	B	591D685(1)020B(2)(3)15H	1.5	1.4	6	1.600	0.22
6.8	C	591D685(1)020C(2)(3)15H	1.5	1.4	6	0.400	0.50
10	B	591D106(1)020B(2)(3)15H	1.5	2.0	6	1.500	0.23
10	D	591D106(1)020D(2)(3)15H	1.5	2.0	6	0.270	0.68
15	C	591D156(1)020C(2)(3)15H	1.5	3.0	6	0.300	0.58
22	D	591D226(1)020D(2)(3)15H	1.5	4.4	6	0.200	0.79
22	R	591D226(1)020R(2)(3)15H	1.5	4.4	6	0.140	1.04
33	R	591D336(1)020R(2)(3)15H	1.5	6.6	6	0.140	1.04
100	R	591D107(1)020R(2)(3)20H	2.0	20.0	10	0.100	0.94

Note

- Part number definitions:
  (1) Tolerance: for 10 % tolerance, specify “X9”; for 20 % tolerance, change to “X0”
  (2) Termination: for 100 % tin specify “2”, for gold plated specify “4”, for solder plated 60/40 specify “8”
  (3) Packaging code: for 7" reels specify “T”, for 13" reels specify “W”

For technical questions, contact: tantalum@vishay.com

THIS DOCUMENT IS SUBJECT TO CHANGE WITHOUT NOTICE. THE PRODUCTS DESCRIBED HEREIN AND THIS DOCUMENT ARE SUBJECT TO SPECIFIC DISCLAIMERS, SET FORTH AT www.vishay.com/doc?91000

STANDARD RATINGS

CAPACITANCE (µF)	CASE CODE	PART NUMBER	HEIGHT MAX. (mm)	MAX. DCL AT +25 °C (µA)	MAX. DF AT +25 °C 120 Hz (%)	MAX. ESR AT +25 °C 100 kHz (Ω)	MAX. RIPPLE 100 kHz I_{RMS} (A)
25 V_{DC} AT +85 °C; 17 V_{DC} AT +125 °C							
2.2	A	591D225(1)025A(2)(3)15H	1.5	0.6	6	5.000	0.11
2.2	B	591D225(1)025B(2)(3)15H	1.5	0.6	6	3.800	0.15
3.3	B	591D335(1)025B(2)(3)15H	1.5	0.8	6	3.700	0.15
3.3	C	591D335(1)025C(2)(3)15H	1.5	0.8	6	1.000	0.32
4.7	C	591D475(1)025C(2)(3)15H	1.5	1.2	6	0.800	0.35
6.8	C	591D685(1)025C(2)(3)15H	1.5	1.7	6	0.750	0.37
6.8	D	591D685(1)025D(2)(3)15H	1.5	1.7	6	0.650	0.44
10	B	591D106X0025B(2)(3)15H	1.5	2.5	6	1.000	0.28
10	D	591D106(1)025D(2)(3)15H	1.5	2.5	6	0.600	0.46
10	R	591D106(1)025R(2)(3)15H	1.5	2.5	6	0.240	0.79
15	R	591D156(1)025R(2)(3)15H	1.5	3.8	6	0.200	0.87
33	C	591D336(1)025C(2)(3)16H	1.6	8.3	6	0.250	0.63
33	C	591D336(1)025C(2)(3)20H	2.0	8.3	6	0.250	0.66
47	D	591D476(1)025D(2)(3)20H	2.0	11.8	8	0.150	0.97
68	R	591D686(1)025R(2)(3)20H	2.0	17.0	8	0.175	1.00
35 V_{DC} AT +85 °C; 23 V_{DC} AT +125 °C							
1.0	A	591D105(1)035A(2)(3)15H	1.5	0.5	4	5.000	0.11
1.0	B	591D105(1)035B(2)(3)15H	1.5	0.5	4	4.400	0.13
1.5	B	591D155(1)035B(2)(3)15H	1.5	0.5	4	3.800	0.15
2.2	B	591D225(1)035B(2)(3)15H	1.5	0.8	6	4.000	0.14
2.2	C	591D225(1)035C(2)(3)15H	1.5	0.8	6	2.000	0.22
3.3	B	591D335(1)035B(2)(3)15H	1.5	1.2	6	3.500	0.15
3.3	C	591D335(1)035C(2)(3)15H	1.5	1.2	6	1.900	0.23
3.3	D	591D335(1)035D(2)(3)15H	1.5	1.2	6	1.500	0.29
4.7	B	591D475(1)035B(2)(3)15H	1.5	1.6	6	0.800	0.32
6.8	D	591D685(1)035D(2)(3)15H	1.5	2.4	6	0.950	0.36
6.8	R	591D685(1)035R(2)(3)15H	1.5	2.4	6	0.750	0.45
10	R	591D106(1)035R(2)(3)15H	1.5	3.5	6	0.600	0.50
50 V_{DC} AT +85 °C; 33 V_{DC} AT +125 °C							
1.0	B	591D155(1)050B(2)(3)15H	1.5	0.8	6	6.500	0.11
4.7	C	591D475(1)050C(2)(3)20H	2.0	23.5	6	6.000	0.14

Note

- Part number definitions:
  (1) Tolerance: for 10 % tolerance, specify “X9”; for 20 % tolerance, change to “X0”
  (2) Termination: for 100 % tin specify “2”, for gold plated specify “4”, for solder plated 60/40 specify “8”
  (3) Packaging code: for 7" reels specify “T”, for 13" reels specify “W”

For technical questions, contact: tantalum@vishay.com

THIS DOCUMENT IS SUBJECT TO CHANGE WITHOUT NOTICE. THE PRODUCTS DESCRIBED HEREIN AND THIS DOCUMENT ARE SUBJECT TO SPECIFIC DISCLAIMERS, SET FORTH AT www.vishay.com/doc?91000

TYPICAL CURVES AT +25 °C, IMPEDANCE AND ESR VS. FREQUENCY

591D 150 - 10 V E/20H CASE

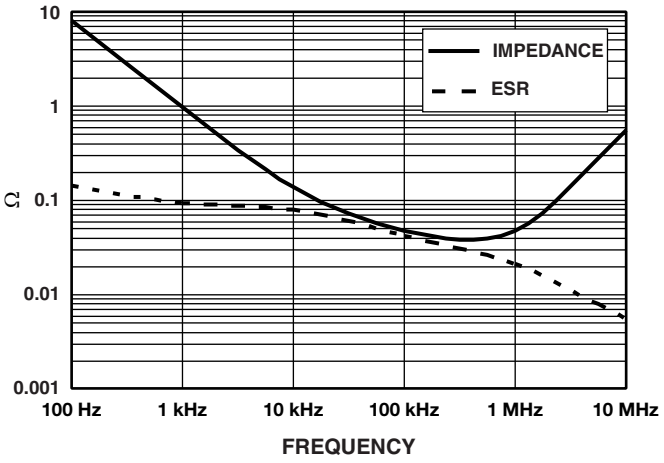

591D 330 - 6.3 V D/20H CASE

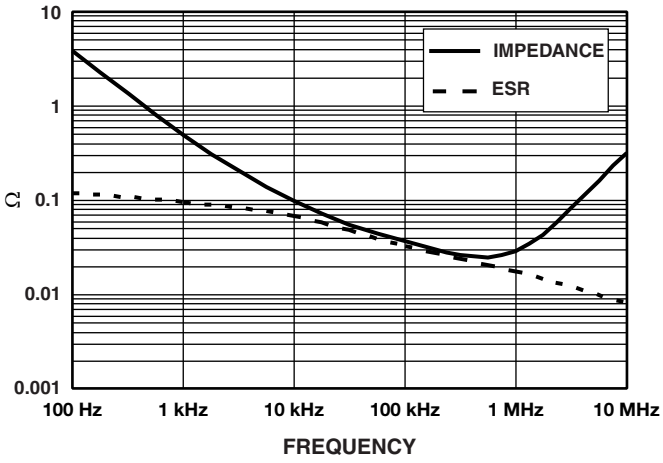

591D 470 - 6.3 V R/20H CASE

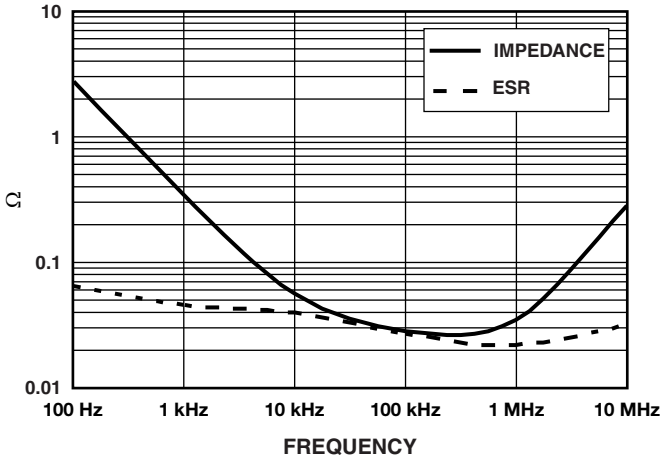

"A" CASE

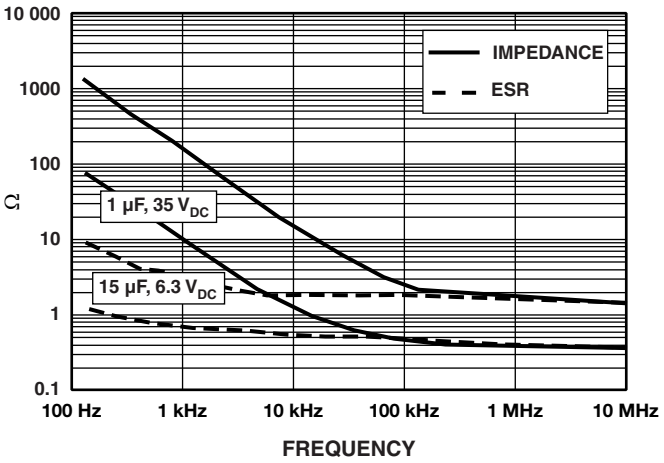

"B" CASE

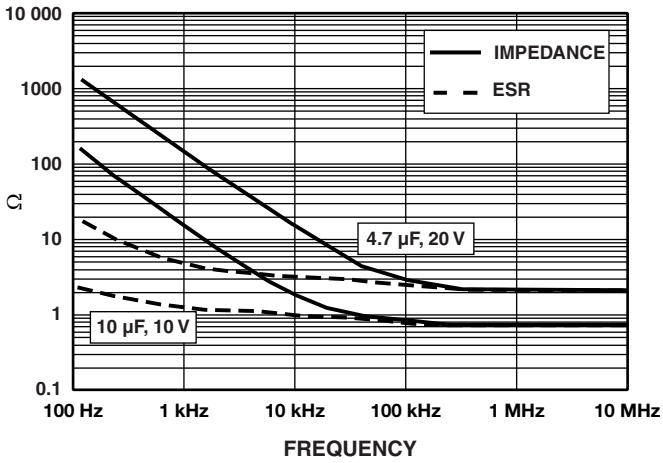

For technical questions, contact: tantalum@vishay.com

THIS DOCUMENT IS SUBJECT TO CHANGE WITHOUT NOTICE. THE PRODUCTS DESCRIBED HEREIN AND THIS DOCUMENT ARE SUBJECT TO SPECIFIC DISCLAIMERS, SET FORTH AT www.vishay.com/doc?91000

TYPICAL CURVES AT +25 °C, IMPEDANCE AND ESR VS. FREQUENCY

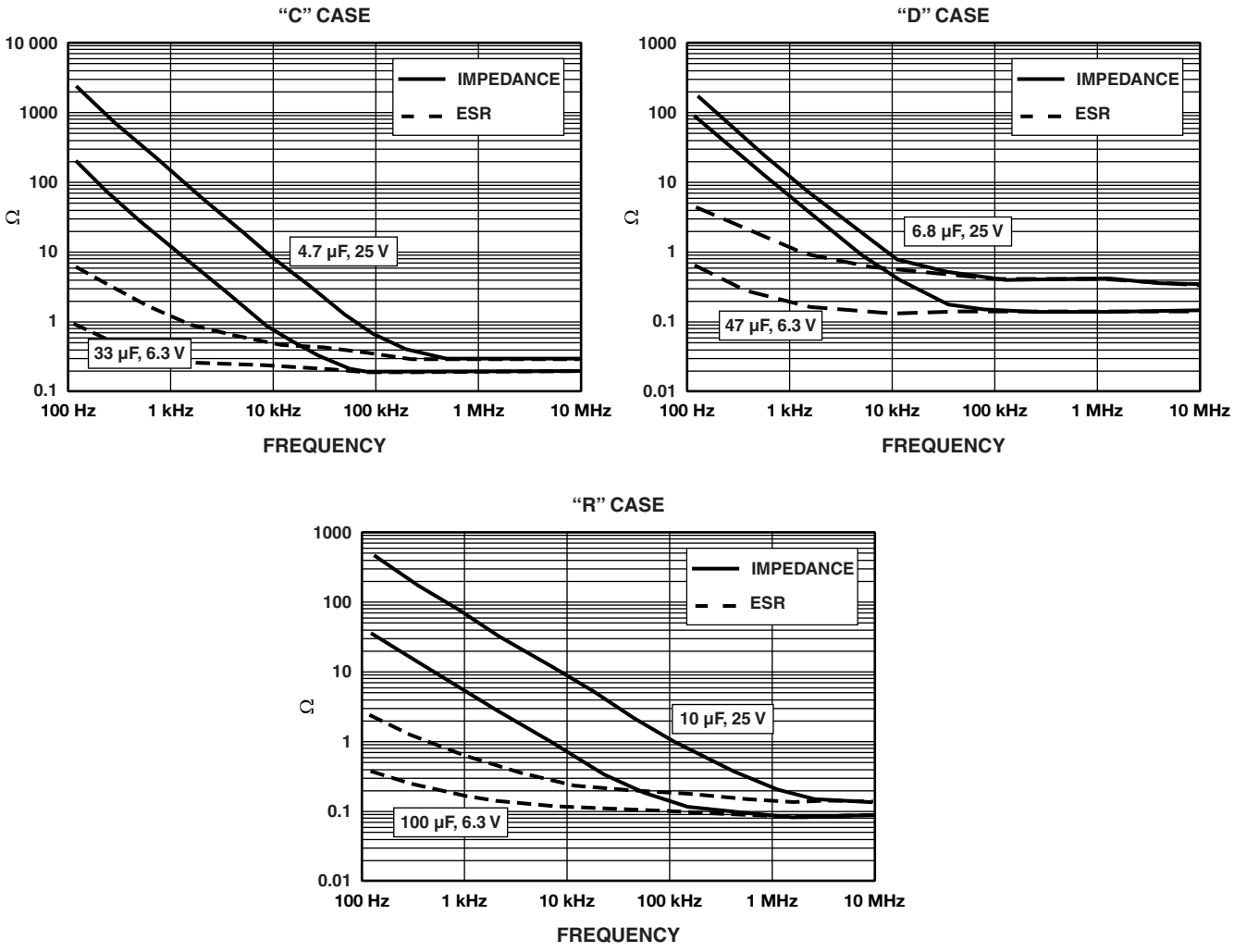

POWER DISSIPATION

CASE CODE	HEIGHT	MAXIMUM PERMISSIBLE POWER DISSIPATION AT +25 °C (W) IN FREE AIR
A	13H	0.055
A	15H	0.060
B	15H	0.080
B	20H	0.085
C	15H	0.100
C	16H	0.100
C	20H	0.110
D	15H	0.125
D	20H	0.140
M	20H	0.175
R	15H	0.150
R	16H	0.155
R	18H	0.165
R	20H	0.175

For technical questions, contact: tantalum@vishay.com
THIS DOCUMENT IS SUBJECT TO CHANGE WITHOUT NOTICE. THE PRODUCTS DESCRIBED HEREIN AND THIS DOCUMENT ARE SUBJECT TO SPECIFIC DISCLAIMERS, SET FORTH AT www.vishay.com/doc?91000

STANDARD PACKAGING QUANTITY			
CASE CODE	HEIGHT	UNITS PER REEL	
		7" REEL	13" REEL
A	Any	2500	10 000
B	Any	2000	8000
C	Any	1000	4000
D	Any	1000	4000
M	20H	1000	2500
R	15H	1000	4000
R	16H; 18H; 20H	1000	2500

PRODUCT INFORMATION	
Conformal Coated Guide	www.vishay.com/doc?40150
Pad Dimensions	
Packaging Dimensions	
Moisture Sensitivity (MSL)	www.vishay.com/doc?40135
SELECTOR GUIDES	
Solid Tantalum Selector Guide	www.vishay.com/doc?49053
Solid Tantalum Chip Capacitors	www.vishay.com/doc?40091
FAQ	
Frequently Asked Questions	www.vishay.com/doc?40110

For technical questions, contact: tantalum@vishay.com
THIS DOCUMENT IS SUBJECT TO CHANGE WITHOUT NOTICE. THE PRODUCTS DESCRIBED HEREIN AND THIS DOCUMENT ARE SUBJECT TO SPECIFIC DISCLAIMERS, SET FORTH AT www.vishay.com/doc?91000

Guide for Conformal Coated Tantalum Capacitors

INTRODUCTION

Tantalum electrolytic capacitors are the preferred choice in applications where volumetric efficiency, stable electrical parameters, high reliability, and long service life are primary considerations. The stability and resistance to elevated temperatures of the tantalum / tantalum oxide / manganese dioxide system make solid tantalum capacitors an appropriate choice for today's surface mount assembly technology.

Vishay Sprague has been a pioneer and leader in this field, producing a large variety of tantalum capacitor types for consumer, industrial, automotive, military, and aerospace electronic applications.

Tantalum is not found in its pure state. Rather, it is commonly found in a number of oxide minerals, often in combination with Columbium ore. This combination is known as “tantalite” when its contents are more than one-half tantalum. Important sources of tantalite include Australia, Brazil, Canada, China, and several African countries. Synthetic tantalite concentrates produced from tin slags in Thailand, Malaysia, and Brazil are also a significant raw material for tantalum production.

Electronic applications, and particularly capacitors, consume the largest share of world tantalum production. Other important applications for tantalum include cutting tools (tantalum carbide), high temperature super alloys, chemical processing equipment, medical implants, and military ordnance.

Vishay Sprague is a major user of tantalum materials in the form of powder and wire for capacitor elements and rod and sheet for high temperature vacuum processing.

THE BASICS OF TANTALUM CAPACITORS

Most metals form crystalline oxides which are non-protecting, such as rust on iron or black oxide on copper. A few metals form dense, stable, tightly adhering, electrically insulating oxides. These are the so-called “valve” metals and include titanium, zirconium, niobium, tantalum, hafnium, and aluminum. Only a few of these permit the accurate control of oxide thickness by electrochemical means. Of these, the most valuable for the electronics industry are aluminum and tantalum.

Capacitors are basic to all kinds of electrical equipment, from radios and television sets to missile controls and automobile ignitions. Their function is to store an electrical charge for later use.

Capacitors consist of two conducting surfaces, usually metal plates, whose function is to conduct electricity. They are separated by an insulating material or dielectric. The dielectric used in all tantalum electrolytic capacitors is tantalum pentoxide.

Tantalum pentoxide compound possesses high-dielectric strength and a high-dielectric constant. As capacitors are being manufactured, a film of tantalum pentoxide is applied to their electrodes by means of an electrolytic process. The film is applied in various thicknesses and at various voltages and although transparent to begin with, it takes on different colors as light refracts through it. This coloring occurs on the tantalum electrodes of all types of tantalum capacitors.

Rating for rating, tantalum capacitors tend to have as much as three times better capacitance / volume efficiency than aluminum electrolytic capacitors. An approximation of the capacitance / volume efficiency of other types of capacitors may be inferred from the following table, which shows the dielectric constant ranges of the various materials used in each type. Note that tantalum pentoxide has a dielectric constant of 26, some three times greater than that of aluminum oxide. This, in addition to the fact that extremely thin films can be deposited during the electrolytic process mentioned earlier, makes the tantalum capacitor extremely efficient with respect to the number of microfarads available per unit volume. The capacitance of any capacitor is determined by the surface area of the two conducting plates, the distance between the plates, and the dielectric constant of the insulating material between the plates.

COMPARISON OF CAPACITOR DIELECTRIC CONSTANTS

DIELECTRIC	e DIELECTRIC CONSTANT
Air or vacuum	1.0
Paper	2.0 to 6.0
Plastic	2.1 to 6.0
Mineral oil	2.2 to 2.3
Silicone oil	2.7 to 2.8
Quartz	3.8 to 4.4
Glass	4.8 to 8.0
Porcelain	5.1 to 5.9
Mica	5.4 to 8.7
Aluminum oxide	8.4
Tantalum pentoxide	**26**
Ceramic	12 to 400K

In the tantalum electrolytic capacitor, the distance between the plates is very small since it is only the thickness of the tantalum pentoxide film. As the dielectric constant of the tantalum pentoxide is high, the capacitance of a tantalum capacitor is high if the area of the plates is large:

$$C = \frac{eA}{t}$$

where

C = capacitance

e = dielectric constant

A = surface area of the dielectric

t = thickness of the dielectric

Tantalum capacitors contain either liquid or solid electrolytes. In solid electrolyte capacitors, a dry material (manganese dioxide) forms the cathode plate. A tantalum lead is embedded in or welded to the pellet, which is in turn connected to a termination or lead wire. The drawings show the construction details of the surface mount types of tantalum capacitors shown in this catalog.

For technical questions, contact: tantalum@vishay.com

THIS DOCUMENT IS SUBJECT TO CHANGE WITHOUT NOTICE. THE PRODUCTS DESCRIBED HEREIN AND THIS DOCUMENT ARE SUBJECT TO SPECIFIC DISCLAIMERS, SET FORTH AT www.vishay.com/doc?91000

SOLID ELECTROLYTE TANTALUM CAPACITORS

Solid electrolyte capacitors contain manganese dioxide, which is formed on the tantalum pentoxide dielectric layer by impregnating the pellet with a solution of manganous nitrate. The pellet is then heated in an oven, and the manganous nitrate is converted to manganese dioxide.

The pellet is next coated with graphite, followed by a layer of metallic silver, which provides a conductive surface between the pellet and the can in which it will be enclosed.

After assembly, the capacitors are tested and inspected to assure long life and reliability. It offers excellent reliability and high stability for consumer and commercial electronics with the added feature of low cost.

Surface mount designs of “Solid Tantalum” capacitors use lead frames or lead frameless designs as shown in the accompanying drawings.

TANTALUM CAPACITORS FOR ALL DESIGN CONSIDERATIONS

Solid electrolyte designs are the least expensive for a given rating and are used in many applications where their very small size for a given unit of capacitance is of importance. They will typically withstand up to about 10 % of the rated DC working voltage in a reverse direction. Also important are their good low temperature performance characteristics and freedom from corrosive electrolytes.

Vishay Sprague patented the original solid electrolyte capacitors and was the first to market them in 1956. Vishay Sprague has the broadest line of tantalum capacitors and has continued its position of leadership in this field. Data sheets covering the various types and styles of Vishay Sprague capacitors for consumer and entertainment electronics, industry, and military applications are available where detailed performance characteristics must be specified.

TYPE 195D, 591D, 592D / 592W, 594D, 595D, 695D, T95, 14002

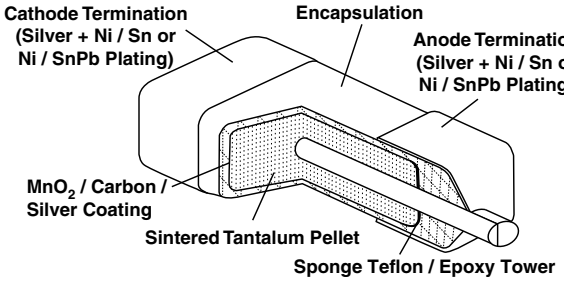

TYPE 597D / T97 / 13008

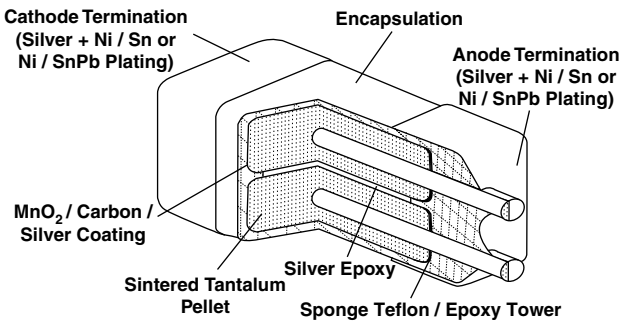

TYPE 194D

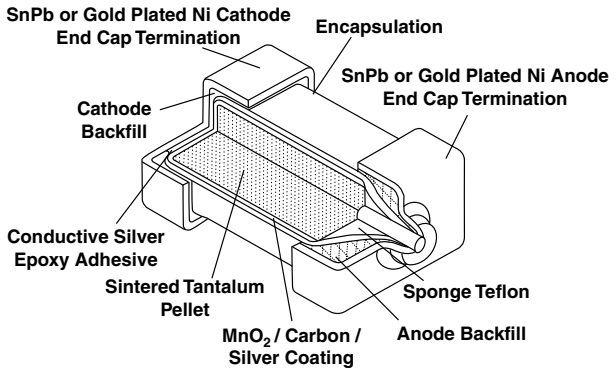

TYPE T96

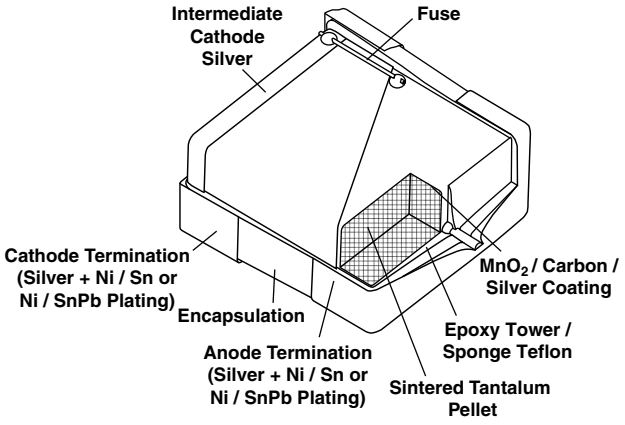

TYPE T98

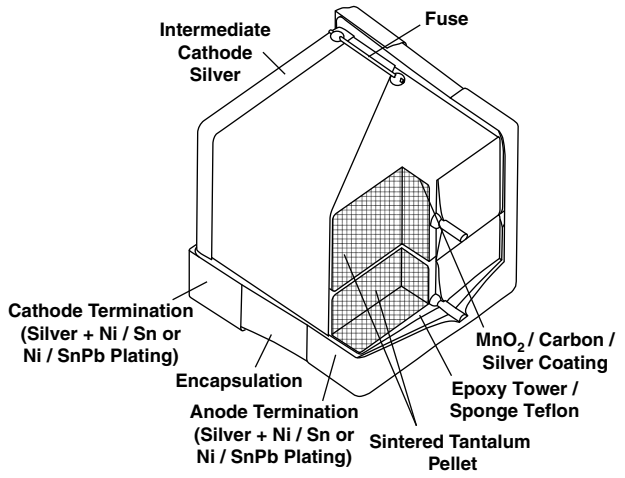

Note

- For all types of conformal coated capacitors, tantalum wire to tantalum pellet attachment method could be either embedded (see images on the left side of the page) or welded (see images on the right side), depending on specific rating

For technical questions, contact: tantalum@vishay.com

THIS DOCUMENT IS SUBJECT TO CHANGE WITHOUT NOTICE. THE PRODUCTS DESCRIBED HEREIN AND THIS DOCUMENT ARE SUBJECT TO SPECIFIC DISCLAIMERS, SET FORTH AT www.vishay.com/doc?91000

COMMERCIAL PRODUCTS

SOLID TANTALUM CAPACITORS - CONFORMAL COATED					
SERIES	**592W**	**592D**	**591D**	**595D**	**594D**
PRODUCT IMAGE					
TYPE	Surface mount TANTAMOUNT™ chip, conformal coated				
FEATURES	Low profile, robust design for use in pulsed applications	Low profile, maximum CV	Low profile, low ESR, maximum CV	Maximum CV	Low ESR, maximum CV
TEMPERATURE RANGE	-55 °C to +125 °C (above 40 °C, voltage deratig is required)	-55 °C to +125 °C (above 85 °C, voltage derating is required)			
CAPACITANCE RANGE	330 µF to 2200 µF	1 µF to 2200 µF	1 µF to 1500 µF	0.1 µF to 1500 µF	1 µF to 1500 µF
VOLTAGE RANGE	6 V to 10 V	4 V to 50 V	4 V to 50 V	4 V to 50 V	4 V to 50 V
CAPACITANCE TOLERANCE	± 20 %	± 10 %, ± 20 %	± 10 %, ± 20 %	± 10 %, ± 20 %	± 10 %, ± 20 %
LEAKAGE CURRENT		0.01 CV or 0.5 µA, whichever is greater			
DISSIPATION FACTOR	14 % to 45 %	4 % to 50 %	4 % to 50 %	4 % to 20 %	4 % to 20 %
CASE CODES	C, M, X	S, A, B, C, D, R, M, X	A, B, C, D, R, M	T, S, A, B, C, D, G, M, R	B, C, D, R
TERMINATION	100 % matte tin	100 % matte tin standard, tin / lead and gold plated available			

SOLID TANTALUM CAPACITORS - CONFORMAL COATED				
SERIES	**597D**	**695D**	**195D**	**194D**
PRODUCT IMAGE				
TYPE	TANTAMOUNT™ chip, conformal coated			
FEATURES	Ultra low ESR, maximum CV, multi-anode	Pad compatible with 194D and CWR06	US and European case sizes	Industrial version of CWR06 / CWR16
TEMPERATURE RANGE	-55 °C to +125 °C (above 85 °C, voltage derating is required)			
CAPACITANCE RANGE	10 µF to 2200 µF	0.1 µF to 270 µF	0.1 µF to 330 µF	0.1 µF to 330 µF
VOLTAGE RANGE	4 V to 75 V	4 V to 50 V	2 V to 50 V	4 V to 50 V
CAPACITANCE TOLERANCE	± 10 %, ± 20 %			
LEAKAGE CURRENT	0.01 CV or 0.5 µA, whichever is greater			
DISSIPATION FACTOR	6 % to 20 %	4 % to 8 %	4 % to 8 %	4 % to 10 %
CASE CODES	V, D, E, R, F, Z, M, H	A, B, D, E, F, G, H	C, S, V, X, Y, Z, R, A, B, D, E, F, G, H	A, B, C, D, E, F, G, H
TERMINATION	100 % matte tin standard, tin / lead solder plated available	100 % matte tin standard, tin / lead and gold plated available		Gold plated standard; tin / lead solder plated and hot solder dipped available

For technical questions, contact: tantalum@vishay.com

THIS DOCUMENT IS SUBJECT TO CHANGE WITHOUT NOTICE. THE PRODUCTS DESCRIBED HEREIN AND THIS DOCUMENT ARE SUBJECT TO SPECIFIC DISCLAIMERS, SET FORTH AT www.vishay.com/doc?91000

HIGH RELIABILITY PRODUCTS

SOLID TANTALUM CAPACITORS - CONFORMAL COATED					
SERIES	**CWR06**	**CWR16**	**CWR26**	**13008**	**14002**
PRODUCT IMAGE					
TYPE	TANTAMOUNT™ chip, conformal coated				
FEATURES	MIL-PRF-55365/4 qualified	MIL-PRF-55365/13 qualified	MIL-PRF-55365/13 qualified	DLA approved	
TEMPERATURE RANGE	-55 °C to +125 °C (above 85 °C, voltage derating is required)				
CAPACITANCE RANGE	0.10 µF to 100 µF	0.33 µF to 330 µF	10 µF to 100 µF	10 µF to 1500 µF	4.7 µF to 680 µF
VOLTAGE RANGE	4 V to 50 V	4 V to 35 V	15 V to 35 V	4 V to 63 V	4 V to 50 V
CAPACITANCE TOLERANCE	± 5 %, ± 10 %, ± 20 %	± 5 %, ± 10 %, ± 20 %	± 5 %, ± 10 %, ± 20 %	± 10 %, ± 20 %	± 10 %, ± 20 %
LEAKAGE CURRENT	0.01 CV or 1.0 µA, whichever is greater			0.01 CV or 0.5 µA, whichever is greater	
DISSIPATION FACTOR	6 % to 10 %	6 % to 10 %	6 % to 12 %	6 % to 20 %	6 % to 14 %
CASE CODES	A, B, C, D, E, F, G, H	A, B, C, D, E, F, G, H	F, G, H	V, E, F, R, Z, D, M, H, N	B, C, D, R
TERMINATION	Gold plated; tin / lead; tin / lead solder fused			Tin / lead	

SOLID TANTALUM CAPACITORS - CONFORMAL COATED				
SERIES	**T95**	**T96**	**T97**	**T98**
PRODUCT IMAGE				
TYPE	TANTAMOUNT™ chip, Hi-Rel COTS, conformal coated			
FEATURES	High reliability	High reliability, built in fuse	High reliability, ultra low ESR, multi-anode	High reliability, ultra low ESR, built in fuse, multi-anode
TEMPERATURE RANGE	-55 °C to +125 °C (above 85 °C, voltage derating is required)			
CAPACITANCE RANGE	0.15 µF to 680 µF	10 µF to 680 µF	10 µF to 2200 µF	10 µF to 1500 µF
VOLTAGE RANGE	4 V to 50 V	4 V to 50 V	4 V to 75 V	4 V to 75 V
CAPACITANCE TOLERANCE	± 10 %, ± 20 %	± 10 %, ± 20 %	± 10 %, ± 20 %	± 10 %, ± 20 %
LEAKAGE CURRENT	0.01 CV or 0.5 µA, whichever is greater			
DISSIPATION FACTOR	4 % to 14 %	6 % to 14 %	6 % to 20 %	6 % to 10 %
CASE CODES	A, B, C, D, R, S, V, X, Y, Z	R	V, E, F, R, Z, D, M, H, N	V, E, F, R, Z, M, H
TERMINATION	100 % matte tin, tin / lead			

For technical questions, contact: tantalum@vishay.com

THIS DOCUMENT IS SUBJECT TO CHANGE WITHOUT NOTICE. THE PRODUCTS DESCRIBED HEREIN AND THIS DOCUMENT ARE SUBJECT TO SPECIFIC DISCLAIMERS, SET FORTH AT www.vishay.com/doc?91000

TAPE AND REEL PACKAGING in inches [millimeters]

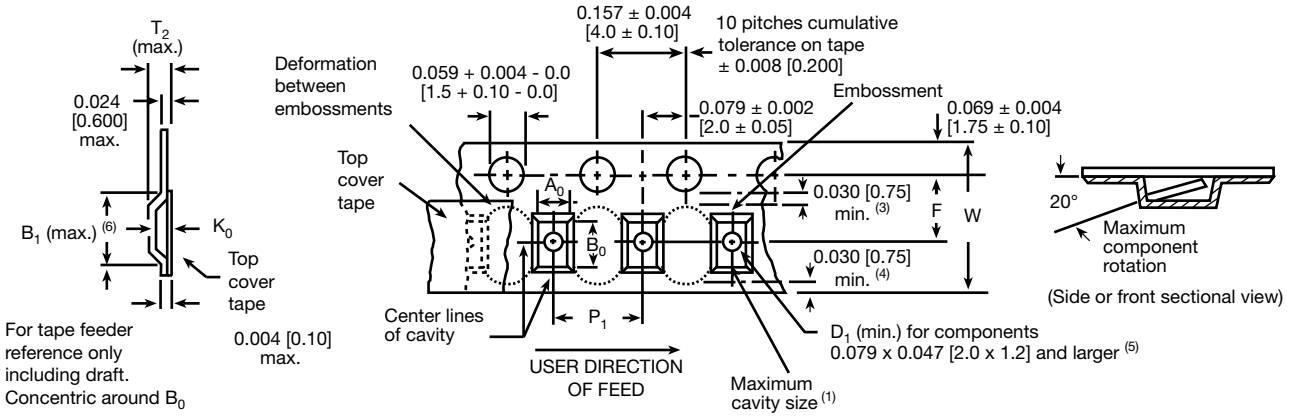

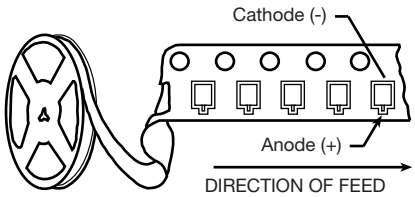

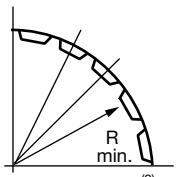

R minimum:
8 mm = 0.984" (25 mm)
12 mm and 16 mm = 1.181" (30 mm)

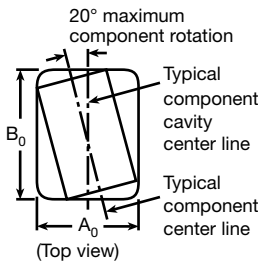

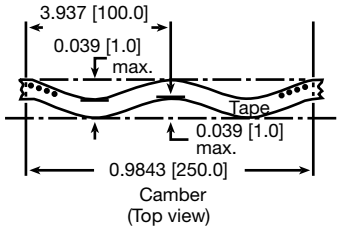

Allowable camber to be 0.039/3.937 [1/100]
Non-cumulative over 9.843 [250.0]

Tape and reel specifications: all case sizes are available on plastic embossed tape per EIA-481. Standard reel diameter is 7" (178 mm).

Lengthwise orientation at capacitors in tape

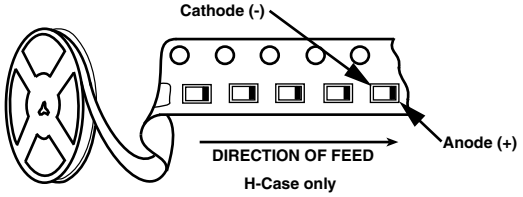

Notes

- Metric dimensions will govern. Dimensions in inches are rounded and for reference only

(1) A_0, B_0, K_0, are determined by the maximum dimensions to the ends of the terminals extending from the component body and / or the body dimensions of the component. The clearance between the ends of the terminals or body of the component to the sides and depth of the cavity (A_0, B_0, K_0) must be within 0.002" (0.05 mm) minimum and 0.020" (0.50 mm) maximum. The clearance allowed must also prevent rotation of the component within the cavity of not more than 20°

(2) Tape with components shall pass around radius “R” without damage. The minimum trailer length may require additional length to provide “R” minimum for 12 mm embossed tape for reels with hub diameters approaching N minimum

(3) This dimension is the flat area from the edge of the sprocket hole to either outward deformation of the carrier tape between the embossed cavities or to the edge of the cavity whichever is less

(4) This dimension is the flat area from the edge of the carrier tape opposite the sprocket holes to either the outward deformation of the carrier tape between the embossed cavity or to the edge of the cavity whichever is less

(5) The embossed hole location shall be measured from the sprocket hole controlling the location of the embossment. Dimensions of embossment location shall be applied independent of each other

(6) B_1 dimension is a reference dimension tape feeder clearance only

For technical questions, contact: tantalum@vishay.com

THIS DOCUMENT IS SUBJECT TO CHANGE WITHOUT NOTICE. THE PRODUCTS DESCRIBED HEREIN AND THIS DOCUMENT ARE SUBJECT TO SPECIFIC DISCLAIMERS, SET FORTH AT www.vishay.com/doc?91000

CARRIER TAPE DIMENSIONS in inches [millimeters]						
TAPE WIDTH	**W**	**D_0**	**P_2**	**F**	**E_1**	**$E_{2\ min.}$**
8 mm	0.315 + 0.012 / - 0.004 [8.0 + 0.3 / - 0.1]	0.059 + 0.004 / - 0 [1.5 + 0.1 / - 0]	0.078 ± 0.0019 [2.0 ± 0.05]	0.14 ± 0.0019 [3.5 ± 0.05]	0.324 ± 0.004 [1.75 ± 0.1]	0.246 [6.25]
12 mm	0.479 + 0.012 / - 0.004 [12.0 + 0.3 / - 0.1]			0.216 ± 0.0019 [5.5 ± 0.05]		0.403 [10.25]
16 mm	0.635 + 0.012 / - 0.004 [16.0 + 0.3 / - 0.1]		0.078 ± 0.004 [2.0 ± 0.1]	0.295 ± 0.004 [7.5 ± 0.1]		0.570 [14.25]
24 mm	0.945 ± 0.012 [24.0 ± 0.3]			0.453 ± 0.004 [11.5 ± 0.1]		0.876 [22.25]

CARRIER TAPE DIMENSIONS in inches [millimeters]					
TYPE	**CASE CODE**	**TAPE WIDTH W IN mm**	**P_1**	**$K_{0\ max.}$**	**$B_{1\ max.}$**
592D 592W 591D	A	8	0.157 ± 0.004 [4.0 ± 0.10]	0.058 [1.47]	0.149 [3.78]
	B	12		0.088 [2.23]	0.166 [4.21]
	C	12	0.315 ± 0.004 [8.0 ± 0.10]	0.088 [2.23]	0.290 [7.36]
	D	12		0.088 [2.23]	0.300 [7.62]
	M	16		0.091 [2.30]	0.311 [7.90]
	R	12		0.088 [2.23]	0.296 [7.52]
	S	8	0.157 ± 0.004 [4.0 ± 0.10]	0.058 [1.47]	0.139 [3.53]
	T	12		0.088 [2.23]	0.166 [4.21]
	X	24	0.472 ± 0.004 [12.0 ± 0.10]	0.011 [2.72]	0.594 [15.1]
595D 594D	A	8	0.157 ± 0.004 [4.0 ± 0.10]	0.063 [1.60]	0.152 [3.86]
	B	12		0.088 [2.23]	0.166 [4.21]
	C	12	0.315 ± 0.004 [8.0 ± 0.10]	0.118 [2.97]	0.290 [7.36]
	D	12		0.119 [3.02]	0.296 [7.52]
	G	12		0.111 [2.83]	0.234 [5.95]
	H	12		0.098 [2.50]	0.232 [5.90]
	M	12	0.157 ± 0.004 [4.0 ± 0.10]	0.085 [2.15]	0.152 [3.85]
	R	12	0.315 ± 0.004 [8.0 ± 0.10]	0.148 [3.78]	0.296 [7.52]
	S	8	0.157 ± 0.004 [4.0 ± 0.10]	0.058 [1.47]	0.149 [3.78]
	T	8		0.054 [1.37]	0.093 [2.36]
695D	A	8	0.157 ± 0.004 [4.0 ± 0.10]	0.058 [1.47]	0.139 [3.53]
	B	12		0.059 [1.50]	0.189 [4.80]
	D	12		0.063 [1.62]	0.191 [4.85]
	E	12		0.074 [1.88]	0.239 [6.07]
	F	12	0.315 ± 0.004 [8.0 ± 0.10]	0.075 [1.93]	0.259 [6.58]
	G	12	0.157 ± 0.004 [4.0 ± 0.10]	0.109 [2.77]	0.301 [7.65]
	H	16	0.315 ± 0.004 [8.0 ± 0.10]	0.124 [3.15]	0.31 [7.87]

For technical questions, contact: tantalum@vishay.com
THIS DOCUMENT IS SUBJECT TO CHANGE WITHOUT NOTICE. THE PRODUCTS DESCRIBED HEREIN AND THIS DOCUMENT ARE SUBJECT TO SPECIFIC DISCLAIMERS, SET FORTH AT www.vishay.com/doc?91000

CARRIER TAPE DIMENSIONS in inches [millimeters]					
TYPE	**CASE CODE**	**TAPE WIDTH W IN mm**	**P_1**	**$K_{0\ max.}$**	**$B_{1\ max.}$**
195D	A	8	0.157 ± 0.004 [4.0 ± 0.10]	0.058 [1.47]	0.139 [3.53]
	B	12		0.059 [1.50]	0.189 [4.80]
	C	8		0.054 [1.37]	0.093 [2.36]
	D	12		0.067 [1.70]	0.179 [4.55]
	E	12		0.074 [1.88]	0.239 [6.07]
	F	12	0.315 ± 0.004 [8.0 ± 0.10]	0.076 [1.93]	0.259 [6.58]
	G	12	0.157 ± 0.004 [4.0 ± 0.10]	0.109 [2.77]	0.301 [7.65]
	H (1)	12	0.472 ± 0.004 [12.0 ± 0.1]	0.122 [3.11]	0.163 [4.14]
	R	12	0.315 ± 0.004 [8.0 ± 0.10]	0.149 [3.78]	0.296 [7.52]
	S	8	0.157 ± 0.004 [4.0 ± 0.10]	0.058 [1.47]	0.149 [3.78]
	V	8		0.060 [1.52]	0.150 [3.80]
	X	12		0.069 [1.75]	0.296 [7.52]
	Y	12		0.089 [2.26]	0.296 [7.52]
	Z	12		0.114 [2.89]	0.288 [7.31]
194D CWR06 CWR16 CWR26	A	8	0.157 ± 0.004 [4.0 ± 0.10]	0.069 [1.75]	0.139 [3.53]
	B	12		0.073 [1.85]	0.189 [4.80]
	C	12		0.069 [1.75]	0.244 [6.20]
	D	12		0.068 [1.72]	0.191 [4.85]
	E	12		0.074 [1.88]	0.239 [6.07]
	F	12	0.315 ± 0.004 [8.0 ± 0.10]	0.091 [2.31]	0.262 [6.65]
	G	16		0.134 [3.40]	0.289 [7.34]
	H	16		0.129 [3.28]	0.319 [8.10]
597D T97 13008	D	16	0.317 ± 0.004 [8.0 ± 0.10]	0.150 [3.80]	0.313 [7.95]
	E	16		0.173 [4.40]	0.343 [8.70]
	F	16	0.476 ± 0.004 [12.0 ± 0.1]	0.205 [5.20]	0.309 [7.85]
	H	16		0.224 [5.70]	0.313 [7.95]
	M	16		0.193 [4.90]	0.339 [8.60]
	N	16		0.283 [7.20]	0.323 [8.20]
	R	16		0.159 [4.05]	0.313 [7.95]
	V	12	0.317 ± 0.004 [8.0 ± 0.10]	0.088 [2.23]	0.300 [7.62]
	Z	16	0.476 ± 0.004 [12.0 ± 0.1]	0.239 [6.06]	0.311 [7.90]
T95	A	8	0.157 ± 0.004 [4.0 ± 0.10]	0.063 [1.60]	0.152 [3.86]
	B	12		0.088 [2.23]	0.166 [4.21]
	C	12		0.117 [2.97]	0.290 [7.36]
	D	12	0.317 ± 0.004 [8.0 ± 0.10]	0.119 [3.02]	0.296 [7.52]
	R	12		0.149 [3.78]	0.296 [7.52]
	S	8	0.157 ± 0.004 [4.0 ± 0.10]	0.058 [1.47]	0.149 [3.78]
	V	8		0.060 [1.52]	0.150 [3.80]
	X	12		0.069 [1.75]	0.296 [7.52]
	Y	12		0.089 [2.26]	0.296 [7.52]
	Z	12		0.114 [2.89]	0.288 [7.31]
14002	B	12	0.157 ± 0.004 [4.0 ± 0.10]	0.088 [2.23]	0.166 [4.21]
	C	12		0.117 [2.97]	0.290 [7.36]
	D	12	0.317 ± 0.004 [8.0 ± 0.10]	0.119 [3.02]	0.296 [7.52]
	R	12		0.149 [3.78]	0.296 [7.52]
T96	R	16	0.476 ± 0.004 [12.0 ± 0.1]	0.159 [4.05]	0.313 [7.95]
T98	F	16	0.476 ± 0.004 [12.0 ± 0.1]	0.239 [6.06]	0.311 [7.90]
	M	16		0.193 [4.90]	0.339 [8.60]
	Z	16		0.272 [6.90]	0.307 [7.80]

Note

(1) H case only, packaging code T: lengthwise orientation at capacitors in tape

For technical questions, contact: tantalum@vishay.com

THIS DOCUMENT IS SUBJECT TO CHANGE WITHOUT NOTICE. THE PRODUCTS DESCRIBED HEREIN AND THIS DOCUMENT ARE SUBJECT TO SPECIFIC DISCLAIMERS, SET FORTH AT www.vishay.com/doc?91000

PAD DIMENSIONS in inches [millimeters]

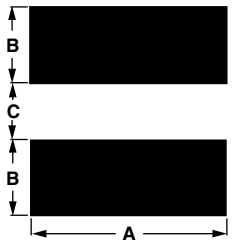

CASE CODE	WIDTH (A)	PAD METALLIZATION (B)	SEPARATION (C)
592D / W - 591D			
A	0.075 [1.9]	0.050 [1.3]	0.050 [1.3]
B	0.118 [3.0]	0.059 [1.5]	0.059 [1.5]
C	0.136 [3.5]	0.090 [2.3]	0.122 [3.1]
D	0.180 [4.6]	0.090 [2.3]	0.134 [3.4]
M	0.256 [6.5]	Anode pad: 0.095 [2.4] Cathode pad: 0.067 [1.7]	0.138 [3.5]
R	0.240 [6.1]	Anode pad: 0.095 [2.4] Cathode pad: 0.067 [1.7]	0.118 [3.0]
S	0.067 [1.7]	0.032 [0.8]	0.043 [1.1]
X	0.310 [7.9]	0.120 [3.0]	0.360 [9.2]
595D - 594D			
T	0.059 [1.5]	0.028 [0.7]	0.024 [0.6]
S	0.067 [1.7]	0.032 [0.8]	0.043 [1.1]
A	0.083 [2.1]	0.050 [1.3]	0.050 [1.3]
B	0.118 [3.0]	0.059 [1.5]	0.059 [1.5]
C	0.136 [3.5]	0.090 [2.3]	0.122 [3.1]
D	0.180 [4.6]	0.090 [2.3]	0.134 [3.4]
G	0.156 [4.05]	0.090 [2.3]	0.082 [2.1]
M	0.110 [2.8]	0.087 [2.2]	0.134 [3.4]
R	0.248 [6.3]	0.090 [2.3]	0.140 [3.6]
195D			
A	0.067 [1.7]	0.043 [1.1]	0.028 [0.7]
B	0.063 [1.6]	0.047 [1.2]	0.047 [1.2]
C	0.059 [1.5]	0.031 [0.8]	0.024 [0.6]
D	0.090 [2.3]	0.055 [1.4]	0.047 [1.2]
E	0.090 [2.3]	0.055 [1.4]	0.079 [2.0]
F	0.140 [3.6]	0.063 [1.6]	0.087 [2.2]
G	0.110 [2.8]	0.059 [1.5]	0.126 [3.2]
H	0.154 [3.9]	0.063 [1.6]	0.140 [3.6]
N	0.244 [6.2]	0.079 [2.0]	0.118 [3.0]
R	0.248 [6.3]	0.090 [2.3]	0.140 [3.6]
S	0.079 [2.0]	0.039 [1.0]	0.039 [1.0]
V	0.114 [2.9]	0.039 [1.0]	0.039 [1.0]
X	0.118 [3.0]	0.067 [1.7]	0.122 [3.1]
Y	0.118 [3.0]	0.067 [1.7]	0.122 [3.1]
Z	0.118 [3.0]	0.067 [1.7]	0.122 [3.1]

For technical questions, contact: tantalum@vishay.com

THIS DOCUMENT IS SUBJECT TO CHANGE WITHOUT NOTICE. THE PRODUCTS DESCRIBED HEREIN AND THIS DOCUMENT ARE SUBJECT TO SPECIFIC DISCLAIMERS, SET FORTH AT www.vishay.com/doc?91000

PAD DIMENSIONS in inches [millimeters]

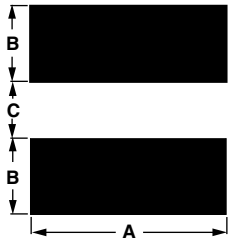

CASE CODE	WIDTH (A)	PAD METALLIZATION (B)	SEPARATION (C)
CWR06 / CWR16 / CWR26 - 194D - 695D			
A	0.065 [1.6]	0.50 [1.3]	0.040 [1.0]
B	0.065 [1.6]	0.70 [1.8]	0.055 [1.4]
C	0.065 [1.6]	0.70 [1.8]	0.120 [3.0]
D	0.115 [2.9]	0.70 [1.8]	0.070 [1.8]
E	0.115 [2.9]	0.70 [1.8]	0.120 [3.0]
F	0.150 [3.8]	0.70 [1.8]	0.140 [3.6]
G	0.125 [3.2]	0.70 [1.8]	0.170 [4.3]
H	0.165 [4.2]	0.90 [2.3]	0.170 [4.3]
T95			
B	0.120 [3.0]	0.059 [1.5]	0.059 [1.5]
C	0.136 [3.5]	0.090 [2.3]	0.120 [3.1]
D	0.180 [4.6]	0.090 [2.3]	0.136 [3.47]
R	0.248 [6.3]	0.090 [2.3]	0.140 [3.6]
S	0.080 [2.03]	0.040 [1.02]	0.040 [1.02]
V	0.114 [2.9]	0.040 [1.02]	0.040 [1.02]
X, Y, Z	0.114 [2.9]	0.065 [1.65]	0.122 [3.1]
14002			
B	0.120 [3.0]	0.059 [1.5]	0.059 [1.5]
C	0.136 [3.5]	0.090 [2.3]	0.120 [3.1]
D	0.180 [4.6]	0.090 [2.3]	0.136 [3.47]
R	0.248 [6.3]	0.090 [2.3]	0.140 [3.6]
T96			
R	0.248 [6.3]	0.090 [2.3]	0.140 [3.6]
597D - T97 - T98 - 13008			
D, E, V	0.196 [4.9]	0.090 [2.3]	0.140 [3.6]
F, R, Z	0.260 [6.6]	0.090 [2.3]	0.140 [3.6]
M, H, N	0.284 [7.2]	0.090 [2.3]	0.140 [3.6]

For technical questions, contact: tantalum@vishay.com

THIS DOCUMENT IS SUBJECT TO CHANGE WITHOUT NOTICE. THE PRODUCTS DESCRIBED HEREIN AND THIS DOCUMENT ARE SUBJECT TO SPECIFIC DISCLAIMERS, SET FORTH AT www.vishay.com/doc?91000

RECOMMENDED REFLOW PROFILES

Capacitors should withstand reflow profile as per J-STD-020 standard, three cycles.

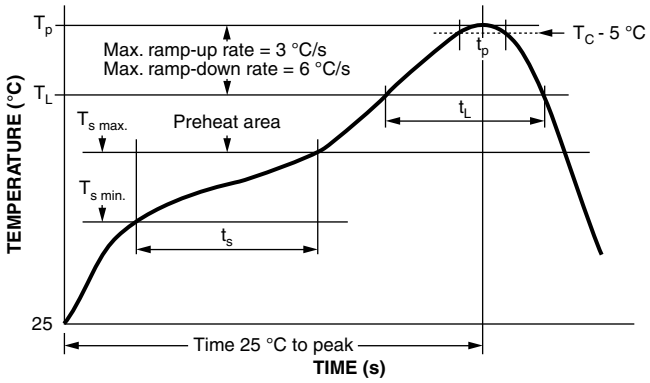

PROFILE FEATURE	SnPb EUTECTIC ASSEMBLY	LEAD (Pb)-FREE ASSEMBLY
Preheat / soak		
Temperature min. ($T_{s\ min.}$)	100 °C	150 °C
Temperature max. ($T_{s\ max.}$)	150 °C	200 °C
Time (t_s) from ($T_{s\ min.}$ to $T_{s\ max.}$)	60 s to 120 s	60 s to 120 s
Ramp-up		
Ramp-up rate (T_L to T_p)	3 °C/s max.	3 °C/s max.
Liquidus temperature (T_L)	183 °C	217 °C
Time (t_L) maintained above T_L	60 s to 150 s	60 s to 150 s
Peak package body temperature (T_p)	Depends on type and case – see table below	
Time (t_p)* within 5 °C of the specified classification temperature (T_c)	20 s	30 s
Ramp-down		
Ramp-down rate (T_p to T_L)	6 °C/s max.	6 °C/s max.
Time 25 °C to peak temperature	6 min max.	8 min max.

PEAK PACKAGE BODY TEMPERATURE (T_p)

TYPE / CASE CODE	PEAK PACKAGE BODY TEMPERATURE (T_p)	
	SnPb EUTECTIC PROCESS	LEAD (Pb)-FREE PROCESS
591D / 592D - all cases, except X25H, M and R cases	235 °C	260 °C
591D / 592D - X25H, M and R cases	220 °C	250 °C
594D / 595D - all cases except C, D, and R	235 °C	260 °C
594D / 595D - C, D, and R case	220 °C	250 °C
T95 A, B, S, V, X, Y cases	235 °C	260 °C
T95 C, D, R, and Z cases	220 °C	250 °C
14002 B case	235 °C	n/a
14002 C, D, and R cases	220 °C	n/a
T96 R case	220 °C	250 °C
195D all cases, except G, H, R, and Z	235 °C	260 °C
195D G, H, R, and Z cases	220 °C	250 °C
695D all cases, except G and H cases	235 °C	260 °C
695D G, H cases	220 °C	250 °C
597D, T97, T98 all cases, except V case	220 °C	250 °C
597D, T97, T98 V case	235 °C	260 °C
194D all cases, except H and G cases	235 °C	260 °C
194D H and G cases	220 °C	250 °C

For technical questions, contact: tantalum@vishay.com
THIS DOCUMENT IS SUBJECT TO CHANGE WITHOUT NOTICE. THE PRODUCTS DESCRIBED HEREIN AND THIS DOCUMENT ARE SUBJECT TO SPECIFIC DISCLAIMERS, SET FORTH AT www.vishay.com/doc?91000

GUIDE TO APPLICATION

1. **AC Ripple Current:** the maximum allowable ripple current shall be determined from the formula:

$$I_{RMS} = \sqrt{\frac{P}{R_{ESR}}}$$

where,

P = power dissipation in W at +25 °C as given in the tables in the product datasheets (Power Dissipation).

R_{ESR} = the capacitor equivalent series resistance at the specified frequency

2. **AC Ripple Voltage:** the maximum allowable ripple voltage shall be determined from the formula:

$$V_{RMS} = I_{RMS} \times Z$$

or, from the formula:

$$V_{RMS} = Z\sqrt{\frac{P}{R_{ESR}}}$$

where,

P = power dissipation in W at +25 °C as given in the tables in the product datasheets (Power Dissipation).

R_{ESR} = the capacitor equivalent series resistance at the specified frequency

Z = the capacitor impedance at the specified frequency

2.1 The sum of the peak AC voltage plus the applied DC voltage shall not exceed the DC voltage rating of the capacitor.

2.2 The sum of the negative peak AC voltage plus the applied DC voltage shall not allow a voltage reversal exceeding 10 % of the DC working voltage at +25 °C.

3. **Reverse Voltage:** solid tantalum capacitors are not intended for use with reverse voltage applied. However, they have been shown to be capable of withstanding momentary reverse voltage peaks of up to 10 % of the DC rating at 25 °C and 5 % of the DC rating at +85 °C.

4. **Temperature Derating:** if these capacitors are to be operated at temperatures above +25 °C, the permissible RMS ripple current shall be calculated using the derating factors as shown:

TEMPERATURE	DERATING FACTOR
+25 °C	1.0
+85 °C	0.9
+125 °C	0.4

5. **Power Dissipation:** power dissipation will be affected by the heat sinking capability of the mounting surface. Non-sinusoidal ripple current may produce heating effects which differ from those shown. It is important that the equivalent I_{RMS} value be established when calculating permissible operating levels. (Power dissipation calculated using derating factor (see paragraph 4)).

6. **Attachment:**

6.1 **Soldering:** capacitors can be attached by conventional soldering techniques: vapor phase, convection reflow, infrared reflow, and hot plate methods. The soldering profile charts show recommended time / temperature conditions for soldering. Preheating is recommended. The recommended maximum ramp rate is 3 °C per second. Attachment with a soldering iron is not recommended due to the difficulty of controlling temperature and time at temperature. The soldering iron must never come in contact with the capacitor. For details see www.vishay.com/doc?40214.

7. **Recommended Mounting Pad Geometries:** the nib must have sufficient clearance to avoid electrical contact with other components. The width dimension indicated is the same as the maximum width of the capacitor. This is to minimize lateral movement.

8. **Cleaning (Flux Removal) After Soldering:** TANTAMOUNT™ capacitors are compatible with all commonly used solvents such as TES, TMS, Prelete, Chlorethane, Terpene and aqueous cleaning media. However, CFC / ODS products are not used in the production of these devices and are not recommended. Solvents containing methylene chloride or other epoxy solvents should be avoided since these will attack the epoxy encapsulation material.

For technical questions, contact: tantalum@vishay.com

THIS DOCUMENT IS SUBJECT TO CHANGE WITHOUT NOTICE. THE PRODUCTS DESCRIBED HEREIN AND THIS DOCUMENT ARE SUBJECT TO SPECIFIC DISCLAIMERS, SET FORTH AT www.vishay.com/doc?91000

Conformal Coated Tantalum Capacitors

ELECTRICAL PERFORMANCE CHARACTERISTICS

ITEM	PERFORMANCE CHARACTERISTICS	
Category temperature range	-55 °C to +85 °C (to +125 °C with voltage derating)	
Capacitance tolerance	± 20 %, ± 10 %, tested via bridge method, at 25 °C, 120 Hz	
Dissipation factor	Limits per Standard Ratings table. Tested via bridge method, at 25 °C, 120 Hz	
ESR	Limits per Standard Ratings table. Tested via bridge method, at 25 °C, 100 kHz	
Leakage current	After application of rated voltage applied to capacitors for 5 min using a steady source of power with 1 kΩ resistor in series with the capacitor under test, leakage current at 25 °C is not more than 0.01 CV or 0.5 µA, whichever is greater. *Note that the leakage current varies with temperature and applied voltage. See graph below for the appropriate adjustment factor.*	
Capacitance change by temperature	For capacitance value ≤ 300 µF +12 % max. (at +125 °C) +10 % max. (at +85 °C) -10 % max. (at -55 °C)	For capacitance value > 300 µF +20 % max. (at +125 °C) +15 % max. (at +85 °C) -15 % max. (at -55 °C)
Reverse voltage	Capacitors are capable of withstanding peak voltages in the reverse direction equal to: 10 % of the DC rating at +25 °C 5 % of the DC rating at +85 °C 1 % of the DC rating at +125 °C Vishay does not recommend intentional or repetitive application of reverse voltage.	
Ripple current	For maximum ripple current values (at 25 °C) refer to relevant datasheet. If capacitors are to be used at temperatures above +25 °C, the permissible RMS ripple current (or voltage) shall be calculated using the derating factors: 1.0 at +25 °C 0.9 at +85 °C 0.4 at +125 °C	

Maximum operating and surge voltages vs. temperature	+85 °C		+125 °C	
	RATED VOLTAGE (V)	SURGE VOLTAGE (V)	CATEGORY VOLTAGE (V)	SURGE VOLTAGE (V)
	2.0	2.7	1.3	1.7
	4.0	5.2	2.7	3.4
	6.3	8.0	4.0	5.0
	10	13	7.0	8.0
	15 / 16	20	10	12
	20	26	13	16
	25	32	17	20
	35	46	23	28
	40	52	26	31
	50	65	33	40
	50 (1)	60	33	40
	63 (2)	75	42	50
	75 (2)	75	50	50

Recommended voltage derating guidelines (below 85 °C)	VOLTAGE RAIL (V)	CAPACITOR VOLTAGE RATING (V)
	≤ 3.3	6.3
	5	10
	10	20
	12	25
	15	35
	24	50 or series configuration
	28	63 or series configuration
	≥ 32	75 or series configuration

Notes

- All information presented in this document reflects typical performance characteristics
- For more information about recommended voltage derating see: www.vishay.com/doc?40246

(1) Capacitance value 15 µF and higher

(2) For 597D only

For technical questions, contact: tantalum@vishay.com

THIS DOCUMENT IS SUBJECT TO CHANGE WITHOUT NOTICE. THE PRODUCTS DESCRIBED HEREIN AND THIS DOCUMENT ARE SUBJECT TO SPECIFIC DISCLAIMERS, SET FORTH AT www.vishay.com/doc?91000

TYPICAL LEAKAGE CURRENT TEMPERATURE FACTOR

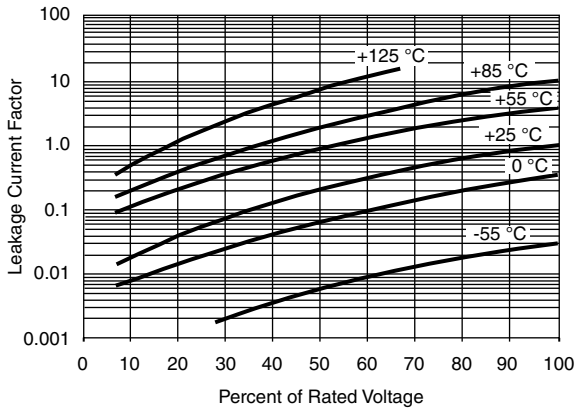

Notes

- **At +25 °C**, the leakage current shall not exceed the value listed in the Standard Ratings table
- **At +85 °C**, the leakage current shall not exceed 10 times the value listed in the Standard Ratings table
- **At +125 °C**, the leakage current shall not exceed 12 times the value listed in the Standard Ratings table

ENVIRONMENTAL PERFORMANCE CHARACTERISTICS

ITEM	CONDITION	POST TEST PERFORMANCE	
Surge voltage	Post application of surge voltage (as specified in the table above) in series with a 33 Ω resistor at the rate of 30 s ON, 30 s OFF, for 1000 successive test cycles at 85 °C MIL-PRF-55365	Capacitance change Dissipation factor Leakage current	Within ± 10 % of initial value Initial specified limit Initial specified limit
Life test at +85 °C	2000 h application of rated voltage at 85 °C MIL-STD-202, method 108	Capacitance change Dissipation factor Leakage current	Within ± 10 % of initial value Initial specified limit Shall not exceed 125 % of initial limit
Life test at +125 °C	1000 h application 2/3 of rated voltage at 125 °C MIL-STD-202, method 108	Capacitance change: Cap. ≤ 600 µF Cap. > 600 µF Dissipation factor Leakage current	 Within ± 10 % of initial value Within ± 20 % of initial value Initial specified limit Shall not exceed 125 % of initial limit
Humidity test	At 40 °C / 90 % RH, 1000 h, no voltage applied MIL-STD-202, method 103	Capacitance change: Cap. ≤ 600 µF Cap. > 600 µF Dissipation factor Leakage current	 Within ± 10 % of initial value Within ± 20 % of initial value Not to exceed 150 % of initial limit Shall not exceed 200 % of initial limit
Moisture resistance	MIL-STD-202, method 106, 20 cycles	Capacitance change: Cap. ≤ 600 µF Cap. > 600 µF Dissipation factor Leakage current	 Within ± 15 % of initial value Within ± 20 % of initial value Shall not exceed 150 % of initial limit Shall not exceed 200 % of initial limit
Thermal shock	At -55 °C / +125 °C, for 5 cycles, 30 min at each temperature MIL-STD-202, method 107	Capacitance change: Cap. ≤ 600 µF Cap. > 600 µF Dissipation factor Leakage current	 Within ± 10 % of initial value Within ± 20 % of initial value Initial specified limit Initial specified limit

For technical questions, contact: tantalum@vishay.com

THIS DOCUMENT IS SUBJECT TO CHANGE WITHOUT NOTICE. THE PRODUCTS DESCRIBED HEREIN AND THIS DOCUMENT ARE SUBJECT TO SPECIFIC DISCLAIMERS, SET FORTH AT www.vishay.com/doc?91000

MECHANICAL PERFORMANCE CHARACTERISTICS		
ITEM	**CONDITION**	**POST TEST PERFORMANCE**
Terminal strength / Shear force test	Apply a pressure load of 5 N for 10 s ± 1 s horizontally to the center of capacitor side body AEC-Q200-006	Capacitance change: Within ± 10 % of initial value Dissipation factor: Initial specified limit Leakage current: Initial specified limit There shall be no mechanical or visual damage to capacitors post-conditioning.
Vibration	MIL-STD-202, method 204, condition D, 10 Hz to 2000 Hz, 20 *g* peak, 8 h, at rated voltage	Electrical measurements are not applicable, since the same parts are used for shock (specified pulse) test. There shall be no mechanical or visual damage to capacitors post-conditioning.
Shock (specified pulse)	MIL-STD-202, method 213, condition I, 100 *g* peak	Capacitance change: Cap. ≤ 600 µF: Within ± 10 % of initial value Cap. > 600 µF: Within ± 20 % of initial value Dissipation factor: Initial specified limit Leakage current: Initial specified limit There shall be no mechanical or visual damage to capacitors post-conditioning.
Resistance to solder heat	MIL-STD-202, method 210, condition J (SnPb terminations) and K (lead (Pb)-free terminations), one heat cycle	Capacitance change: Within ± 10 % of initial value Dissipation factor: Initial specified limit Leakage current: Initial specified limit
Solderability	EIA / IPC / JEDEC J-STD-002 Test B (SnPb) and B1 (lead (Pb)-free). Preconditioning per category C. Capacitors with SnPb and lead (Pb)-free terminations are backward and forward compatible. Does not apply to gold terminations.	Solder coating of all capacitors shall meet specified requirements. There shall be no mechanical or visual damage to capacitors post-conditioning.
Flammability	Encapsulation materials meet UL 94 V-0 with an oxygen index of 32 %	

For technical questions, contact: tantalum@vishay.com

THIS DOCUMENT IS SUBJECT TO CHANGE WITHOUT NOTICE. THE PRODUCTS DESCRIBED HEREIN AND THIS DOCUMENT ARE SUBJECT TO SPECIFIC DISCLAIMERS, SET FORTH AT www.vishay.com/doc?91000

Disclaimer

ALL PRODUCT, PRODUCT SPECIFICATIONS AND DATA ARE SUBJECT TO CHANGE WITHOUT NOTICE TO IMPROVE RELIABILITY, FUNCTION OR DESIGN OR OTHERWISE.

Vishay Intertechnology, Inc., its affiliates, agents, and employees, and all persons acting on its or their behalf (collectively, “Vishay”), disclaim any and all liability for any errors, inaccuracies or incompleteness contained in any datasheet or in any other disclosure relating to any product.

Vishay makes no warranty, representation or guarantee regarding the suitability of the products for any particular purpose or the continuing production of any product. To the maximum extent permitted by applicable law, Vishay disclaims (i) any and all liability arising out of the application or use of any product, (ii) any and all liability, including without limitation special, consequential or incidental damages, and (iii) any and all implied warranties, including warranties of fitness for particular purpose, non-infringement and merchantability.

Statements regarding the suitability of products for certain types of applications are based on Vishay's knowledge of typical requirements that are often placed on Vishay products in generic applications. Such statements are not binding statements about the suitability of products for a particular application. It is the customer's responsibility to validate that a particular product with the properties described in the product specification is suitable for use in a particular application. Parameters provided in datasheets and / or specifications may vary in different applications and performance may vary over time. All operating parameters, including typical parameters, must be validated for each customer application by the customer's technical experts. Product specifications do not expand or otherwise modify Vishay's terms and conditions of purchase, including but not limited to the warranty expressed therein.

Hyperlinks included in this datasheet may direct users to third-party websites. These links are provided as a convenience and for informational purposes only. Inclusion of these hyperlinks does not constitute an endorsement or an approval by Vishay of any of the products, services or opinions of the corporation, organization or individual associated with the third-party website. Vishay disclaims any and all liability and bears no responsibility for the accuracy, legality or content of the third-party website or for that of subsequent links.

Vishay products are not designed for use in life-saving or life-sustaining applications or any application in which the failure of the Vishay product could result in personal injury or death unless specifically qualified in writing by Vishay. Customers using or selling Vishay products not expressly indicated for use in such applications do so at their own risk. Please contact authorized Vishay personnel to obtain written terms and conditions regarding products designed for such applications.

No license, express or implied, by estoppel or otherwise, to any intellectual property rights is granted by this document or by any conduct of Vishay. Product names and markings noted herein may be trademarks of their respective owners.

© 2025 VISHAY INTERTECHNOLOGY, INC. ALL RIGHTS RESERVED

THIS DOCUMENT IS SUBJECT TO CHANGE WITHOUT NOTICE. THE PRODUCTS DESCRIBED HEREIN AND THIS DOCUMENT ARE SUBJECT TO SPECIFIC DISCLAIMERS, SET FORTH AT www.vishay.com/doc?91000