IR Receiver Modules for Remote Control Systems

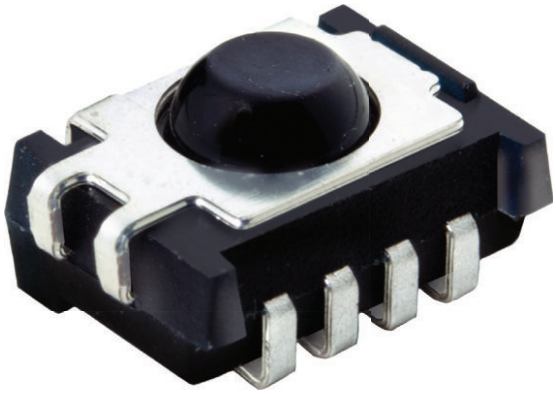

DESCRIPTION

This IR receiver series is optimized for short burst remote control systems in different environments. The customer can chose between different IC settings (AGC variants), to find the optimum solution for his application. The higher the AGC, the better noise is suppressed, but the lower the code compatibility.

The devices contain a PIN diode and a preamplifier assembled on a lead frame. The epoxy package contains an IR filter. The demodulated output signal can be directly connected to a microprocessor for decoding. These components have not been qualified to automotive specifications.

FEATURES

- Individual IC settings to reach maximum performance
- Immunity against noise (lamps, LCD TV, Wi-Fi)
- Low supply current
- Photo detector and preamplifier in one package
- Supply voltage: 2.0 V to 5.5 V
- Material categorization: for definitions of compliance please see www.vishay.com/doc?99912

Pb-free

e4

RoHS COMPLIANT

HALOGEN FREE

GREEN (5-2008)

LINKS TO ADDITIONAL RESOURCES

Product Page

Marking

DESIGN SUPPORT TOOLS

- 3D models
- Window size calculator

BLOCK DIAGRAM

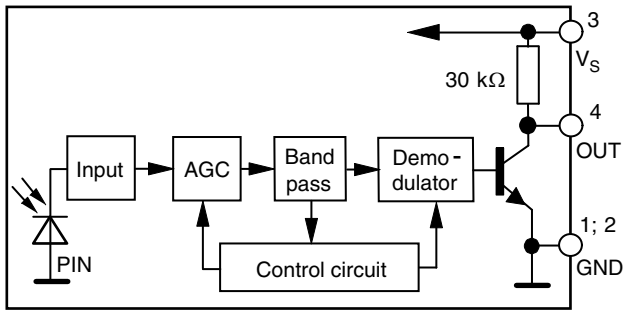

16839

THIS DOCUMENT IS SUBJECT TO CHANGE WITHOUT NOTICE. THE PRODUCTS DESCRIBED HEREIN AND THIS DOCUMENT ARE SUBJECT TO SPECIFIC DISCLAIMERS, SET FORTH AT www.vishay.com/doc?91000

MECHANICAL DATA

Pinning

1 = GND, 2 = N.C., 3 = V_S, 4 = OUT

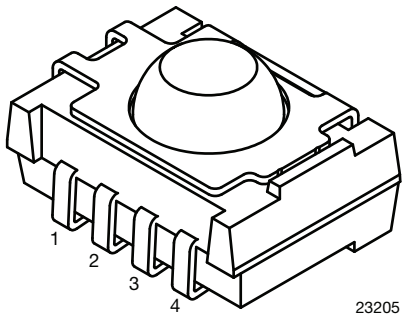

ORDERING CODE

Taping:

TSOP36...TT - top view taped, 1190 pcs/reel

TSOP36...TR - side view taped, 1120 pcs/reel

APPLICATION CIRCUIT

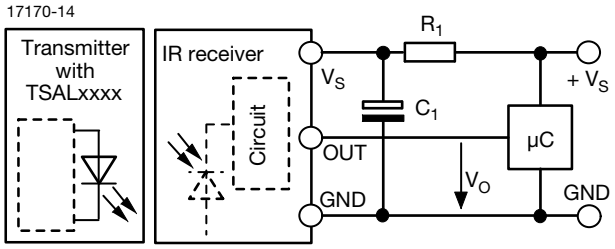

R_1 and C_1 recommended in case there are strong ripple or spikes on the supply line.

PARTS TABLE

AGC		LEGACY, FOR SHORT BURST REMOTE CONTROLS (AGC1)	NOISY ENVIRONMENTS AND SHORT BURSTS (AGC3)	VERY NOISY ENVIRONMENTS AND SHORT BURSTS (AGC5)
Carrier frequency	30 kHz	TSOP36130	TSOP36330	TSOP36530
	33 kHz	TSOP36133	TSOP36333	TSOP36533
	36 kHz	TSOP36136	TSOP36336 (1)(2)	TSOP36536
	38 kHz	TSOP36138	TSOP36338 (3)(4)(5)	TSOP36538
	40 kHz	TSOP36140	TSOP36340	TSOP36540
	56 kHz	TSOP36156	TSOP36356	TSOP36556
Package		Panhead		
Pinning		1 = GND, 2 = N.C., 3 = V_S, 4 = OUT		
Dimensions (mm)		7.5 W x 5.3 H x 4.0 D		
Mounting		SMD		
Application		Remote control		
Best choice for		(1) MCIR (2) RCMM (3) RECS-80 Code (4) r-map (5) XMP		
Special options		• Narrow optical filter: www.vishay.com/doc?81590 • Wide optical flter: www.vishay.com/doc?82726		

ABSOLUTE MAXIMUM RATINGS

PARAMETER	TEST CONDITION	SYMBOL	VALUE	UNIT
Supply voltage (pin 3)		V_S	-0.3 to +6	V
Supply current (pin 3)		I_S	3	mA
Output voltage (pin 4)		V_O	-0.3 to (V_S + 0.3)	V
Output current (pin 4)		I_O	5	mA
Junction temperature		T_j	100	°C
Storage temperature range		T_{stg}	-25 to +85	°C
Operating temperature range		T_{amb}	-25 to +85	°C
Power consumption	$T_{amb} \leq 85$ °C	P_{tot}	10	mW

Note

- Stresses beyond those listed under “Absolute Maximum Ratings” may cause permanent damage to the device. This is a stress rating only and functional operation of the device at these or any other conditions beyond those indicated in the operational sections of this specification is not implied. Exposure to absolute maximum rating conditions for extended periods may affect the device reliability.

THIS DOCUMENT IS SUBJECT TO CHANGE WITHOUT NOTICE. THE PRODUCTS DESCRIBED HEREIN AND THIS DOCUMENT ARE SUBJECT TO SPECIFIC DISCLAIMERS, SET FORTH AT www.vishay.com/doc?91000

ELECTRICAL AND OPTICAL CHARACTERISTICS (T_{amb} = 25 °C, unless otherwise specified)						
PARAMETER	**TEST CONDITION**	**SYMBOL**	**MIN.**	**TYP.**	**MAX.**	**UNIT**
Supply current	E_v = 0, V_S = 3.3 V	I_{SD}	0.25	0.35	0.45	mA
	E_v = 40 klx, sunlight	I_{SH}	-	0.45	-	mA
Supply voltage		V_S	2.0	-	5.5	V
Transmission distance	E_v = 0, test signal see Fig. 1, IR diode TSAL6200, I_F = 50 mA	d	-	26	-	m
Output voltage low	I_{OSL} = 0.5 mA, E_e = 0.7 mW/m², test signal see Fig. 1	V_{OSL}	-	-	100	mV
Minimum irradiance	Test signal: RC5 code	$E_{e\ min.}$	-	0.1	0.2	mW/m²
	Test signal: XMP code	$E_{e\ min.}$	-	0.12	0.25	mW/m²
Maximum irradiance	t_{pi} - 3/f_0 < t_{po} < t_{pi} + 3.5/f_0, test signal see Fig. 1	$E_{e\ max.}$	30	-	-	W/m²
Directivity	Angle of half transmission distance	$\varphi_{1/2}$	-	± 50	-	°

TYPICAL CHARACTERISTICS (T_{amb} = 25 °C, unless otherwise specified)

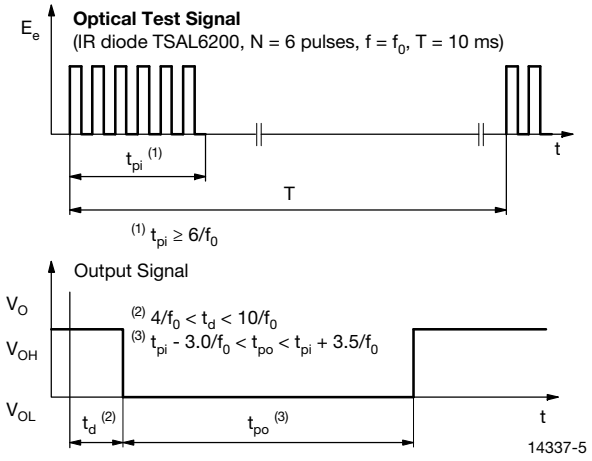

Fig. 1 - Output Function

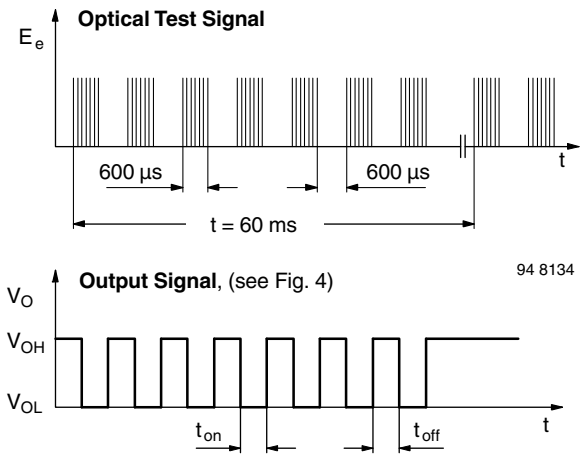

Fig. 3 - Output Function

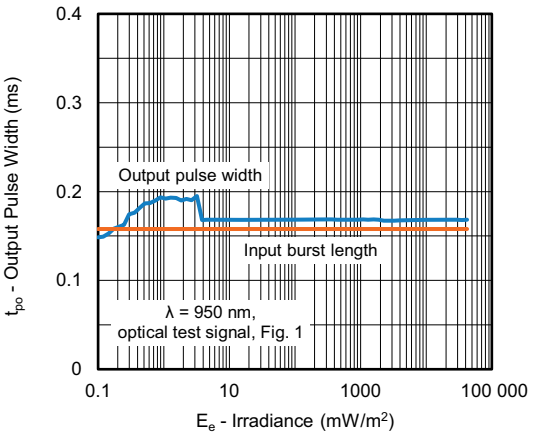

Fig. 2 - Pulse Length and Sensitivity in Dark Ambient

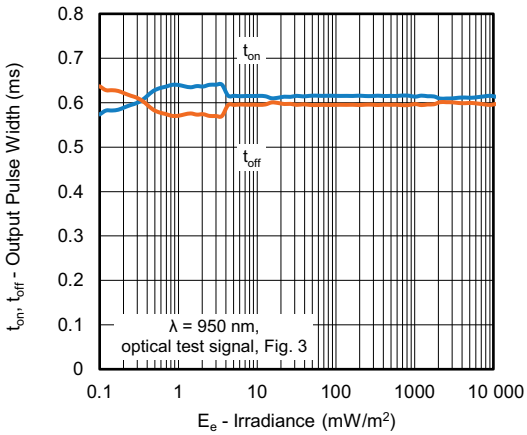

Fig. 4 - Output Pulse Diagram

THIS DOCUMENT IS SUBJECT TO CHANGE WITHOUT NOTICE. THE PRODUCTS DESCRIBED HEREIN AND THIS DOCUMENT ARE SUBJECT TO SPECIFIC DISCLAIMERS, SET FORTH AT www.vishay.com/doc?91000

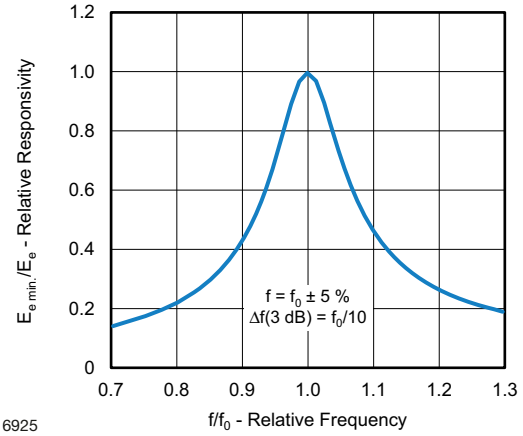

Fig. 5 - Frequency Dependence of Responsivity

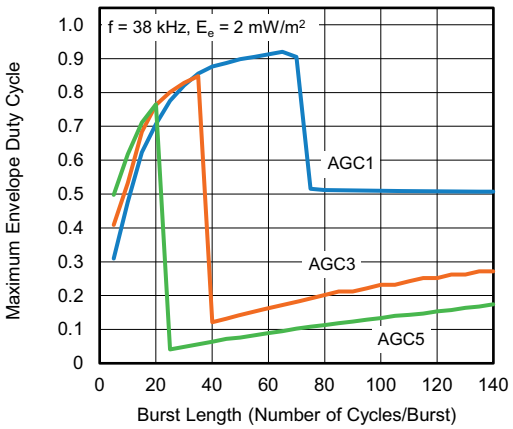

Fig. 8 - Maximum Envelope Duty Cycle vs. Burstlength

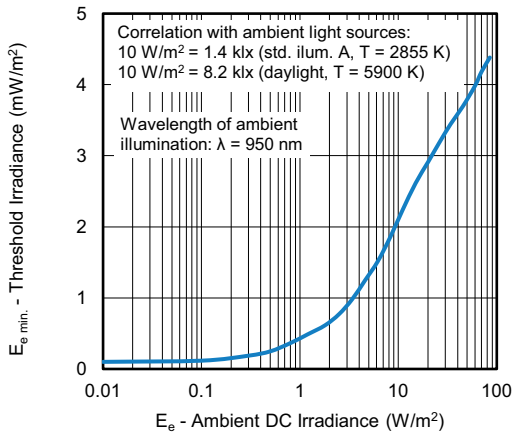

Fig. 6 - Sensitivity in Bright Ambient

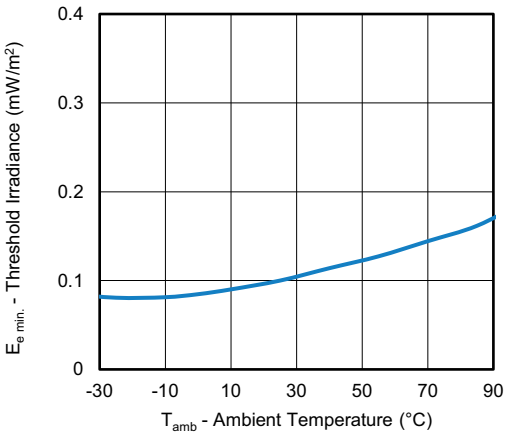

Fig. 9 - Sensitivity vs. Ambient Temperature

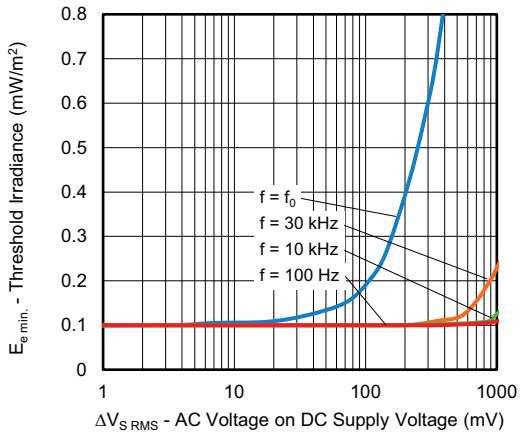

Fig. 7 - Sensitivity vs. Supply Voltage Disturbances

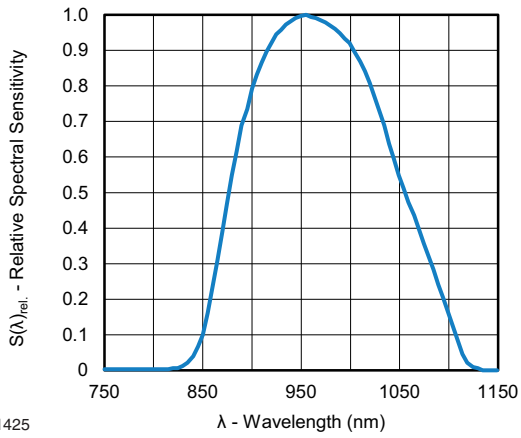

Fig. 10 - Relative Spectral Sensitivity vs. Wavelength

THIS DOCUMENT IS SUBJECT TO CHANGE WITHOUT NOTICE. THE PRODUCTS DESCRIBED HEREIN AND THIS DOCUMENT ARE SUBJECT TO SPECIFIC DISCLAIMERS, SET FORTH AT www.vishay.com/doc?91000

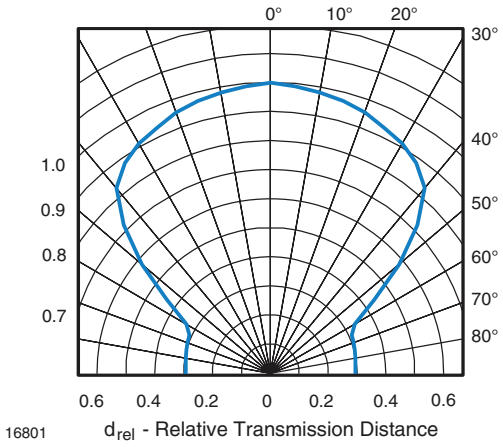

Fig. 11 - Directivity

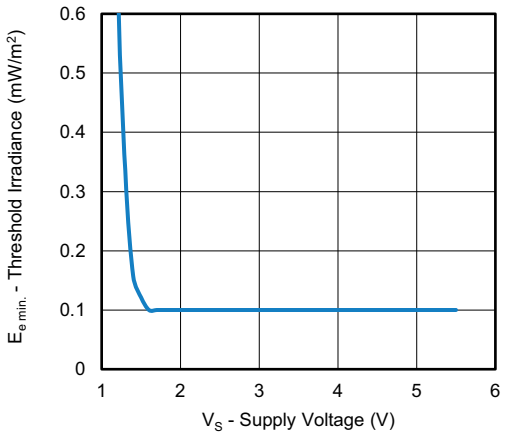

Fig. 12 - Sensitivity vs. Supply Voltage

THIS DOCUMENT IS SUBJECT TO CHANGE WITHOUT NOTICE. THE PRODUCTS DESCRIBED HEREIN AND THIS DOCUMENT ARE SUBJECT TO SPECIFIC DISCLAIMERS, SET FORTH AT www.vishay.com/doc?91000

SUITABLE DATA FORMAT

This series is designed to suppress spurious output pulses due to noise or disturbance signals. The devices can distinguish data signals from noise due to differences in frequency, burst length, and envelope duty cycle. The data signal should be close to the device's band-pass center frequency (e.g. 38 kHz) and fulfill the conditions in the table below.

When a data signal is applied to the product in the presence of a disturbance, the sensitivity of the receiver is automatically reduced by the AGC to insure that no spurious pulses are present at the receiver's output.

Some examples which are suppressed are:

- DC light (e.g. from tungsten bulbs sunlight)
- Continuous signals at any frequency
- Strongly or weakly modulated patterns from fluorescent lamps with electronic ballasts (see Fig. 13 or Fig. 14)

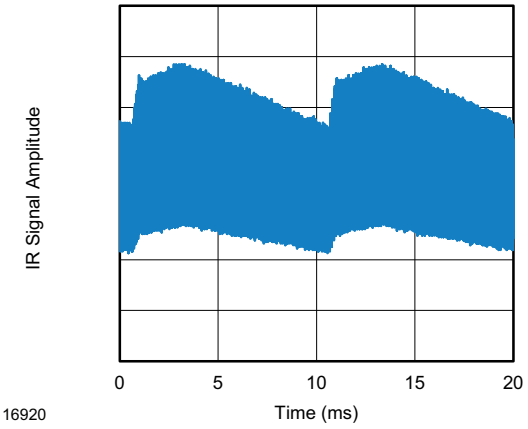

Fig. 13 - IR Signal from Fluorescent Lamp With Low Modulation

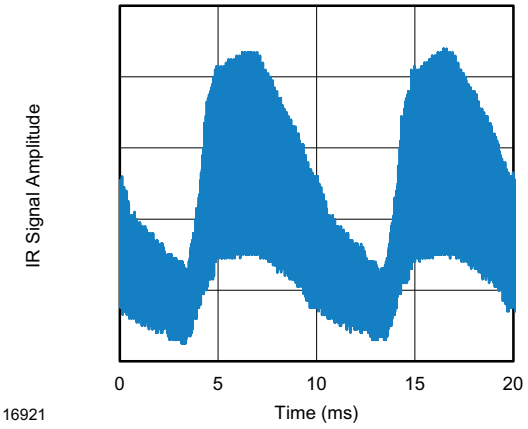

Fig. 14 - IR Signal from Fluorescent Lamp With High Modulation

	TSOP361..	TSOP363..	TSOP365..
Minimum burst length	6 cycles/burst	6 cycles/burst	6 cycles/burst
After each burst of length A gap time is required of	6 to 70 cycles ≥ 10 cycles	6 to 35 cycles ≥ 10 cycles	6 to 20 cycles ≥ 10 cycles
For bursts greater than a minimum gap time in the data stream is needed of	70 cycles > 2 x burst length	35 cycles > 9 x burst length	20 cycles > 25 x burst length
Maximum number of continuous short bursts/second	2000	2000	2000
MCIR code	Yes	Preferred	No
XMP code	Yes	Preferred	Yes
RECS-80 code	Yes	Preferred	Yes
RCMM code	Yes	Preferred	Yes
r-map code	Yes	Preferred	Yes
Suppression of interference from fluorescent lamps	Fig. 13	Fig. 13 and Fig. 14	Fig. 13 and Fig. 14

Notes

- For data formats with long bursts (more than 10 carrier cycles) please see the datasheet for TSOP362.., TSOP364..

THIS DOCUMENT IS SUBJECT TO CHANGE WITHOUT NOTICE. THE PRODUCTS DESCRIBED HEREIN AND THIS DOCUMENT ARE SUBJECT TO SPECIFIC DISCLAIMERS, SET FORTH AT www.vishay.com/doc?91000

PACKAGE DIMENSIONS in millimeters

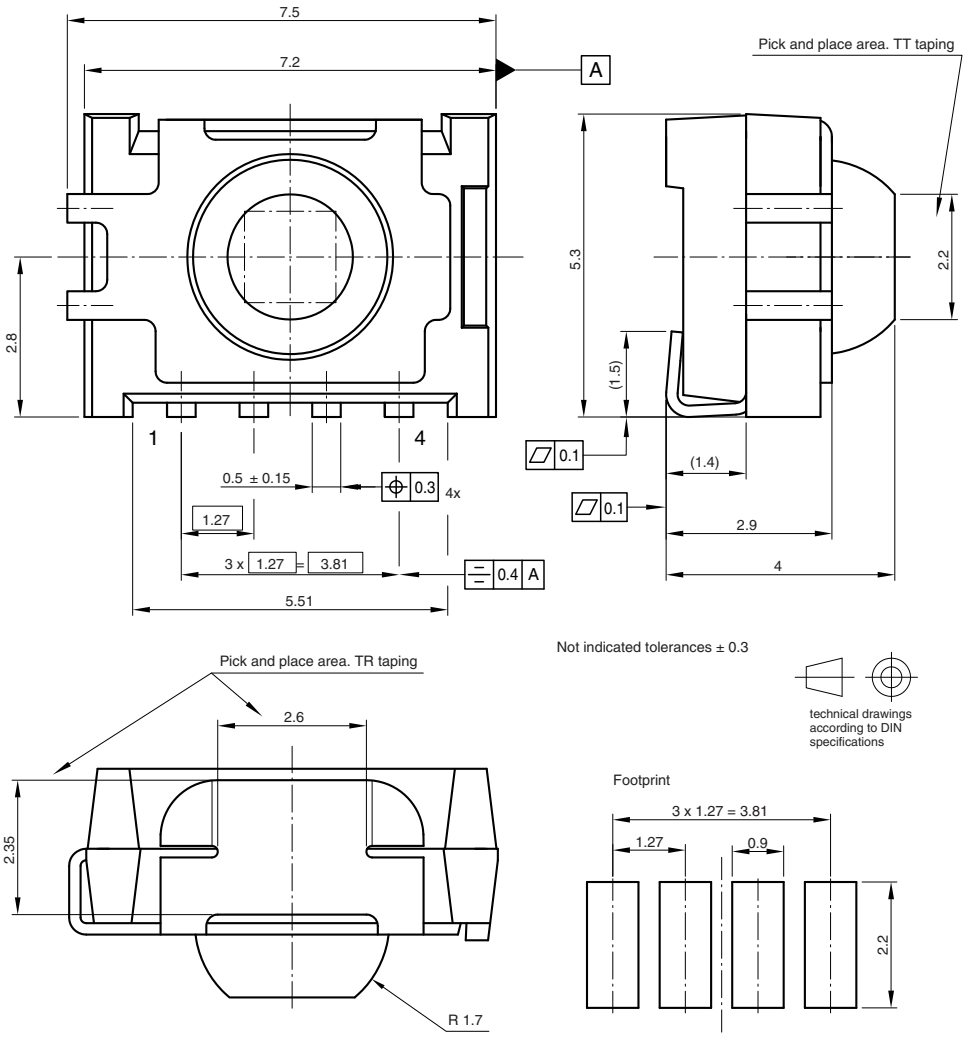

Drawing-No.: 6.544-5341.01-4
Issue: 8; 02.09.09
16776

ASSEMBLY INSTRUCTIONS

Reflow Soldering

- Reflow soldering must be done within 72 h while stored under a max. temperature of 30 °C, 60 % RH after opening the dry pack envelope
- Set the furnace temperatures for pre-heating and heating in accordance with the reflow temperature profile as shown in the diagram. Exercise extreme care to keep the maximum temperature below 260 °C. The temperature shown in the profile means the temperature at the device surface. Since there is a temperature difference between the component and the circuit board, it should be verified that the temperature of the device is accurately being measured
- Handling after reflow should be done only after the work surface has been cooled off

Manual Soldering

- Use a soldering iron of 25 W or less. Adjust the temperature of the soldering iron below 300 °C
- Finish soldering within 3 s
- Handle products only after the temperature has cooled off.

THIS DOCUMENT IS SUBJECT TO CHANGE WITHOUT NOTICE. THE PRODUCTS DESCRIBED HEREIN AND THIS DOCUMENT ARE SUBJECT TO SPECIFIC DISCLAIMERS, SET FORTH AT www.vishay.com/doc?91000

VISHAY LEAD (Pb)-FREE REFLOW SOLDER PROFILE

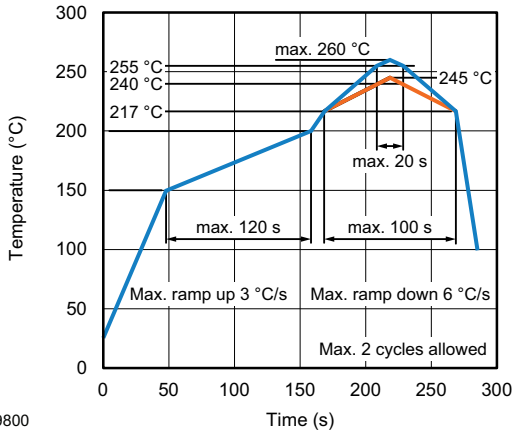

TAPING VERSION TSOP..TT DIMENSIONS in millimeters

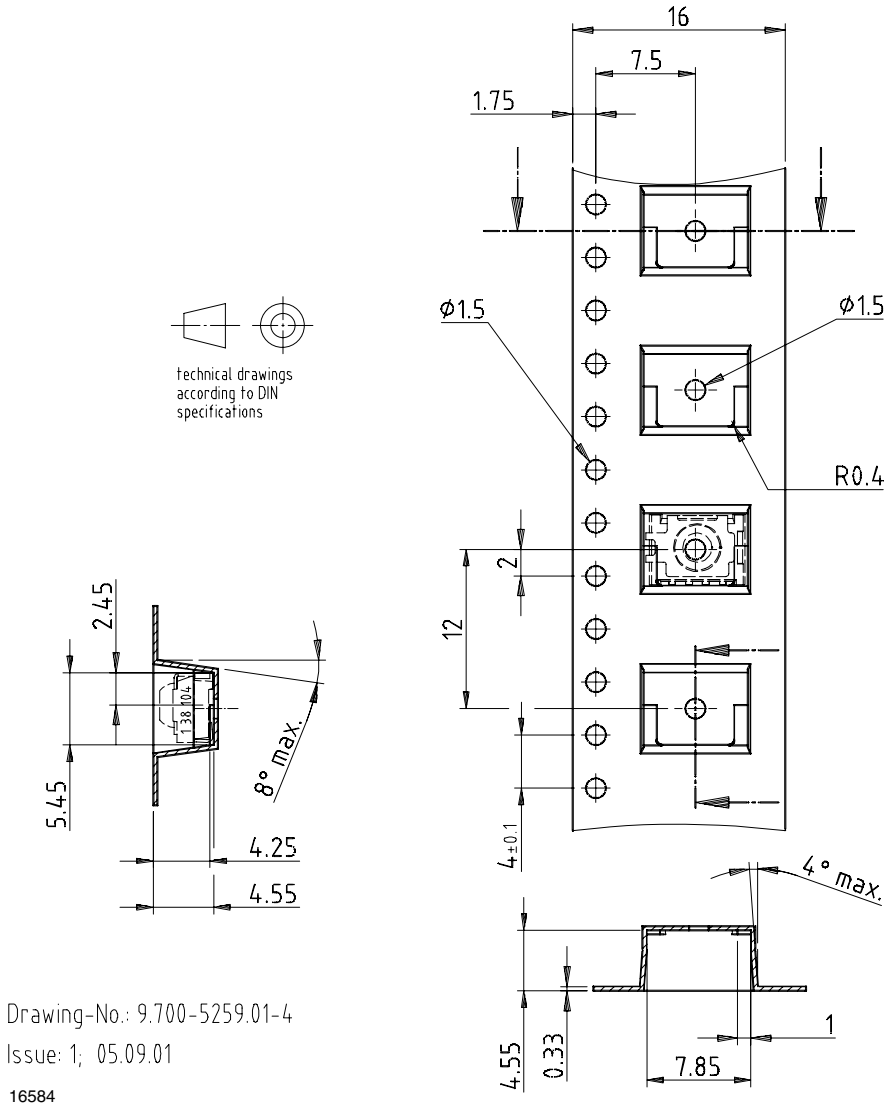

THIS DOCUMENT IS SUBJECT TO CHANGE WITHOUT NOTICE. THE PRODUCTS DESCRIBED HEREIN AND THIS DOCUMENT ARE SUBJECT TO SPECIFIC DISCLAIMERS, SET FORTH AT www.vishay.com/doc?91000

TAPING VERSION TSOP..TR DIMENSIONS in millimeters

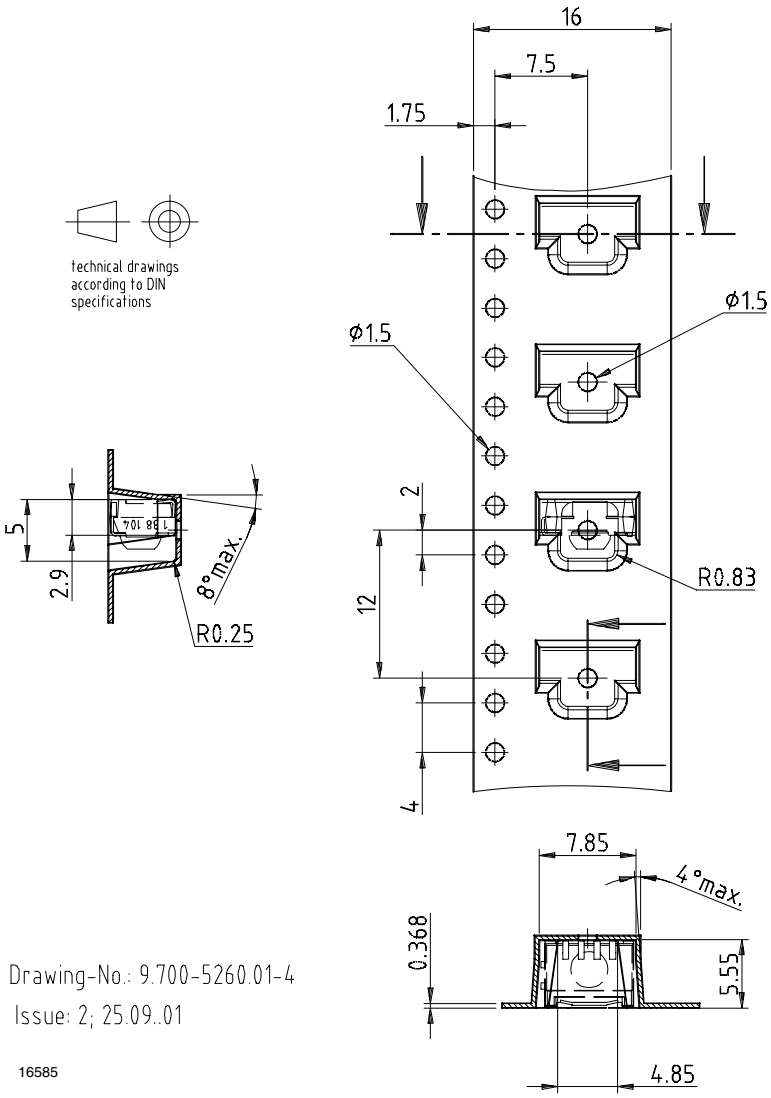

THIS DOCUMENT IS SUBJECT TO CHANGE WITHOUT NOTICE. THE PRODUCTS DESCRIBED HEREIN AND THIS DOCUMENT ARE SUBJECT TO SPECIFIC DISCLAIMERS, SET FORTH AT www.vishay.com/doc?91000

REEL DIMENSIONS in millimeters

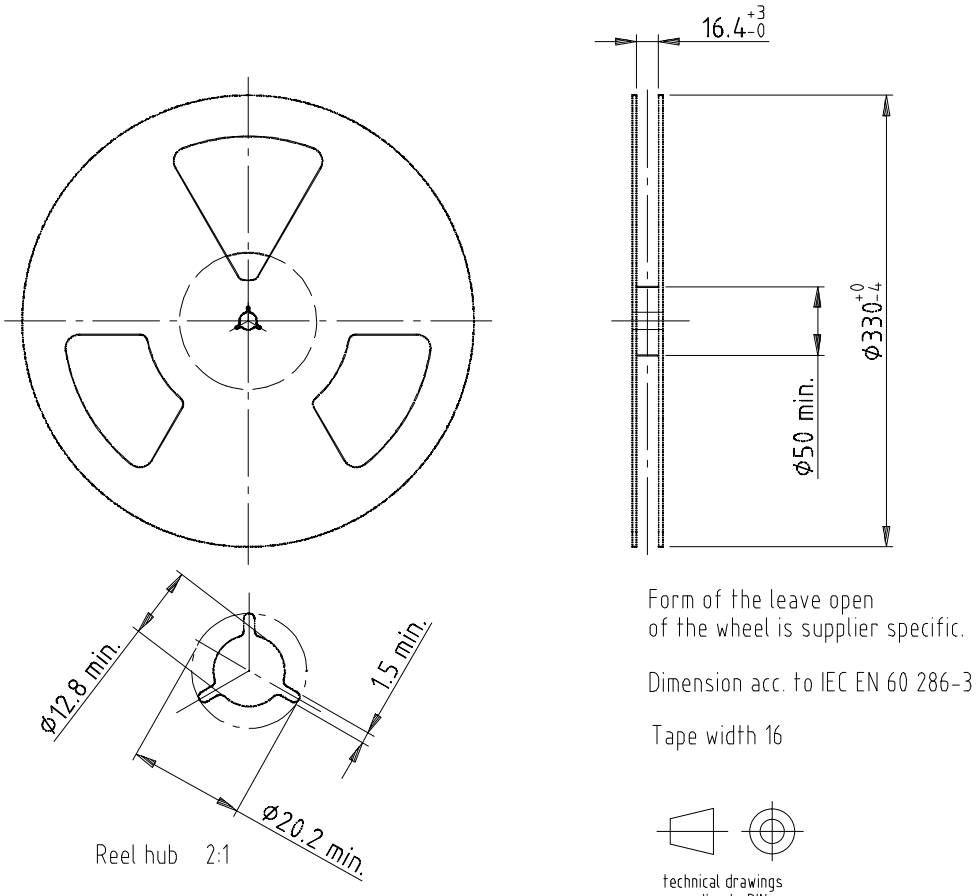

Form of the leave open
of the wheel is supplier specific.

Dimension acc. to IEC EN 60 286-3

Tape width 16

technical drawings
according to DIN
specifications

Drawing-No.: 9.800-5052.V2-4
Issue: 1; 07.05.02

16734

LEADER AND TRAILER DIMENSIONS in millimeters

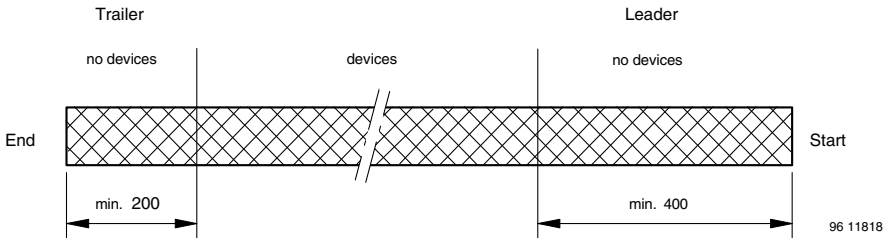

THIS DOCUMENT IS SUBJECT TO CHANGE WITHOUT NOTICE. THE PRODUCTS DESCRIBED HEREIN AND THIS DOCUMENT ARE SUBJECT TO SPECIFIC DISCLAIMERS, SET FORTH AT www.vishay.com/doc?91000

OUTER PACKAGING

The sealed reel is packed into a pizza box.

CARTON BOX DIMENSIONS in millimeters

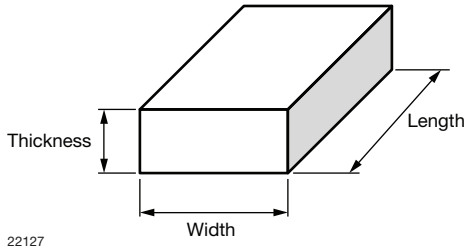

	THICKNESS	WIDTH	LENGTH
Pizza box (SMD and Heimdall) (taping in reels)	50	340	340

COVER TAPE PEEL STRENGTH

According to DIN EN 60286-3

0.1 N to 1.3 N

300 mm/min. ± 10 mm/min.

165° to 180° peel angle

LABEL

Standard bar code labels for finished goods

The standard bar code labels are product labels and used for identification of goods. The finished goods are packed in final packing area. The standard packing units are labeled with standard bar code labels before transported as finished goods to warehouses. The labels are on each packing unit and contain Vishay Semiconductor GmbH specific data.

VISHAY SEMICONDUCTOR GmbH STANDARD BAR CODE PRODUCT LABEL (finished goods)

PLAIN WRITTING	ABBREVIATION	LENGTH
Item-description	-	18
Item-number	INO	8
Selection-code	SEL	3
LOT-/serial-number	BATCH	10
Data-code	COD	3 (YWW)
Plant-code	PTC	2
Quantity	QTY	8
Accepted by	ACC	-
Packed by	PCK	-
Mixed code indicator	MIXED CODE	-
Origin	xxxxxxx+	Company logo
LONG BAR CODE TOP	**TYPE**	**LENGTH**
Item-number	N	8
Plant-code	N	2
Sequence-number	X	3
Quantity	N	8
Total length	-	21
SHORT BAR CODE BOTTOM	**TYPE**	**LENGTH**
Selection-code	X	3
Data-code	N	3
Batch-number	X	10
Filter	-	1
Total length	-	17

THIS DOCUMENT IS SUBJECT TO CHANGE WITHOUT NOTICE. THE PRODUCTS DESCRIBED HEREIN AND THIS DOCUMENT ARE SUBJECT TO SPECIFIC DISCLAIMERS, SET FORTH AT www.vishay.com/doc?91000

DRY PACKING

The reel is packed in an anti-humidity bag to protect the devices from absorbing moisture during transportation and storage.

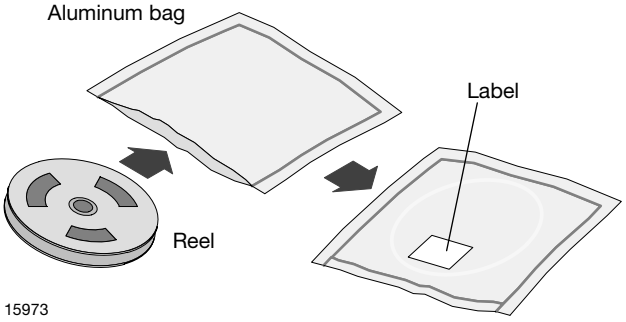

FINAL PACKING

The sealed reel is packed into a cardboard box.

RECOMMENDED METHOD OF STORAGE

Dry box storage is recommended as soon as the aluminum bag has been opened to prevent moisture absorption. The following conditions should be observed, if dry boxes are not available:

- Storage temperature 10 °C to 30 °C
- Storage humidity ≤ 60 % RH max.

After more than 72 h under these conditions moisture content will be too high for reflow soldering.

In case of moisture absorption, the devices will recover to the former condition by drying under the following condition:

192 h at 40 °C + 5 °C / - 0 °C and < 5 % RH (dry air / nitrogen) or

96 h at 60 °C + 5 °C and < 5 % RH for all device containers or

24 h at 125 °C + 5 °C not suitable for reels or tubes.

An EIA JEDEC® standard J-STD-020 level 4 label is included on all dry bags.

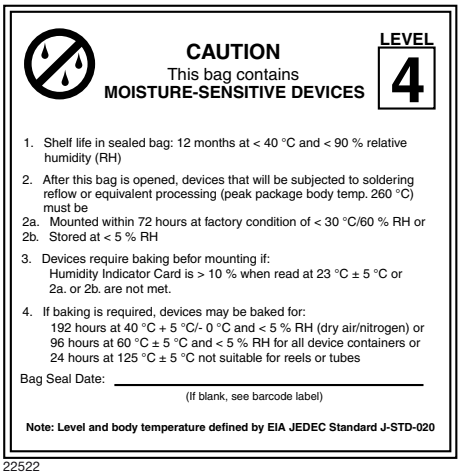

EIA JEDEC standard J-STD-020 level 4 label is included on all dry bags

ESD PRECAUTION

Proper storage and handling procedures should be followed to prevent ESD damage to the devices especially when they are removed from the antistatic shielding bag. Electrostatic sensitive devices warning labels are on the packaging.

VISHAY SEMICONDUCTORS STANDARD BAR CODE LABELS

The Vishay Semiconductors standard bar code labels are printed at final packing areas. The labels are on each packing unit and contain Vishay Semiconductors specific data.

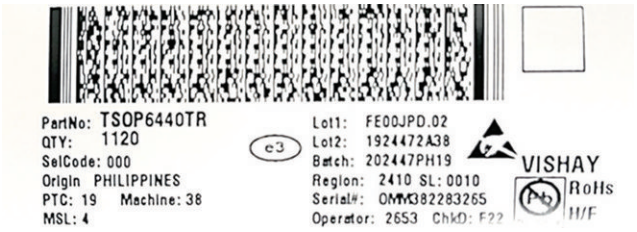

THIS DOCUMENT IS SUBJECT TO CHANGE WITHOUT NOTICE. THE PRODUCTS DESCRIBED HEREIN AND THIS DOCUMENT ARE SUBJECT TO SPECIFIC DISCLAIMERS, SET FORTH AT www.vishay.com/doc?91000

Disclaimer

ALL PRODUCT, PRODUCT SPECIFICATIONS AND DATA ARE SUBJECT TO CHANGE WITHOUT NOTICE TO IMPROVE RELIABILITY, FUNCTION OR DESIGN OR OTHERWISE.

Vishay Intertechnology, Inc., its affiliates, agents, and employees, and all persons acting on its or their behalf (collectively, “Vishay”), disclaim any and all liability for any errors, inaccuracies or incompleteness contained in any datasheet or in any other disclosure relating to any product.

Vishay makes no warranty, representation or guarantee regarding the suitability of the products for any particular purpose or the continuing production of any product. To the maximum extent permitted by applicable law, Vishay disclaims (i) any and all liability arising out of the application or use of any product, (ii) any and all liability, including without limitation special, consequential or incidental damages, and (iii) any and all implied warranties, including warranties of fitness for particular purpose, non-infringement and merchantability.

Statements regarding the suitability of products for certain types of applications are based on Vishay's knowledge of typical requirements that are often placed on Vishay products in generic applications. Such statements are not binding statements about the suitability of products for a particular application. It is the customer's responsibility to validate that a particular product with the properties described in the product specification is suitable for use in a particular application. Parameters provided in datasheets and / or specifications may vary in different applications and performance may vary over time. All operating parameters, including typical parameters, must be validated for each customer application by the customer's technical experts. Product specifications do not expand or otherwise modify Vishay's terms and conditions of purchase, including but not limited to the warranty expressed therein.

Hyperlinks included in this datasheet may direct users to third-party websites. These links are provided as a convenience and for informational purposes only. Inclusion of these hyperlinks does not constitute an endorsement or an approval by Vishay of any of the products, services or opinions of the corporation, organization or individual associated with the third-party website. Vishay disclaims any and all liability and bears no responsibility for the accuracy, legality or content of the third-party website or for that of subsequent links.

Vishay products are not designed for use in life-saving or life-sustaining applications or any application in which the failure of the Vishay product could result in personal injury or death unless specifically qualified in writing by Vishay. Customers using or selling Vishay products not expressly indicated for use in such applications do so at their own risk. Please contact authorized Vishay personnel to obtain written terms and conditions regarding products designed for such applications.

No license, express or implied, by estoppel or otherwise, to any intellectual property rights is granted by this document or by any conduct of Vishay. Product names and markings noted herein may be trademarks of their respective owners.

© 2024 VISHAY INTERTECHNOLOGY, INC. ALL RIGHTS RESERVED

THIS DOCUMENT IS SUBJECT TO CHANGE WITHOUT NOTICE. THE PRODUCTS DESCRIBED HEREIN AND THIS DOCUMENT ARE SUBJECT TO SPECIFIC DISCLAIMERS, SET FORTH AT www.vishay.com/doc?91000