IR Sensor Module for Remote Control Systems

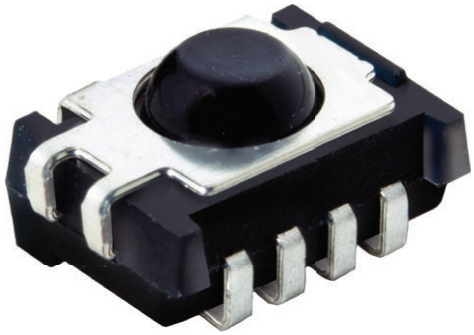

DESCRIPTION

The TSMP96000 is a miniaturized sensor for receiving various kinds of modulated IR signals. A PIN diode and preamplifier are assembled on a lead frame, the epoxy package is designed as an IR filter. The modulated output signal, carrier out, can be used for code learning applications.

This component has not been qualified according to automotive specifications.

FEATURES

- Photo detector and preamplifier in one package
- AC coupled response from 30 kHz to 60 kHz, all data formats
- Improved shielding against electrical field disturbance
- TTL and CMOS compatibility
- Output active low
- Supply voltage 2.0 V to 5.5 V
- Carrier out signal for code learning functions
- Material categorization: for definitions of compliance please see www.vishay.com/doc?99912

Pb-free

e3

RoHS COMPLIANT

HALOGEN FREE GREEN (5-2008)

LINKS TO ADDITIONAL RESOURCES

Product Page

Marking

APPLICATIONS

- Infrared receiver for code learning

DESIGN SUPPORT TOOLS

- 3D models
- Window size calculator

BLOCK DIAGRAM

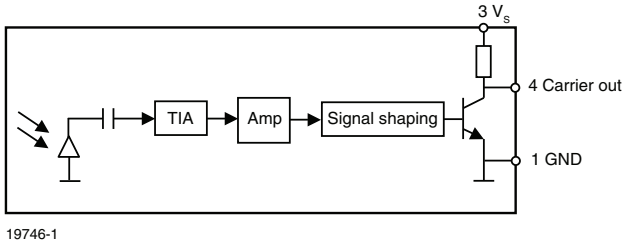

19746-1

THIS DOCUMENT IS SUBJECT TO CHANGE WITHOUT NOTICE. THE PRODUCTS DESCRIBED HEREIN AND THIS DOCUMENT ARE SUBJECT TO SPECIFIC DISCLAIMERS, SET FORTH AT www.vishay.com/doc?91000

MECHANICAL DATA

Pinning:

1 = GND, 2 = N.C., 3 = V_S, 4 = OUT

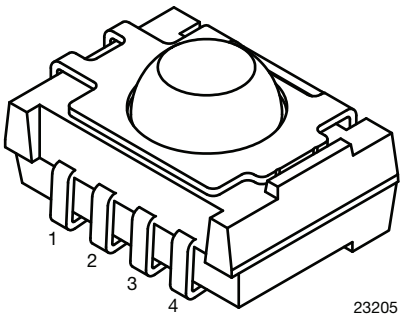

ORDERING CODE

Taping:

TSMP96000TT - top view taped, 1190 pcs/reel

TSMP96000TR - side view taped, 1120 pcs/reel

APPLICATION CIRCUIT

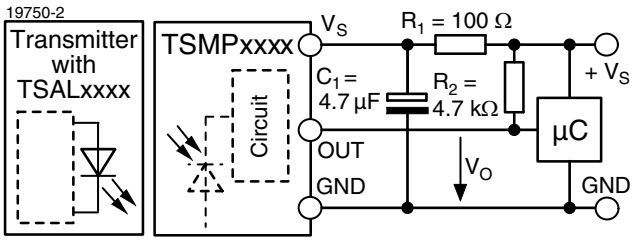

R_1 + C_1 recommended to suppress power supply disturbances.
R_2 recommended to get faster slopes and a correct high level of the output pulses.

PARTS TABLE		
Carrier frequency	30 kHz to 60 kHz	TSMP96000
Package		Panhead
Pinning		1 = GND, 2 = N.C., 3 = V_S, 4 = OUT
Dimensions (mm)		7.5 W x 5.3 H x 4.0 D
Mounting		SMD
Application		Code learning
Special options		• Narrow optical filter: www.vishay.com/doc?81590 • Wide optical flter: www.vishay.com/doc?82726

ABSOLUTE MAXIMUM RATINGS (T_{amb} = 25 °C, unless otherwise specified)

PARAMETER	TEST CONDITION	SYMBOL	VALUE	UNIT
Supply voltage (pin 3)		V_S	-0.3 to +6	V
Output voltage (pin 4)		V_O	-0.3 to (V_S + 0.3)	V
Output current (pin 4)		I_O	5	mA
Junction temperature		T_j	100	°C
Storage temperature range		T_{stg}	-25 to +85	°C
Operating temperature range		T_{amb}	-25 to +85	°C

Note

- Stresses beyond those listed under “Absolute Maximum Ratings” may cause permanent damage to the device. This is a stress rating only and functional operation of the device at these or any other conditions beyond those indicated in the operational sections of this specification is not implied. Exposure to absolute maximum rating conditions for extended periods may affect the device reliability

THIS DOCUMENT IS SUBJECT TO CHANGE WITHOUT NOTICE. THE PRODUCTS DESCRIBED HEREIN AND THIS DOCUMENT ARE SUBJECT TO SPECIFIC DISCLAIMERS, SET FORTH AT www.vishay.com/doc?91000

ELECTRICAL AND OPTICAL CHARACTERISTICS CARRIER OUT (T_{amb} = 25 °C, unless otherwise specified, V_S = 3 V)						
PARAMETER	**TEST CONDITION**	**SYMBOL**	**MIN.**	**TYP.**	**MAX.**	**UNIT**
Supply current (pin 3)	V_S = 3.3 V, E_v = 0	I_{SD}	0.25	0.35	0.45	mA
Supply voltage		V_S	2.0	-	5.5	V
Transmission distance	E_v = 0, test signal see Fig. 1, IR diode TSAL6200, I_F = 50 mA	d	-	1.8	-	m
Output voltage low (pin 4)	I_{OSL} = 0.5 mA, test signal see Fig. 1	V_{OSL}	-	-	250	mV
Minimum irradiance	V_S = 3 V, (30 kHz to 60 kHz)	$E_{e\ min.}$	-	12	25	mW/m²
Maximum irradiance	Test signal see Fig. 1, (30 kHz to 60 kHz)	$E_{e\ max.}$	30	-	-	W/m²
Directivity	Angle of half transmission distance	$\varphi_{1/2}$	-	± 50	-	°
Output accuracy	f_C = 30 kHz to 60 kHz, E_e = 25 mW/m² to 30 W/m², test signal see Fig. 1, BER ≤ 2%	N carrier pulses	Input burst length -1 cycle	Input burst length	Input burst length +1 cycle	counts

TYPICAL CHARACTERISTICS (T_{amb} = 25 °C, unless otherwise specified)

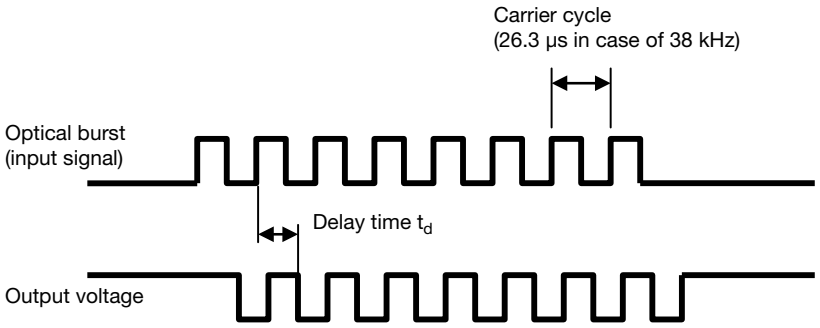

Fig. 1 - Testsignal

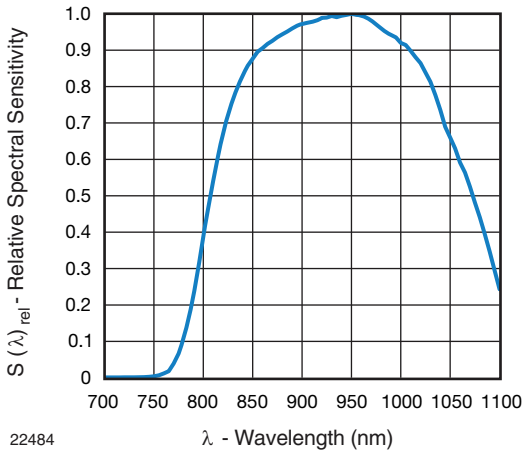

Fig. 2 - Relative Spectral Sensitivity vs. Wavelength

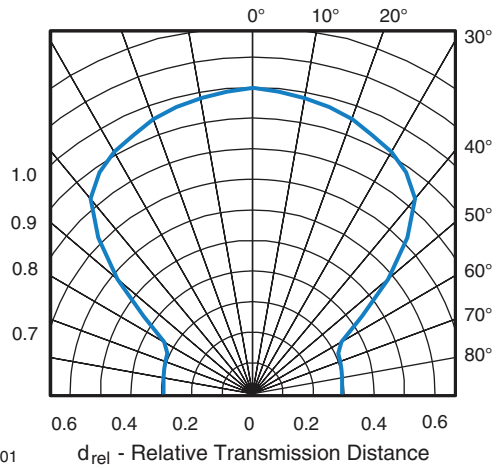

Fig. 3 - Horizontal Directivity

THIS DOCUMENT IS SUBJECT TO CHANGE WITHOUT NOTICE. THE PRODUCTS DESCRIBED HEREIN AND THIS DOCUMENT ARE SUBJECT TO SPECIFIC DISCLAIMERS, SET FORTH AT www.vishay.com/doc?91000

PACKAGE DIMENSIONS in millimeters

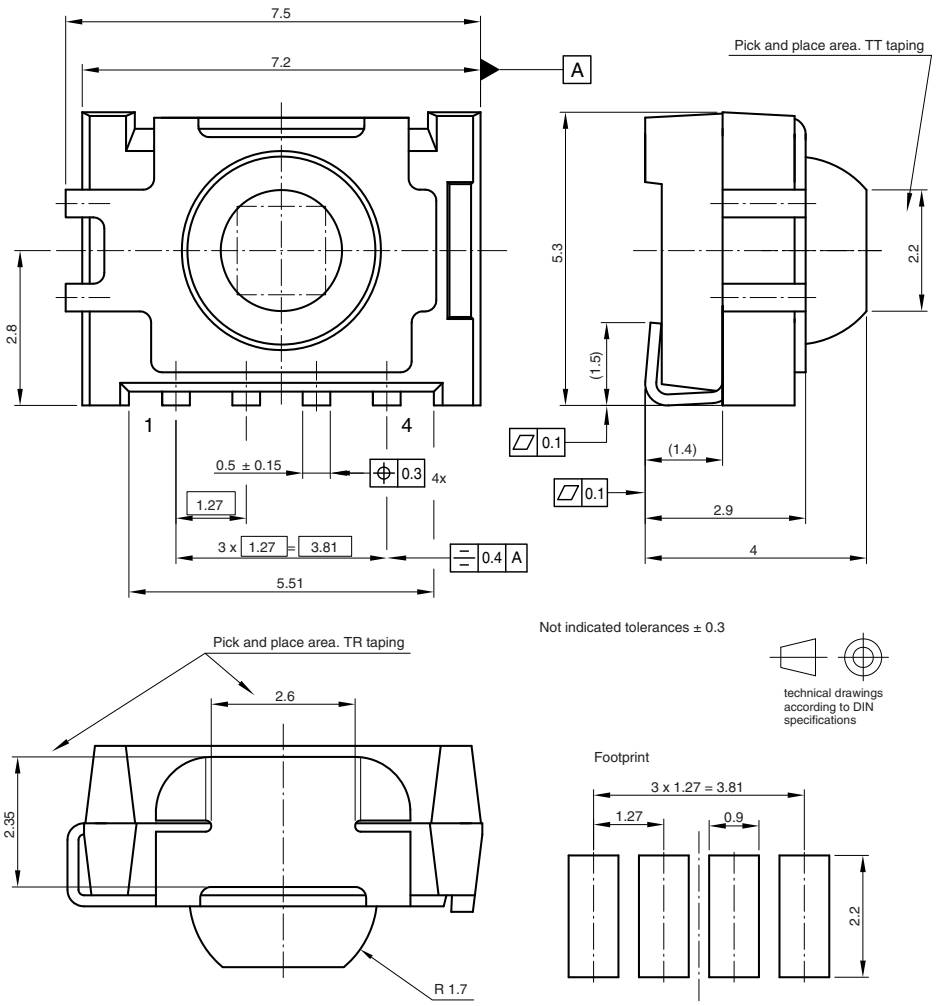

Drawing-No.: 6.544-5341.01-4
Issue: 8; 02.09.09
16776

THIS DOCUMENT IS SUBJECT TO CHANGE WITHOUT NOTICE. THE PRODUCTS DESCRIBED HEREIN AND THIS DOCUMENT ARE SUBJECT TO SPECIFIC DISCLAIMERS, SET FORTH AT www.vishay.com/doc?91000

ASSEMBLY INSTRUCTIONS

Reflow Soldering

- Reflow soldering must be done within 72 h while stored under a max. temperature of 30 °C, 60 % RH after opening the dry pack envelope
- Set the furnace temperatures for pre-heating and heating in accordance with the reflow temperature profile as shown in the diagram. Exercise extreme care to keep the maximum temperature below 260 °C. The temperature shown in the profile means the temperature at the device surface. Since there is a temperature difference between the component and the circuit board, it should be verified that the temperature of the device is accurately being measured
- Handling after reflow should be done only after the work surface has been cooled off

Manual Soldering

- Use a soldering iron of 25 W or less. Adjust the temperature of the soldering iron below 300 °C
- Finish soldering within 3 s
- Handle products only after the temperature has cooled off

VISHAY LEAD (Pb)-FREE REFLOW SOLDER PROFILE

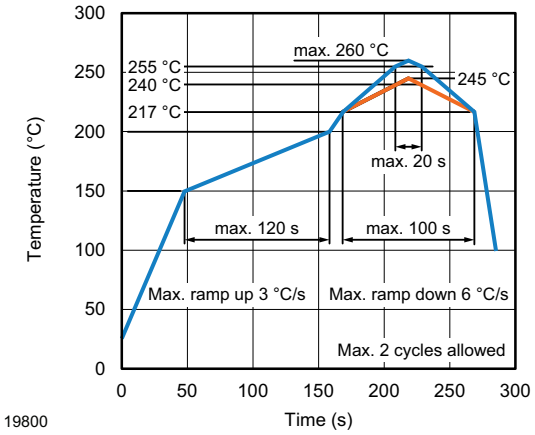

THIS DOCUMENT IS SUBJECT TO CHANGE WITHOUT NOTICE. THE PRODUCTS DESCRIBED HEREIN AND THIS DOCUMENT ARE SUBJECT TO SPECIFIC DISCLAIMERS, SET FORTH AT www.vishay.com/doc?91000

TAPING VERSION TSMP..TT DIMENSIONS in millimeters

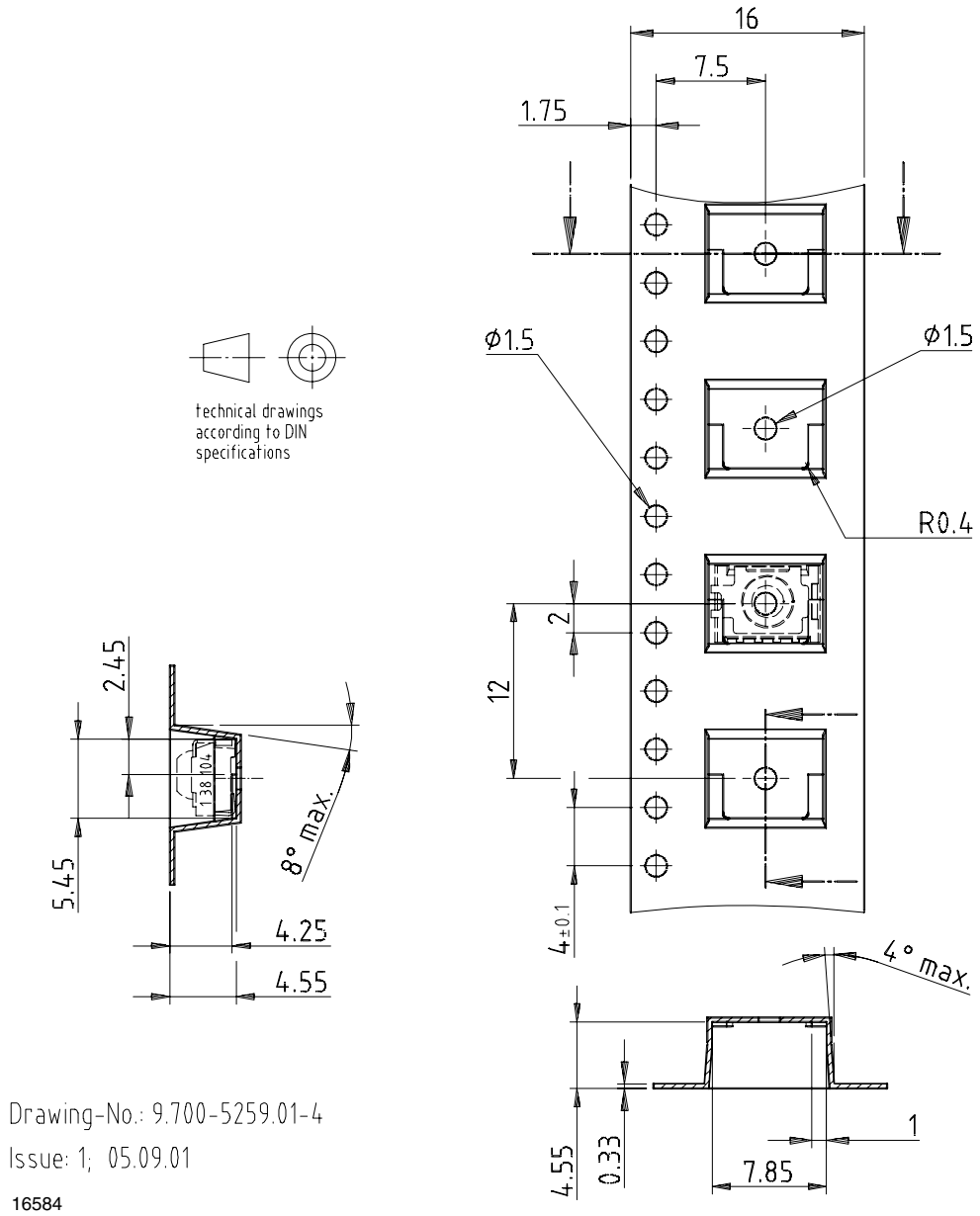

Drawing-No.: 9.700-5259.01-4
Issue: 1; 05.09.01
16584

THIS DOCUMENT IS SUBJECT TO CHANGE WITHOUT NOTICE. THE PRODUCTS DESCRIBED HEREIN AND THIS DOCUMENT ARE SUBJECT TO SPECIFIC DISCLAIMERS, SET FORTH AT www.vishay.com/doc?91000

TAPING VERSION TSMP..TR DIMENSIONS in millimeters

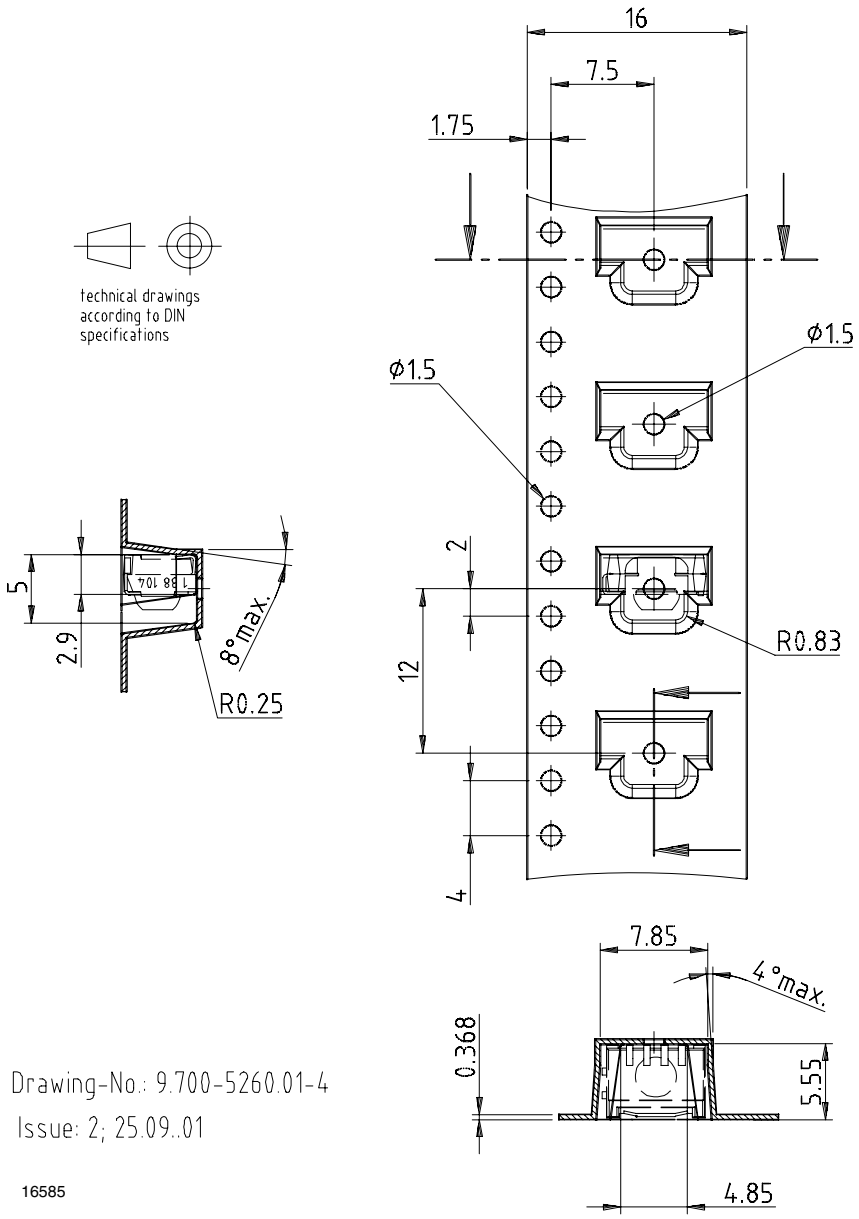

THIS DOCUMENT IS SUBJECT TO CHANGE WITHOUT NOTICE. THE PRODUCTS DESCRIBED HEREIN AND THIS DOCUMENT ARE SUBJECT TO SPECIFIC DISCLAIMERS, SET FORTH AT www.vishay.com/doc?91000

REEL DIMENSIONS in millimeters

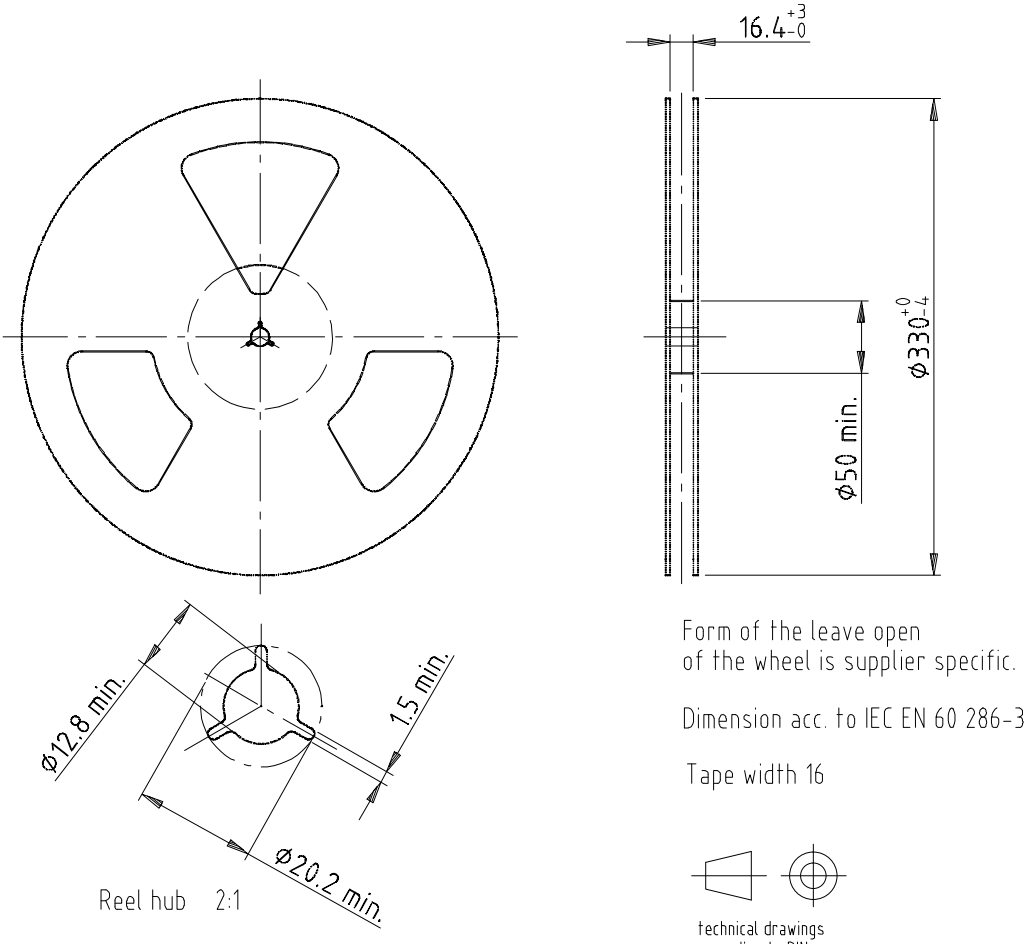

LEADER AND TRAILER DIMENSIONS in millimeters

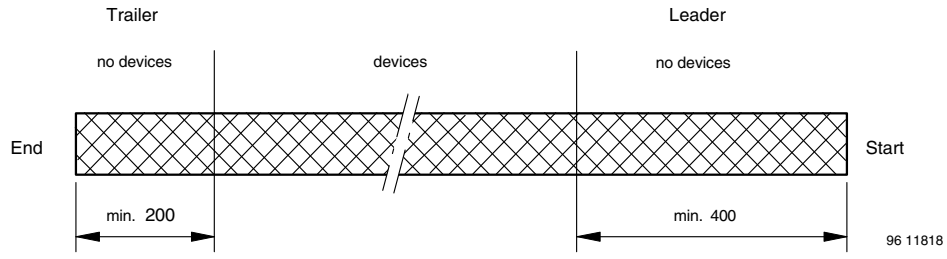

THIS DOCUMENT IS SUBJECT TO CHANGE WITHOUT NOTICE. THE PRODUCTS DESCRIBED HEREIN AND THIS DOCUMENT ARE SUBJECT TO SPECIFIC DISCLAIMERS, SET FORTH AT www.vishay.com/doc?91000

OUTER PACKAGING

The sealed reel is packed into a pizza box.

CARTON BOX DIMENSIONS in millimeters

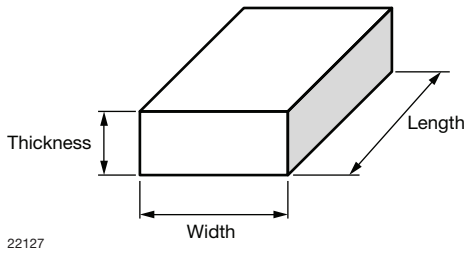

	THICKNESS	WIDTH	LENGTH
Pizza box (SMD and Heimdall) (taping in reels)	50	340	340

COVER TAPE PEEL STRENGTH

According to DIN EN 60286-3

0.1 N to 1.3 N

300 mm/min. ± 10 mm/min.

165° to 180° peel angle

LABEL

Standard bar code labels for finished goods

The standard bar code labels are product labels and used for identification of goods. The finished goods are packed in final packing area. The standard packing units are labeled with standard bar code labels before transported as finished goods to warehouses. The labels are on each packing unit and contain Vishay Semiconductor GmbH specific data.

VISHAY SEMICONDUCTOR GmbH STANDARD BAR CODE PRODUCT LABEL (finished goods)

PLAIN WRITTING	ABBREVIATION	LENGTH
Item-description	-	18
Item-number	INO	8
Selection-code	SEL	3
LOT-/serial-number	BATCH	10
Data-code	COD	3 (YWW)
Plant-code	PTC	2
Quantity	QTY	8
Accepted by	ACC	-
Packed by	PCK	-
Mixed code indicator	MIXED CODE	-
Origin	xxxxxxx+	Company logo
LONG BAR CODE TOP	**TYPE**	**LENGTH**
Item-number	N	8
Plant-code	N	2
Sequence-number	X	3
Quantity	N	8
Total length	-	21
SHORT BAR CODE BOTTOM	**TYPE**	**LENGTH**
Selection-code	X	3
Data-code	N	3
Batch-number	X	10
Filter	-	1
Total length	-	17

THIS DOCUMENT IS SUBJECT TO CHANGE WITHOUT NOTICE. THE PRODUCTS DESCRIBED HEREIN AND THIS DOCUMENT ARE SUBJECT TO SPECIFIC DISCLAIMERS, SET FORTH AT www.vishay.com/doc?91000

DRY PACKING

The reel is packed in an anti-humidity bag to protect the devices from absorbing moisture during transportation and storage.

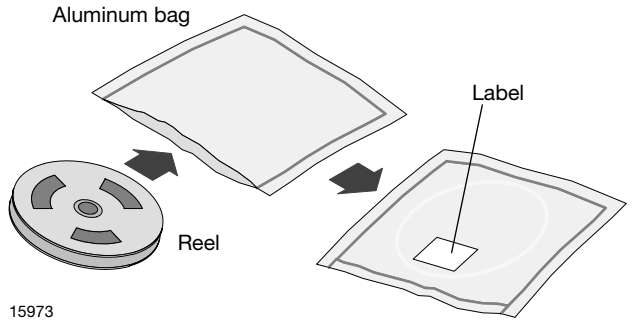

15973

FINAL PACKING

The sealed reel is packed into a cardboard box.

RECOMMENDED METHOD OF STORAGE

Dry box storage is recommended as soon as the aluminum bag has been opened to prevent moisture absorption. The following conditions should be observed, if dry boxes are not available:

- Storage temperature 10 °C to 30 °C
- Storage humidity ≤ 60 % RH max.

After more than 72 h under these conditions moisture content will be too high for reflow soldering.

In case of moisture absorption, the devices will recover to the former condition by drying under the following condition:

192 h at 40 °C + 5 °C / - 0 °C and < 5 % RH (dry air / nitrogen)
or
96 h at 60 °C + 5 °C and < 5 % RH for all device containers
or
24 h at 125 °C + 5 °C not suitable for reel or tubes.

An EIA JEDEC® standard J-STD-020 level 4 label is included on all dry bags.

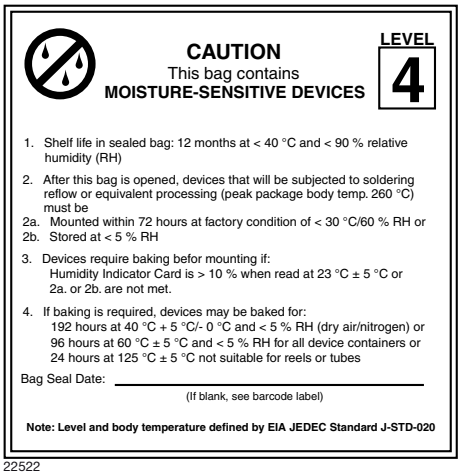

22522

EIA JEDEC standard J-STD-020 level 4 label is included on all dry bags

ESD PRECAUTION

Proper storage and handling procedures should be followed to prevent ESD damage to the devices especially when they are removed from the antistatic shielding bag. Electrostatic sensitive devices warning labels are on the packaging.

VISHAY SEMICONDUCTORS STANDARD BAR CODE LABELS

The Vishay Semiconductors standard bar code labels are printed at final packing areas. The labels are on each packing unit and contain Vishay Semiconductors specific data.

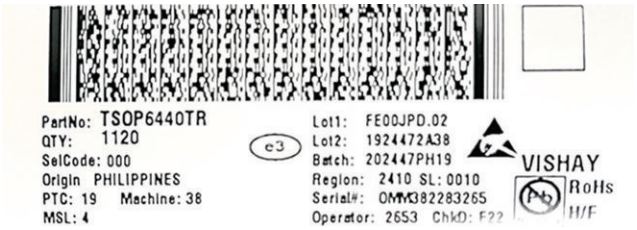

THIS DOCUMENT IS SUBJECT TO CHANGE WITHOUT NOTICE. THE PRODUCTS DESCRIBED HEREIN AND THIS DOCUMENT ARE SUBJECT TO SPECIFIC DISCLAIMERS, SET FORTH AT www.vishay.com/doc?91000

Disclaimer

ALL PRODUCT, PRODUCT SPECIFICATIONS AND DATA ARE SUBJECT TO CHANGE WITHOUT NOTICE TO IMPROVE RELIABILITY, FUNCTION OR DESIGN OR OTHERWISE.

Vishay Intertechnology, Inc., its affiliates, agents, and employees, and all persons acting on its or their behalf (collectively, “Vishay”), disclaim any and all liability for any errors, inaccuracies or incompleteness contained in any datasheet or in any other disclosure relating to any product.

Vishay makes no warranty, representation or guarantee regarding the suitability of the products for any particular purpose or the continuing production of any product. To the maximum extent permitted by applicable law, Vishay disclaims (i) any and all liability arising out of the application or use of any product, (ii) any and all liability, including without limitation special, consequential or incidental damages, and (iii) any and all implied warranties, including warranties of fitness for particular purpose, non-infringement and merchantability.

Statements regarding the suitability of products for certain types of applications are based on Vishay's knowledge of typical requirements that are often placed on Vishay products in generic applications. Such statements are not binding statements about the suitability of products for a particular application. It is the customer's responsibility to validate that a particular product with the properties described in the product specification is suitable for use in a particular application. Parameters provided in datasheets and / or specifications may vary in different applications and performance may vary over time. All operating parameters, including typical parameters, must be validated for each customer application by the customer's technical experts. Product specifications do not expand or otherwise modify Vishay's terms and conditions of purchase, including but not limited to the warranty expressed therein.

Hyperlinks included in this datasheet may direct users to third-party websites. These links are provided as a convenience and for informational purposes only. Inclusion of these hyperlinks does not constitute an endorsement or an approval by Vishay of any of the products, services or opinions of the corporation, organization or individual associated with the third-party website. Vishay disclaims any and all liability and bears no responsibility for the accuracy, legality or content of the third-party website or for that of subsequent links.

Vishay products are not designed for use in life-saving or life-sustaining applications or any application in which the failure of the Vishay product could result in personal injury or death unless specifically qualified in writing by Vishay. Customers using or selling Vishay products not expressly indicated for use in such applications do so at their own risk. Please contact authorized Vishay personnel to obtain written terms and conditions regarding products designed for such applications.

No license, express or implied, by estoppel or otherwise, to any intellectual property rights is granted by this document or by any conduct of Vishay. Product names and markings noted herein may be trademarks of their respective owners.

© 2024 VISHAY INTERTECHNOLOGY, INC. ALL RIGHTS RESERVED

THIS DOCUMENT IS SUBJECT TO CHANGE WITHOUT NOTICE. THE PRODUCTS DESCRIBED HEREIN AND THIS DOCUMENT ARE SUBJECT TO SPECIFIC DISCLAIMERS, SET FORTH AT www.vishay.com/doc?91000