Small Signal Schottky Diodes



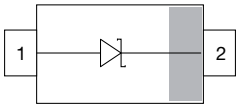

LINKS TO ADDITIONAL RESOURCES

3D Models | Models | Marking | Parametric Search | Order Samples

MECHANICAL DATA

Case: SOD-123

Weight: approx. 10.6 mg

Packaging codes/options:

18/10K per 13" reel (8 mm tape), 10K/box

08/3K per 7" reel (8 mm tape), 15K/box

FEATURES

- The low forward voltage drop and fast switching make it ideal for protection of MOS devices, steering, biasing, and coupling diodes for fast switching and low logic level applications
- Other applications are click suppression, efficient full wave bridges in telephone subsets, and blocking diodes in rechargeable low voltage battery systems
- The SD103 series is a metal-on-silicon Schottky barrier device which is protected by a PN junction guardring
- For general purpose applications
- AEC-Q101 qualified available
  (part number on request)
- Molding compound meets UL 94 V-0 flammability rating
- Moisture Sensitivity Level (MSL) 1
- Base P/N-G3 - green, commercial grade
- Material categorization: for definitions of compliance please see www.vishay.com/doc?99912

Pb-free

e3

RoHS COMPLIANT

HALOGEN FREE GREEN (5-2008)

PARTS TABLE

PART	ORDERING CODE	AEC-Q101 QUALIFIED	TYPE MARKING	CIRCUIT CONFIGURATION	TAPED UNITS PER REEL	MINIMUM ORDER QUANTITY
SD103AW-G	SD103AW-G3-08	no	Z6	Single	3 000 (8 mm tape on 7” reel)	15 000
	SD103AW-G3-18	no			10 000 (8 mm tape on 13” reel)	10 000
SD103B-G	SD103BW-G3-08	no	Z7	Single	3 000 (8 mm tape on 7” reel)	15 000
	SD103BW-G3-18	no			10 000 (8 mm tape on 13” reel)	10 000
SD103CW-G	SD103CW-G3-08	no	Z8	Single	3 000 (8 mm tape on 7” reel)	15 000
	SD103CW-G3-18	no			10 000 (8 mm tape on 13” reel)	10 000

PACKAGE

PACKAGE NAME	WEIGHT	MOLDING COMPOUND FLAMMABILITY RATING	MOISTURE SENSITIVITY LEVEL	SOLDERING CONDITIONS
SOD-123	10.6 mg	UL 94 V-0	MSL 1 (according J-STD-020)	Peak temperature max. 260 °C

For technical questions within your region: DiodesAmericas@vishay.com, DiodesAsia@vishay.com, DiodesEurope@vishay.com

THIS DOCUMENT IS SUBJECT TO CHANGE WITHOUT NOTICE. THE PRODUCTS DESCRIBED HEREIN AND THIS DOCUMENT ARE SUBJECT TO SPECIFIC DISCLAIMERS, SET FORTH AT www.vishay.com/doc?91000

ABSOLUTE MAXIMUM RATINGS (T_{amb} = 25 °C, unless otherwise specified)					
PARAMETER	**TEST CONDITION**	**PART**	**SYMBOL**	**VALUE**	**UNIT**
Repetitive peak reverse voltage		SD103AW	V_{RRM}	40	V
		SD103BW	V_{RRM}	30	V
		SD103CW	V_{RRM}	20	V
Forward continuous current (1)			I_F	350	mA
Power dissipation	on FR-4 board with recommended soldering footprint		P_{tot}	270	mW
	Infinite heatsink			370	mW
Single cycle surge	10 µs square wave		I_{FSM}	2	A

Note
(1) Infinite heatsink

THERMAL CHARACTERISTICS (T_{amb} = 25 °C, unless otherwise specified)				
PARAMETER	**TEST CONDITION**	**SYMBOL**	**VALUE**	**UNIT**
Thermal resistance junction to ambient air	according to JEDEC® 51-3 on FR-4 board with recommended soldering footprint	R_{thJA}	370	K/W
Thermal resistance junction lead	Infinite heatsink	R_{thJL}	270	K/W
Maximum junction temperature		T_j	125	°C
Storage temperature range		T_{stg}	-65 to +150	°C
Operating temperature range		T_{op}	-55 to +125	°C

ELECTRICAL CHARACTERISTICS (T_{amb} = 25 °C, unless otherwise specified)							
PARAMETER	**TEST CONDITION**	**PART**	**SYMBOL**	**MIN.**	**TYP.**	**MAX.**	**UNIT**
Leakage current	V_R = 30 V	SD103AW	I_R			5	µA
	V_R = 20 V	SD103BW	I_R			5	µA
	V_R = 10 V	SD103CW	I_R			5	µA
Forward voltage drop	I_F = 20 mA		V_F			370	mV
	I_F = 200 mA		V_F			600	mV
Diode capacitance	V_R = 0 V, f = 1 MHz		C_D		50		pF
Reverse recovery time	I_F = I_R = 50 mA to 200 mA, recover to 0.1 I_R		t_{rr}		10		ns

For technical questions within your region: DiodesAmericas@vishay.com, DiodesAsia@vishay.com, DiodesEurope@vishay.com
THIS DOCUMENT IS SUBJECT TO CHANGE WITHOUT NOTICE. THE PRODUCTS DESCRIBED HEREIN AND THIS DOCUMENT ARE SUBJECT TO SPECIFIC DISCLAIMERS, SET FORTH AT www.vishay.com/doc?91000

TYPICAL CHARACTERISTICS (T_{amb} = 25 °C, unless otherwise specified)

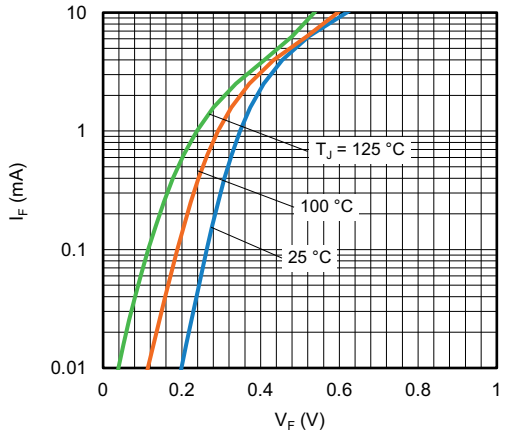

Fig. 1 - Typical Forward Current vs. Forward Voltage

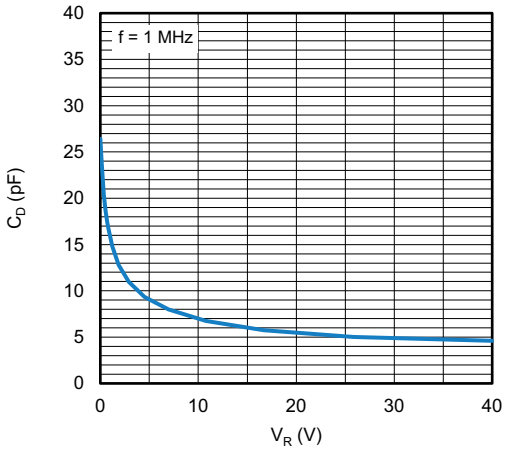

Fig. 3 - Typical Capacitance vs. Reverse Voltages

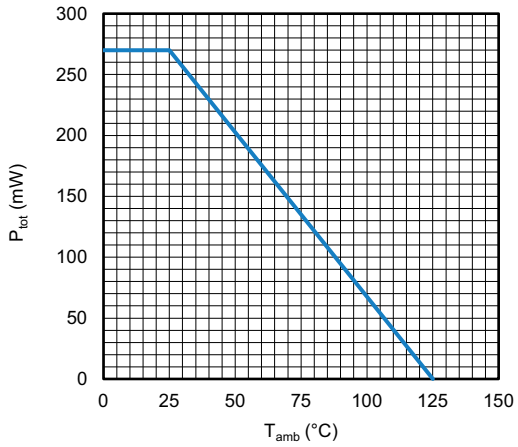

Fig. 2 - Admissible Power Dissipation vs. Ambient Temperature

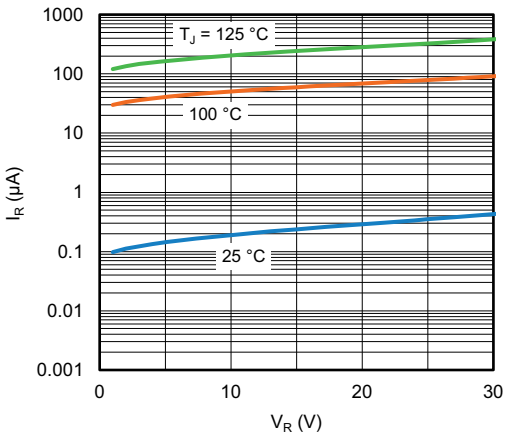

Fig. 4 - Typical Reverse Leakage vs. Reverse Voltage

For technical questions within your region: DiodesAmericas@vishay.com, DiodesAsia@vishay.com, DiodesEurope@vishay.com
THIS DOCUMENT IS SUBJECT TO CHANGE WITHOUT NOTICE. THE PRODUCTS DESCRIBED HEREIN AND THIS DOCUMENT ARE SUBJECT TO SPECIFIC DISCLAIMERS, SET FORTH AT www.vishay.com/doc?91000

PACKAGE DIMENSIONS in millimeters (inches): **SOD-123**

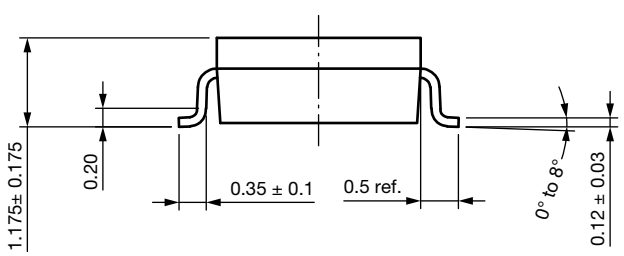

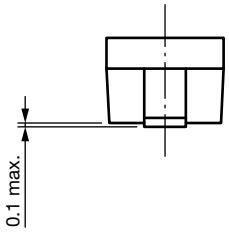

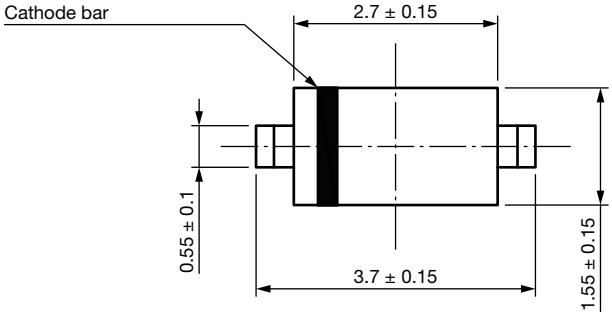

Foot print recommendation

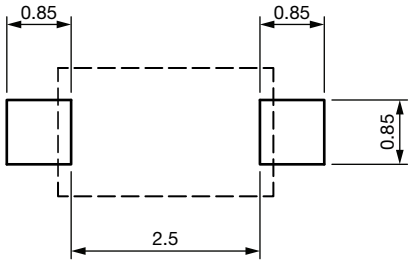

Rev. 01 - Date: 18. Jan. 2022
Document no.: S8-V-3910.01-003 (4)

23223

For technical questions within your region: DiodesAmericas@vishay.com, DiodesAsia@vishay.com, DiodesEurope@vishay.com
THIS DOCUMENT IS SUBJECT TO CHANGE WITHOUT NOTICE. THE PRODUCTS DESCRIBED HEREIN AND THIS DOCUMENT ARE SUBJECT TO SPECIFIC DISCLAIMERS, SET FORTH AT www.vishay.com/doc?91000

CARRIER TAPE SOD-123

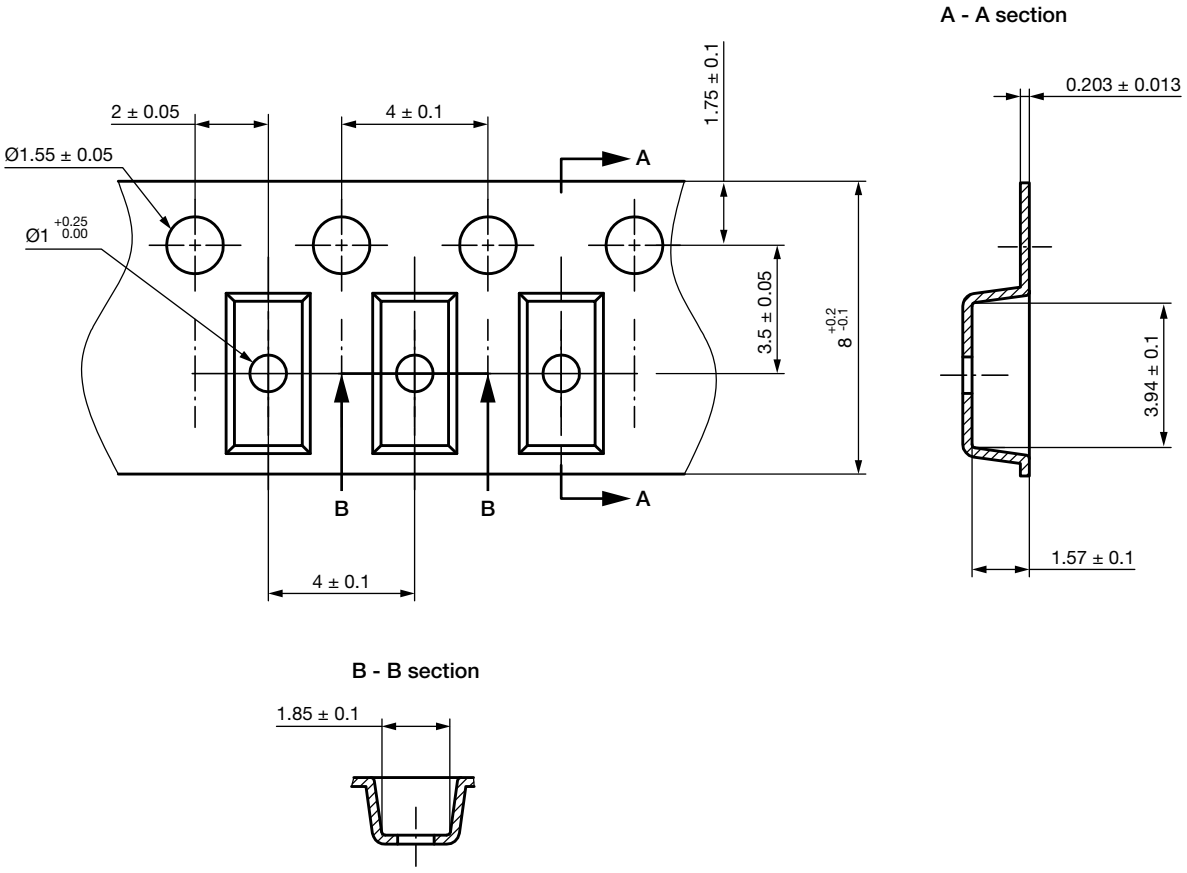

Rev. 02 - Date: 21. Jan. 2014
Document no.: S8-V-3717.10-002 (4)

23224

ORIENTATION IN CARRIER TAPE SOD-123

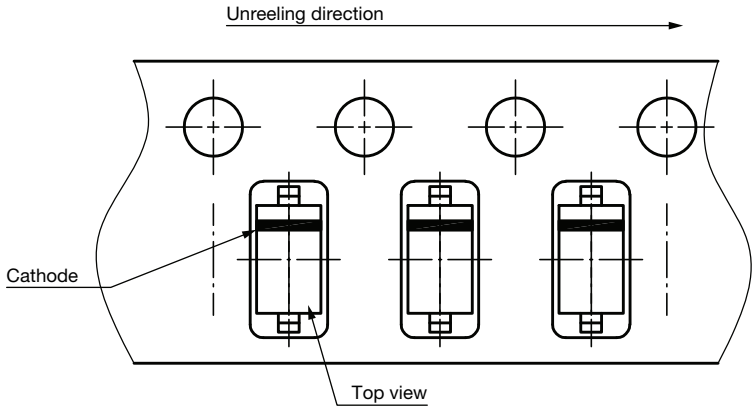

Rev. 02 - Date: 07. Nov. 2022
Document no.: S8-V-3717.10-003 (4)

23225

For technical questions within your region: DiodesAmericas@vishay.com, DiodesAsia@vishay.com, DiodesEurope@vishay.com
THIS DOCUMENT IS SUBJECT TO CHANGE WITHOUT NOTICE. THE PRODUCTS DESCRIBED HEREIN AND THIS DOCUMENT ARE SUBJECT TO SPECIFIC DISCLAIMERS, SET FORTH AT www.vishay.com/doc?91000

Disclaimer

ALL PRODUCT, PRODUCT SPECIFICATIONS AND DATA ARE SUBJECT TO CHANGE WITHOUT NOTICE TO IMPROVE RELIABILITY, FUNCTION OR DESIGN OR OTHERWISE.

Vishay Intertechnology, Inc., its affiliates, agents, and employees, and all persons acting on its or their behalf (collectively, “Vishay”), disclaim any and all liability for any errors, inaccuracies or incompleteness contained in any datasheet or in any other disclosure relating to any product.

Vishay makes no warranty, representation or guarantee regarding the suitability of the products for any particular purpose or the continuing production of any product. To the maximum extent permitted by applicable law, Vishay disclaims (i) any and all liability arising out of the application or use of any product, (ii) any and all liability, including without limitation special, consequential or incidental damages, and (iii) any and all implied warranties, including warranties of fitness for particular purpose, non-infringement and merchantability.

Statements regarding the suitability of products for certain types of applications are based on Vishay's knowledge of typical requirements that are often placed on Vishay products in generic applications. Such statements are not binding statements about the suitability of products for a particular application. It is the customer's responsibility to validate that a particular product with the properties described in the product specification is suitable for use in a particular application. Parameters provided in datasheets and / or specifications may vary in different applications and performance may vary over time. All operating parameters, including typical parameters, must be validated for each customer application by the customer's technical experts. Product specifications do not expand or otherwise modify Vishay's terms and conditions of purchase, including but not limited to the warranty expressed therein.

Hyperlinks included in this datasheet may direct users to third-party websites. These links are provided as a convenience and for informational purposes only. Inclusion of these hyperlinks does not constitute an endorsement or an approval by Vishay of any of the products, services or opinions of the corporation, organization or individual associated with the third-party website. Vishay disclaims any and all liability and bears no responsibility for the accuracy, legality or content of the third-party website or for that of subsequent links.

Vishay products are not designed for use in life-saving or life-sustaining applications or any application in which the failure of the Vishay product could result in personal injury or death unless specifically qualified in writing by Vishay. Customers using or selling Vishay products not expressly indicated for use in such applications do so at their own risk. Please contact authorized Vishay personnel to obtain written terms and conditions regarding products designed for such applications.

No license, express or implied, by estoppel or otherwise, to any intellectual property rights is granted by this document or by any conduct of Vishay. Product names and markings noted herein may be trademarks of their respective owners.

© 2024 VISHAY INTERTECHNOLOGY, INC. ALL RIGHTS RESERVED