IR Sensor Module for Remote Control Systems

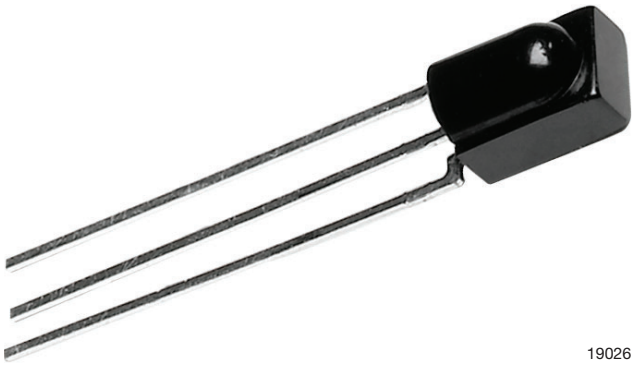

19026

LINKS TO ADDITIONAL RESOURCES

Product Page | Marking | Packages | Holders | Bends and Cuts

DESCRIPTION

The TSMP98000 is a miniaturized sensor for receiving the modulated signal of infrared remote control systems. A PIN diode and preamplifier are assembled on a lead frame, the epoxy package is designed as an IR filter. The modulated output signal, carrier out, can be used for code learning applications.

This component has not been qualified according to automotive specifications.

FEATURES

- Photo detector and preamplifier in one package
- AC coupled response from 30 kHz to 60 kHz, all data formats
- Improved shielding against electrical field disturbance
- TTL and CMOS compatibility
- Output active low
- Supply voltage 2.0 V to 5.5 V
- Carrier out signal for code learning functions
- Material categorization: for definitions of compliance please see www.vishay.com/doc?99912

Pb-free

e3

RoHS COMPLIANT

HALOGEN FREE GREEN (5-2008)

APPLICATIONS

- Infrared code learning

DESIGN SUPPORT TOOLS

- 3D models
- Window size calculator

BLOCK DIAGRAM

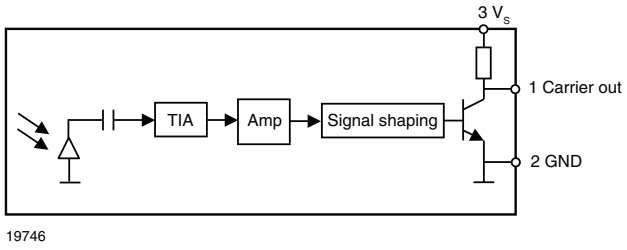

19746

THIS DOCUMENT IS SUBJECT TO CHANGE WITHOUT NOTICE. THE PRODUCTS DESCRIBED HEREIN AND THIS DOCUMENT ARE SUBJECT TO SPECIFIC DISCLAIMERS, SET FORTH AT www.vishay.com/doc?91000

MECHANICAL DATA

Pinning:

1 = carrier OUT, 2 = GND, 3 = V_S

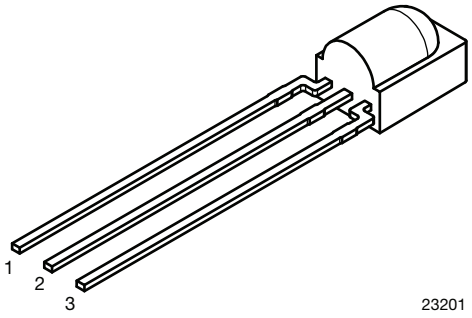

ORDERING CODE

TSMP98000 - 1500 pieces in bags

APPLICATION CIRCUIT

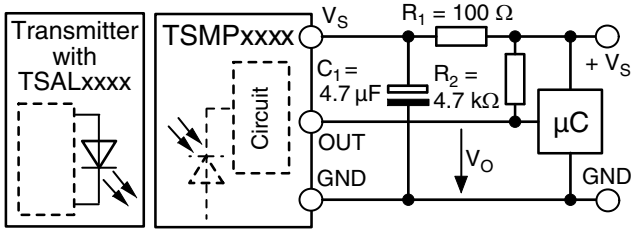

R_1 + C_1 recommended to suppress power supply disturbances.
R_2 recommended to get faster slopes and a correct high level of the output pulses.

PARTS TABLE		
Carrier frequency	30 kHz to 60 kHz	TSMP98000
Package		Minicast
Pinning		1 = carrier OUT, 2 = GND, 3 = V_S
Dimensions (mm)		5.0 W x 6.95 H x 4.8 D
Mounting		Leaded
Application		Code learning

ABSOLUTE MAXIMUM RATINGS (T_{amb} = 25 °C, unless otherwise specified)

PARAMETER	TEST CONDITION	SYMBOL	VALUE	UNIT
Supply voltage (pin 3)		V_S	-0.3 to +6	V
Output voltage (pin 1)		V_O	-0.3 to (V_S + 0.3)	V
Output current (pin 1)		I_O	5	mA
Junction temperature		T_j	100	°C
Storage temperature range		T_{stg}	-25 to +85	°C
Operating temperature range		T_{amb}	-25 to +85	°C
Soldering temperature	t ≤ 10 s, 1 mm from case	T_{sd}	260	°C

Note

- Stresses beyond those listed under “Absolute Maximum Ratings” may cause permanent damage to the device. This is a stress rating only and functional operation of the device at these or any other conditions beyond those indicated in the operational sections of this specification is not implied. Exposure to absolute maximum rating conditions for extended periods may affect the device reliability

ELECTRICAL AND OPTICAL CHARACTERISTICS CARRIER OUT
(T_{amb} = 25 °C, unless otherwise specified, V_S = 3 V)

PARAMETER	TEST CONDITION	SYMBOL	MIN.	TYP.	MAX.	UNIT
Supply current (pin 3)	V_S = 3.3 V, E_v = 0	I_{SD}	0.25	0.35	0.45	mA
Supply voltage		V_S	2.0	-	5.5	V
Transmission distance	E_v = 0, test signal see Fig. 1, IR diode TSAL6200, I_F = 50 mA	d	-	1.8	-	m
Output voltage low (pin 1)	I_{OSL} = 0.5 mA, test signal see Fig. 1	V_{OSL}	-	-	250	mV
Minimum irradiance	V_S = 3 V, (30 kHz to 60 kHz)	$E_{e\ min.}$	-	12	25	mW/m²
Maximum irradiance	Test signal see Fig. 1, (30 kHz to 60 kHz)	$E_{e\ max.}$	30	-	-	W/m²
Directivity	Angle of half transmission distance	$\varphi_{1/2}$	-	± 45	-	deg
Output accuracy	f_C = 30 kHz to 60 kHz, E_e = 25 mW/m² to 30 W/m², test signal see Fig. 1, BER ≤ 2%	N carrier pulses	input burst length - 1 cycle	input burst length	input burst length + 1 cycle	counts

THIS DOCUMENT IS SUBJECT TO CHANGE WITHOUT NOTICE. THE PRODUCTS DESCRIBED HEREIN AND THIS DOCUMENT ARE SUBJECT TO SPECIFIC DISCLAIMERS, SET FORTH AT www.vishay.com/doc?91000

TYPICAL CHARACTERISTICS (T_{amb} = 25 °C, unless otherwise specified)

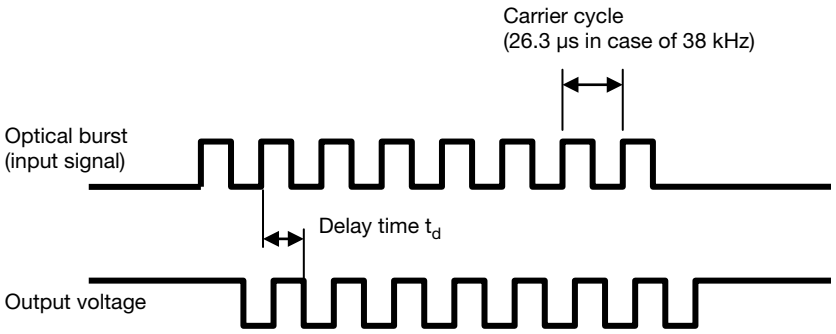

Fig. 1 - Testsignal

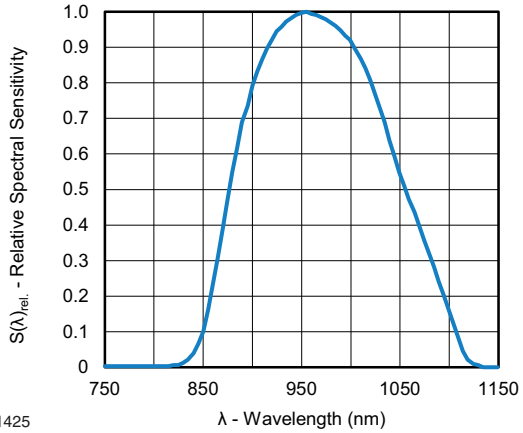

Fig. 2 - Relative Spectral Sensitivity vs. Wavelength

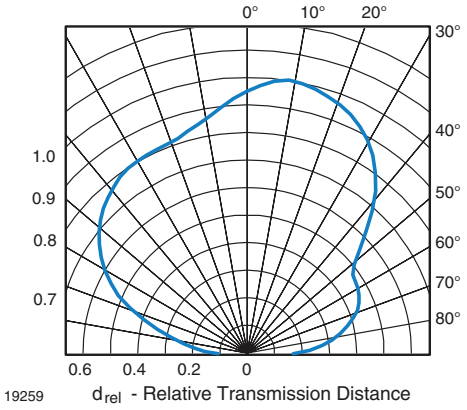

Fig. 4 - Vertical Directivity

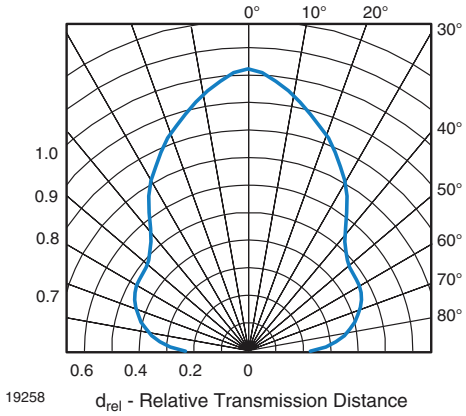

Fig. 3 - Horizontal Directivity

THIS DOCUMENT IS SUBJECT TO CHANGE WITHOUT NOTICE. THE PRODUCTS DESCRIBED HEREIN AND THIS DOCUMENT ARE SUBJECT TO SPECIFIC DISCLAIMERS, SET FORTH AT www.vishay.com/doc?91000

PACKAGE DIMENSIONS in millimeters

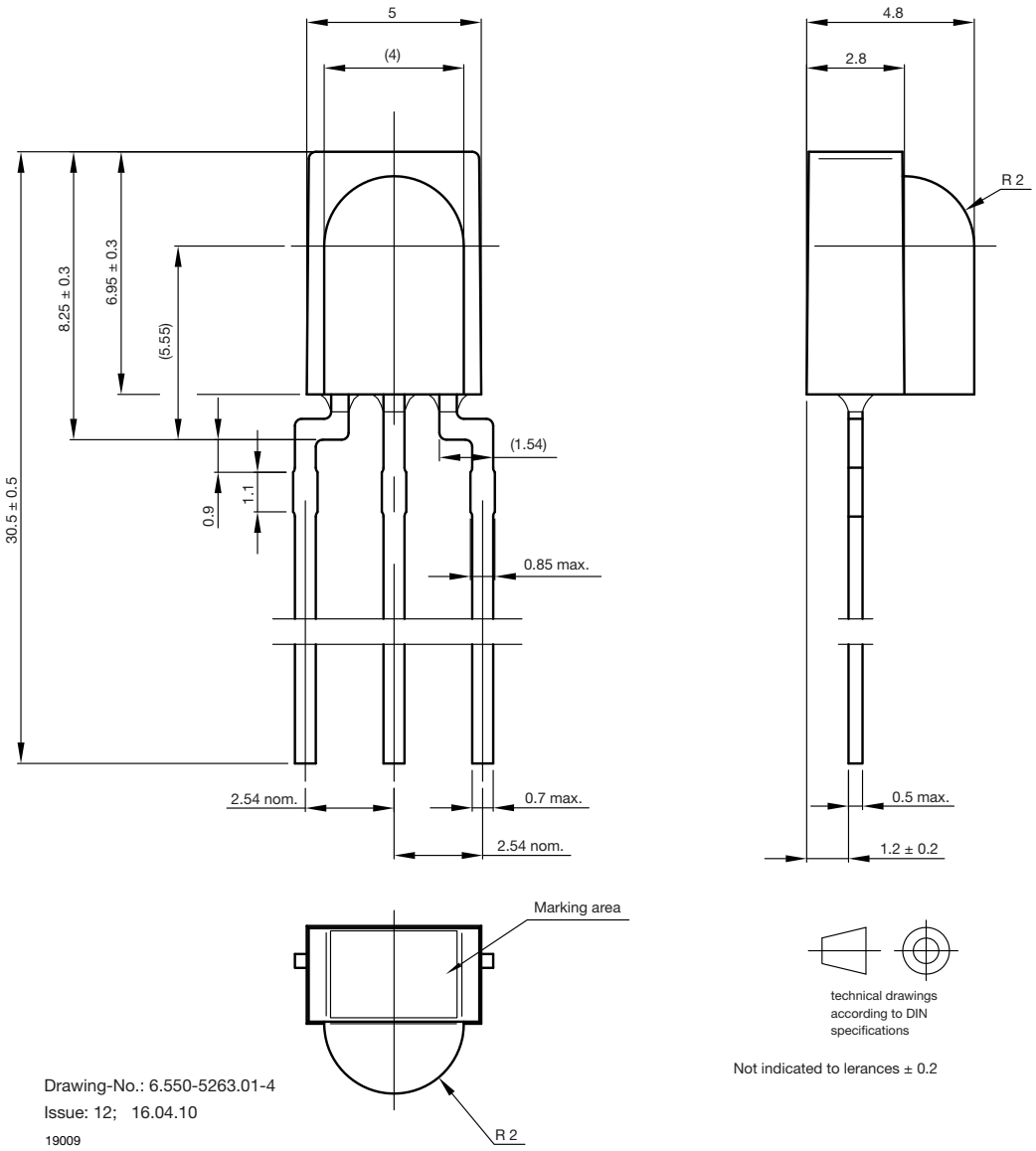

Drawing-No.: 6.550-5263.01-4
Issue: 12; 16.04.10
19009

THIS DOCUMENT IS SUBJECT TO CHANGE WITHOUT NOTICE. THE PRODUCTS DESCRIBED HEREIN AND THIS DOCUMENT ARE SUBJECT TO SPECIFIC DISCLAIMERS, SET FORTH AT www.vishay.com/doc?91000

Disclaimer

ALL PRODUCT, PRODUCT SPECIFICATIONS AND DATA ARE SUBJECT TO CHANGE WITHOUT NOTICE TO IMPROVE RELIABILITY, FUNCTION OR DESIGN OR OTHERWISE.

Vishay Intertechnology, Inc., its affiliates, agents, and employees, and all persons acting on its or their behalf (collectively, “Vishay”), disclaim any and all liability for any errors, inaccuracies or incompleteness contained in any datasheet or in any other disclosure relating to any product.

Vishay makes no warranty, representation or guarantee regarding the suitability of the products for any particular purpose or the continuing production of any product. To the maximum extent permitted by applicable law, Vishay disclaims (i) any and all liability arising out of the application or use of any product, (ii) any and all liability, including without limitation special, consequential or incidental damages, and (iii) any and all implied warranties, including warranties of fitness for particular purpose, non-infringement and merchantability.

Statements regarding the suitability of products for certain types of applications are based on Vishay's knowledge of typical requirements that are often placed on Vishay products in generic applications. Such statements are not binding statements about the suitability of products for a particular application. It is the customer's responsibility to validate that a particular product with the properties described in the product specification is suitable for use in a particular application. Parameters provided in datasheets and / or specifications may vary in different applications and performance may vary over time. All operating parameters, including typical parameters, must be validated for each customer application by the customer's technical experts. Product specifications do not expand or otherwise modify Vishay's terms and conditions of purchase, including but not limited to the warranty expressed therein.

Hyperlinks included in this datasheet may direct users to third-party websites. These links are provided as a convenience and for informational purposes only. Inclusion of these hyperlinks does not constitute an endorsement or an approval by Vishay of any of the products, services or opinions of the corporation, organization or individual associated with the third-party website. Vishay disclaims any and all liability and bears no responsibility for the accuracy, legality or content of the third-party website or for that of subsequent links.

Except as expressly indicated in writing, Vishay products are not designed for use in medical, life-saving, or life-sustaining applications or for any other application in which the failure of the Vishay product could result in personal injury or death. Customers using or selling Vishay products not expressly indicated for use in such applications do so at their own risk. Please contact authorized Vishay personnel to obtain written terms and conditions regarding products designed for such applications.

No license, express or implied, by estoppel or otherwise, to any intellectual property rights is granted by this document or by any conduct of Vishay. Product names and markings noted herein may be trademarks of their respective owners.

© 2022 VISHAY INTERTECHNOLOGY, INC. ALL RIGHTS RESERVED