High Performance Schottky Rectifier, 2 x 20 A

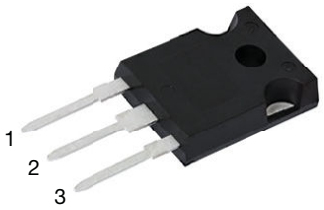

TO-247AC 3L

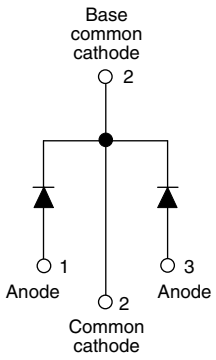

FEATURES

- 150 °C T_J operation
- Very low forward voltage drop
- High frequency operation
- High purity, high temperature epoxy encapsulation for enhanced mechanical strength and moisture resistance
- Guard ring for enhanced ruggedness and long term reliability
- Designed and qualified according to JEDEC®-JESD 47
- Material categorization: for definitions of compliance please see www.vishay.com/doc?99912

Pb-free

RoHS COMPLIANT

HALOGEN FREE

DESCRIPTION

The VS-STPS40L40CW... center tap Schottky rectifier has been optimized for very low forward voltage drop, with moderate leakage. The proprietary barrier technology allows for reliable operation up to 150 °C junction temperature. Typical applications are in switching power supplies, converters, freewheeling diodes, and reverse battery protection.

PRIMARY CHARACTERISTICS	
$I_{F(AV)}$	2 x 20 A
V_R	40 V
V_F at I_F	0.43 V
I_{RM} max.	60 mA at 100 °C
T_J max.	150 °C
E_{AS}	27 mJ
Package	TO-247AC 3L
Circuit configuration	Common cathode

MAJOR RATINGS AND CHARACTERISTICS			
SYMBOL	CHARACTERISTICS	VALUES	UNITS
$I_{F(AV)}$	Rectangular waveform	40	A
V_{RRM}		40	V
I_{FSM}	t_p = 5 µs sine	3500	A
V_F	20 A_{pk}, T_J = 125 °C (per leg)	0.43	V
T_J		-55 to +150	°C

VOLTAGE RATINGS			
PARAMETER	SYMBOL	VS-STPS40L40CW-N3	UNITS
Maximum DC reverse voltage	V_R	40	V
Maximum working peak reverse voltage	V_{RWM}		

ABSOLUTE MAXIMUM RATINGS					
PARAMETER	SYMBOL	TEST CONDITIONS		VALUES	UNITS
Maximum average forward current See fig. 5	$I_{F(AV)}$	50 % duty cycle at T_C = 120 °C, rectangular waveform		40	A
Maximum peak one cycle non-repetitive surge current per leg See fig. 7	I_{FSM}	5 µs sine or 3 µs rect. pulse	Following any rated load condition and with rated V_{RRM} applied	3500	
		10 ms sine or 6 ms rect. pulse		430	
Non-repetitive avalanche energy per leg	E_{AS}	T_J = 25 °C, I_{AS} = 4 A, L = 3.4 mH		27	mJ
Repetitive avalanche current per leg	I_{AR}	Current decaying linearly to zero in 1 µs Frequency limited by T_J maximum V_A = 1.5 x V_R typical		4	A

For technical questions within your region: DiodesAmericas@vishay.com, DiodesAsia@vishay.com, DiodesEurope@vishay.com

THIS DOCUMENT IS SUBJECT TO CHANGE WITHOUT NOTICE. THE PRODUCTS DESCRIBED HEREIN AND THIS DOCUMENT ARE SUBJECT TO SPECIFIC DISCLAIMERS, SET FORTH AT www.vishay.com/doc?91000

ELECTRICAL SPECIFICATIONS

PARAMETER	SYMBOL	TEST CONDITIONS		VALUES	UNITS
Maximum forward voltage drop per leg See fig. 1	V_{FM} (1)	20 A	T_J = 25 °C	0.49	V
		40 A		0.59	
		20 A	T_J = 125 °C	0.43	
		40 A		0.56	
Maximum reverse leakage current per leg See fig. 2	I_{RM} (1)	T_J = 25 °C	V_R = Rated V_R	0.8	mA
		T_J = 100 °C		60	
Maximum junction capacitance per leg	C_T	V_R = 5 V_{DC} (test signal range 100 kHz to 1 MHz) 25 °C		1850	pF
Typical series inductance per leg	L_S	Measured lead to lead 5 mm from package body		7.5	nH
Maximum voltage rate of change	dV/dt	Rated V_R		10 000	V/µs

Note

(1) Pulse width < 300 µs, duty cycle < 2 %

THERMAL - MECHANICAL SPECIFICATIONS

PARAMETER		SYMBOL	TEST CONDITIONS	VALUES	UNITS
Maximum junction and storage temperature range		T_J, T_{Stg}		-55 to 150	°C
Maximum thermal resistance, junction to case per leg		R_{thJC}	DC operation See fig. 4	1.25	°C/W
Maximum thermal resistance, junction to case per package			DC operation	0.63	
Typical thermal resistance, case to heatsink		R_{thCS}	Mounting surface, smooth and greased	0.24	
Approximate weight				6	g
				0.21	oz.
Mounting torque	minimum		Non-lubricated threads	6 (5)	kgf · cm (lbf · in)
	maximum			12 (10)	
Marking device			Case style TO-247AC 3L	STPS40L40CW	

For technical questions within your region: DiodesAmericas@vishay.com, DiodesAsia@vishay.com, DiodesEurope@vishay.com
THIS DOCUMENT IS SUBJECT TO CHANGE WITHOUT NOTICE. THE PRODUCTS DESCRIBED HEREIN AND THIS DOCUMENT ARE SUBJECT TO SPECIFIC DISCLAIMERS, SET FORTH AT www.vishay.com/doc?91000

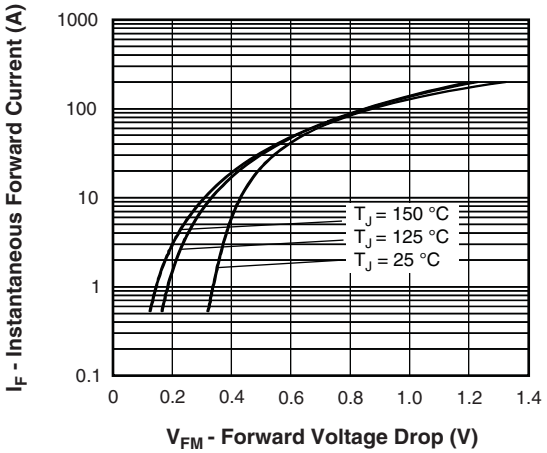

Fig. 1 - Maximum Forward Voltage Drop Characteristics (Per Leg)

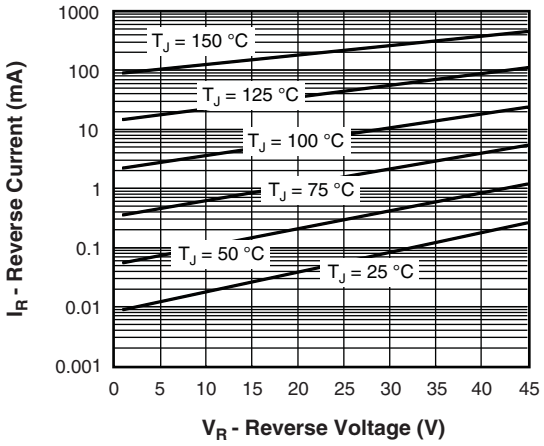

Fig. 2 - Typical Values of Reverse Current vs. Reverse Voltage (Per Leg)

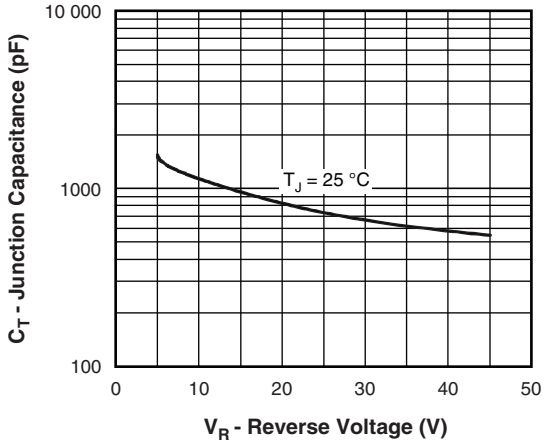

Fig. 3 - Typical Junction Capacitance vs. Reverse Voltage (Per Leg)

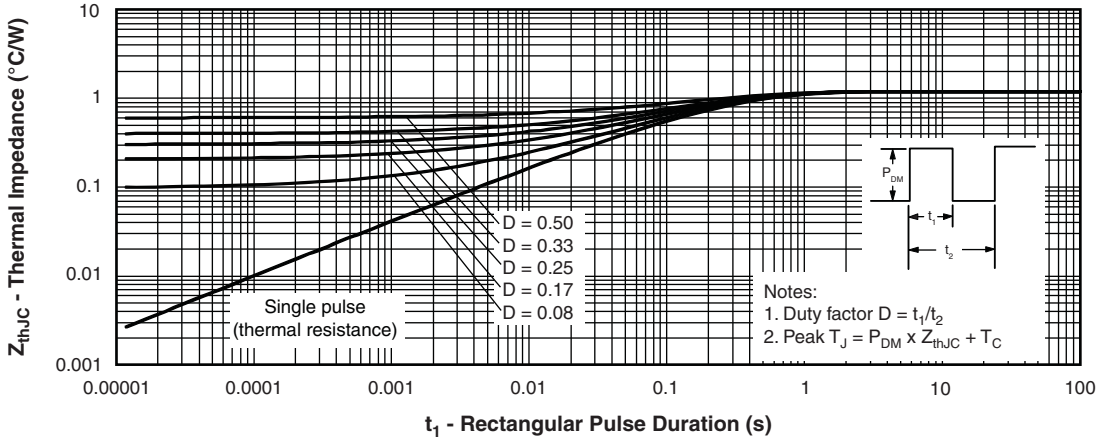

Fig. 4 - Maximum Thermal Impedance Z_{thJC} Characteristics (Per Leg)

For technical questions within your region: DiodesAmericas@vishay.com, DiodesAsia@vishay.com, DiodesEurope@vishay.com
THIS DOCUMENT IS SUBJECT TO CHANGE WITHOUT NOTICE. THE PRODUCTS DESCRIBED HEREIN AND THIS DOCUMENT ARE SUBJECT TO SPECIFIC DISCLAIMERS, SET FORTH AT www.vishay.com/doc?91000

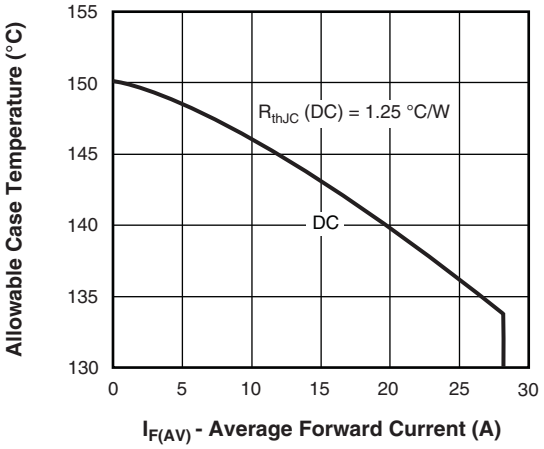

Fig. 5 - Maximum Allowable Case Temperature vs. Average Forward Current (Per Leg)

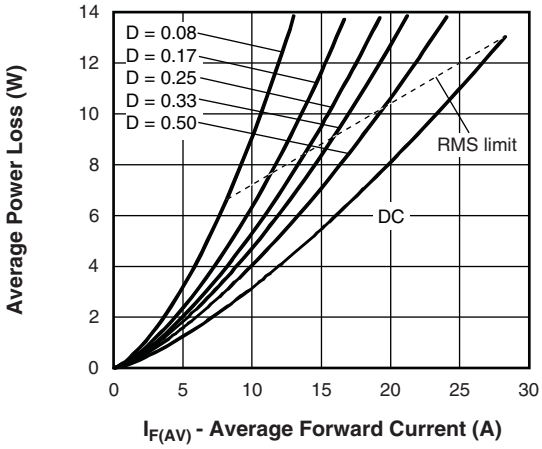

Fig. 6 - Forward Power Loss Characteristics (Per Leg)

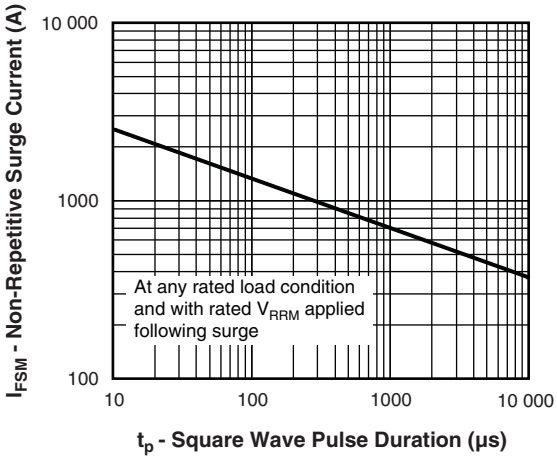

Fig. 7 - Maximum Non-Repetitive Surge Current (Per Leg)

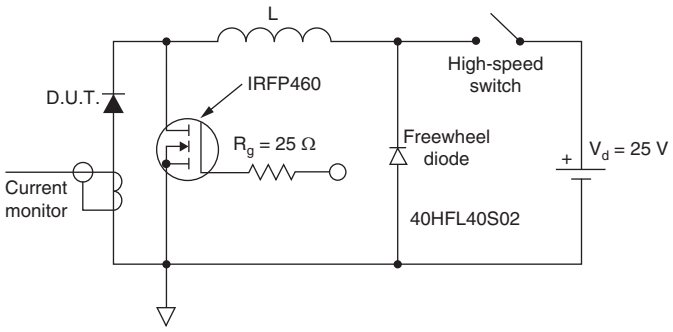

Fig. 8 - Unclamped Inductive Test Circuit

For technical questions within your region: DiodesAmericas@vishay.com, DiodesAsia@vishay.com, DiodesEurope@vishay.com
THIS DOCUMENT IS SUBJECT TO CHANGE WITHOUT NOTICE. THE PRODUCTS DESCRIBED HEREIN AND THIS DOCUMENT ARE SUBJECT TO SPECIFIC DISCLAIMERS, SET FORTH AT www.vishay.com/doc?91000

ORDERING INFORMATION TABLE

Device code

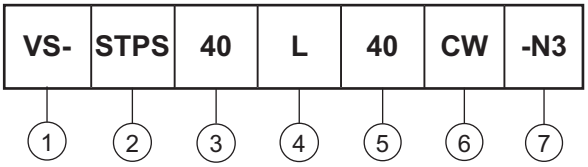

1 - Vishay Semiconductors product
2 - Schottky STPS series
3 - Current ratings (40 = 40 A)
4 - L = low forward voltage
5 - Voltage code (40 = 40 V)
6 - Package:
CW = TO-247
7 - Environmental digit
-N3 = halogen-free, RoHS-compliant, and totally lead (Pb)-free

ORDERING INFORMATION (Example)			
PREFERRED P/N	**QUANTITY PER T/R**	**MINIMUM ORDER QUANTITY**	**PACKAGING DESCRIPTION**
VS-STPS40L40CW-N3	25	500	Antistatic plastic tube

LINKS TO RELATED DOCUMENTS	
Dimensions	www.vishay.com/doc?96138
Part marking information	www.vishay.com/doc?95007

For technical questions within your region: DiodesAmericas@vishay.com, DiodesAsia@vishay.com, DiodesEurope@vishay.com
THIS DOCUMENT IS SUBJECT TO CHANGE WITHOUT NOTICE. THE PRODUCTS DESCRIBED HEREIN AND THIS DOCUMENT ARE SUBJECT TO SPECIFIC DISCLAIMERS, SET FORTH AT www.vishay.com/doc?91000

TO-247AC 3L

DIMENSIONS in millimeters and inches

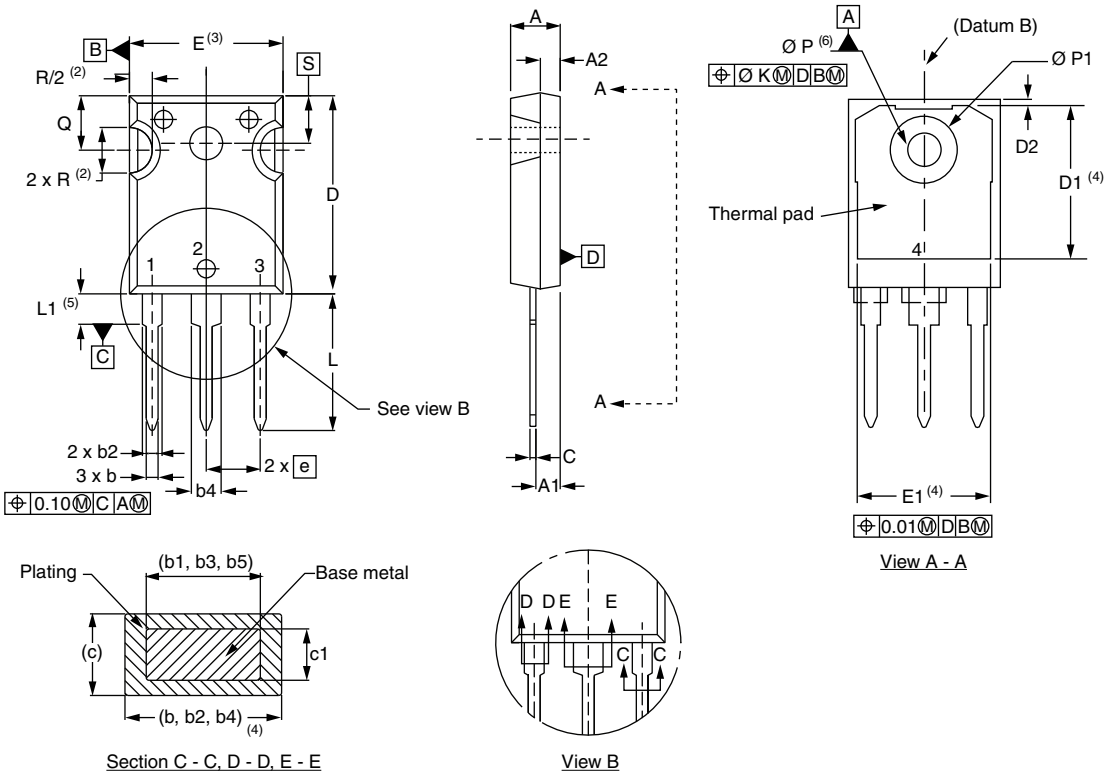

SYMBOL	MILLIMETERS		INCHES		NOTES
	MIN.	MAX.	MIN.	MAX.	
A	4.65	5.31	0.183	0.209	
A1	2.21	2.59	0.087	0.102	
A2	1.17	1.37	0.046	0.054	
b	0.99	1.40	0.039	0.055	
b1	0.99	1.35	0.039	0.053	
b2	1.65	2.39	0.065	0.094	
b3	1.65	2.34	0.065	0.092	
b4	2.59	3.43	0.102	0.135	
b5	2.59	3.38	0.102	0.133	
c	0.38	0.89	0.015	0.035	
c1	0.38	0.84	0.015	0.033	
D	19.71	20.70	0.776	0.815	3
D1	13.08	-	0.515	-	4

SYMBOL	MILLIMETERS		INCHES		NOTES
	MIN.	MAX.	MIN.	MAX.	
D2	0.51	1.35	0.020	0.053	
E	15.29	15.87	0.602	0.625	3
E1	13.46	-	0.53	-	
e	5.46 BSC		0.215 BSC		
Ø K	0.254		0.010		
L	14.20	16.10	0.559	0.634	
L1	3.71	4.29	0.146	0.169	
Ø P	3.56	3.66	0.14	0.144	
Ø P1	-	7.39	-	0.291	
Q	5.31	5.69	0.209	0.224	
R	4.52	5.49	0.178	0.216	
S	5.51 BSC		0.217 BSC		

Notes

(1) Dimensioning and tolerancing per ASME Y14.5M-1994

(2) Contour of slot optional

(3) Dimension D and E do not include mold flash. Mold flash shall not exceed 0.127 mm (0.005") per side. These dimensions are measured at the outermost extremes of the plastic body

(4) Thermal pad contour optional with dimensions D1 and E1

(5) Lead finish uncontrolled in L1

(6) Ø P to have a maximum draft angle of 1.5 to the top of the part with a maximum hole diameter of 3.91 mm (0.154")

(7) Outline conforms to JEDEC® outline TO-247 with exception of dimension Q

For technical questions within your region: DiodesAmericas@vishay.com, DiodesAsia@vishay.com, DiodesEurope@vishay.com

THIS DOCUMENT IS SUBJECT TO CHANGE WITHOUT NOTICE. THE PRODUCTS DESCRIBED HEREIN AND THIS DOCUMENT ARE SUBJECT TO SPECIFIC DISCLAIMERS, SET FORTH AT www.vishay.com/doc?91000

Disclaimer

ALL PRODUCT, PRODUCT SPECIFICATIONS AND DATA ARE SUBJECT TO CHANGE WITHOUT NOTICE TO IMPROVE RELIABILITY, FUNCTION OR DESIGN OR OTHERWISE.

Vishay Intertechnology, Inc., its affiliates, agents, and employees, and all persons acting on its or their behalf (collectively, “Vishay”), disclaim any and all liability for any errors, inaccuracies or incompleteness contained in any datasheet or in any other disclosure relating to any product.

Vishay makes no warranty, representation or guarantee regarding the suitability of the products for any particular purpose or the continuing production of any product. To the maximum extent permitted by applicable law, Vishay disclaims (i) any and all liability arising out of the application or use of any product, (ii) any and all liability, including without limitation special, consequential or incidental damages, and (iii) any and all implied warranties, including warranties of fitness for particular purpose, non-infringement and merchantability.

Statements regarding the suitability of products for certain types of applications are based on Vishay’s knowledge of typical requirements that are often placed on Vishay products in generic applications. Such statements are not binding statements about the suitability of products for a particular application. It is the customer’s responsibility to validate that a particular product with the properties described in the product specification is suitable for use in a particular application. Parameters provided in datasheets and / or specifications may vary in different applications and performance may vary over time. All operating parameters, including typical parameters, must be validated for each customer application by the customer’s technical experts. Product specifications do not expand or otherwise modify Vishay’s terms and conditions of purchase, including but not limited to the warranty expressed therein.

Except as expressly indicated in writing, Vishay products are not designed for use in medical, life-saving, or life-sustaining applications or for any other application in which the failure of the Vishay product could result in personal injury or death. Customers using or selling Vishay products not expressly indicated for use in such applications do so at their own risk. Please contact authorized Vishay personnel to obtain written terms and conditions regarding products designed for such applications.

No license, express or implied, by estoppel or otherwise, to any intellectual property rights is granted by this document or by any conduct of Vishay. Product names and markings noted herein may be trademarks of their respective owners.

© 2017 VISHAY INTERTECHNOLOGY, INC. ALL RIGHTS RESERVED