Wirewound Resistors, Industrial High Power, Vitreous Tubular

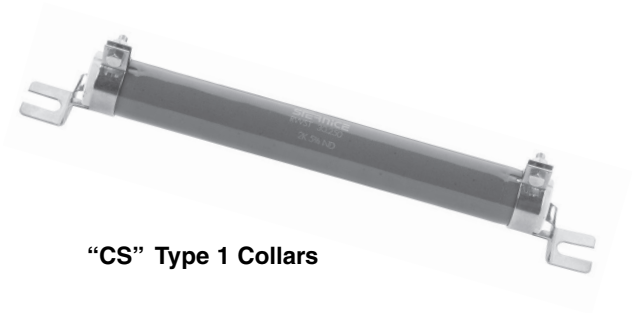

"CS" Type 1 Collars

FEATURES

- 95 W to 800 W at 25 °C
- NF C 93-214
- RB 25 x 168, RB 30 x 250
- Rugged construction for use in severe environmental conditions
- Material categorization: for definitions of compliance please see www.vishay.com/doc?99912

RoHS COMPLIANT

The RWST vitreous wirewound high power resistors are known for their excellent reliability which has developed out of the Vishay Sfernice experience over several decades in the field of high current applications.

Extremely severe conditions of use are encountered in electrical traction including repeated overloads. To withstand such conditions the new RWST model is extremely rugged and is manufactured to a very carefully monitored process using the best materials.

NF F 16101, 10/1988 and 16102, 04/1992: Not applicable (our parts are made of metallic and refractory materials).
NF C 93-214. Performances according to NF C 93-214.

DIMENSIONS in millimeters

STAINLESS STEEL 304 L COLLARS "CS" TYPE 1

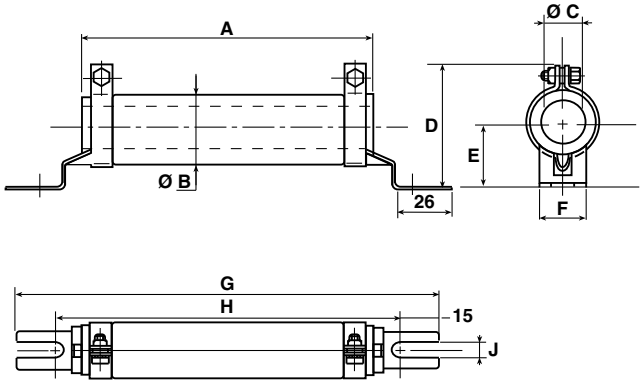

STAINLESS STEEL 304 L COLLARS "CS" TYPE 2

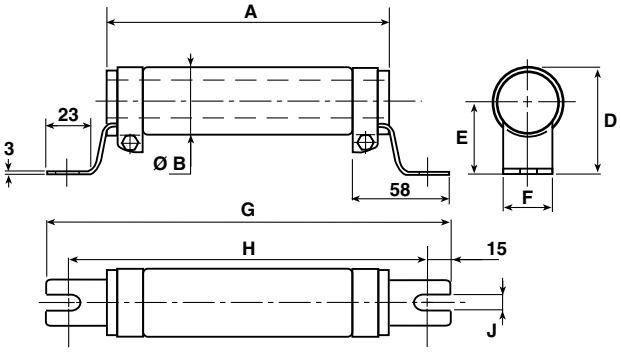

WELDED STAINLESS STEEL 304 L COLLARS "AN"

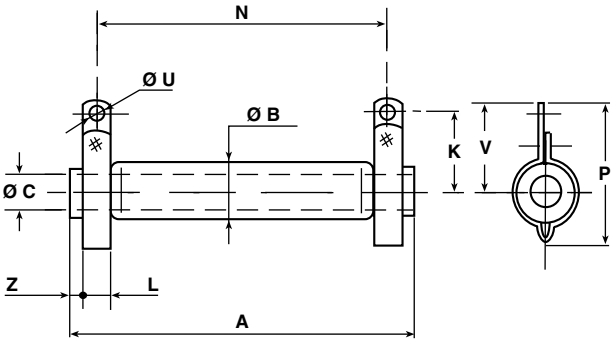

WELDED STAINLESS STEEL 304 L BAND "B"

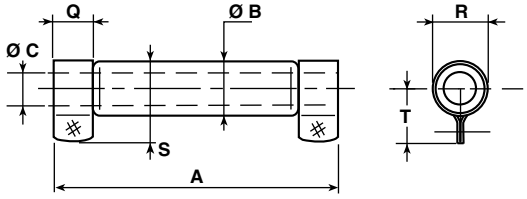

For technical questions, contact: sferfixedresistors@vishay.com

THIS DOCUMENT IS SUBJECT TO CHANGE WITHOUT NOTICE. THE PRODUCTS DESCRIBED HEREIN AND THIS DOCUMENT ARE SUBJECT TO SPECIFIC DISCLAIMERS, SET FORTH AT www.vishay.com/doc?91000

DIMENSIONS in millimeters

SERIES	CONNECTIONS	A ± 2	Ø B MAX.	Ø C MIN.	D	E	F ± 0.5	G - 4 + 0	H - 4 + 0	J ± 0.5	K	L + 0.5 + 0
RWST 25 x 138	AN-B CS type 1	138	28	12	50 ± 1.5	27 ± 1	24	199	169	6.5	28.5 ± 1	9
RWST 25 x 168	AN-B CS type 1	168	28	12	50 ± 1.5	27 ± 1	24	229	199	6.5	28.5 ± 1	9
RWST 30 x 250	AN-B CS type 1	250	33	17	60 ± 1.5	30 ± 1	25	317	287	9	31 ± 1	13
RWST 40 x 370	AN CS type 2	370	45	22	69 max.	45 ± 1.5	30	432	405	9	45 ± 1.5	18
RWST 50 x 373	AN CS type 2	373	53	27.1	80 max.	51 ± 1.5	30	432	405	9	51 ± 1.5	18

SERIES	CONNECTIONS	N ± 2	P	Q - 0 + 5	R - 0.3 + 0.9	S MAX.	T ± 1	Ø U	V	Z	AVERAGE UNIT WEIGHT IN g (CS collars)
RWST 25 x 138	AN-B CS type 1	117 ± 2	51.5 ± 1.5	15	26	38.5	23.5	5.7	33.5 ± 1	6	225
RWST 25 x 168	AN-B CS type 1	147 ± 2	50 ± 1.5	15	26	38.5	23.5	5.7	33.5 ± 1	6	250
RWST 30 x 250	AN-B CS type 1	227 ± 2	55 ± 1.5	18	31	43.5	26	5.7	36 ± 1	5	445
RWST 40 x 370	AN CS type 2	332 ± 3	81.5 max.	-	-	-	-	9.2	57 ± 1.5	10	1400
RWST 50 x 373	AN CS type 2	332 ± 3	92.5 max.	-	-	-	-	9.2	63 ± 1.5	11.5	2200

STANDARD ELECTRICAL SPECIFICATIONS

MODEL	SIZE	RESISTANCE RANGE Ω	RATED POWER $P_{25\,°C}$ W	TOLERANCE ± %
RWST 25 x 138	25138	2.7 to 82K	95	5
RWST 25 x 168	25168	2.7 to 100K	160	5
RWST 30 x 250	30250	4.7 to 220K	280	5
RWST 40 x 370	40370	8.2 to 360K	500	5
RWST 50 x 373	50373	12 to 390K	700	5

MECHANICAL SPECIFICATIONS

Mechanical Protection	Vitreous enamel
Resistive Element	Ni-Cr wire
Connections	CS supporting collars
AN Collar or B	on request
Average Unit Weight	225 g to 2200 g

ENVIRONMENTAL SPECIFICATIONS

Temperature Range	-55 °C +450 °C
Climatic Category	-55 °C / +200 °C / 56 days

TECHNICAL SPECIFICATIONS

Resistance Range	2.7 Ω to 430 kΩ (E12, E24 preferred series values)
Resistance Tolerance Standard	± 5 %
Power Rating	95 W to 800 W at 25 °C
Temperature Coefficient	75 ppm/°C (typical)
Shelf Life	0.1 % year (typical)

PERFORMANCE

TESTS		CONDITIONS	REQUIREMENTS	TYPICAL VALUES AND DRIFTS	
Short Time Overload		10 P_r during 5 s Voltage limited at < 5000 V	2 % or 0.05 Ω	0.5 %	
Climatic Sequence		-55 °C, +200 °C	2 % or 0.05 Ω Insulation resistance 100 MΩ	0.5 %	
Humidity (Steady State)		56 days 95 % relative humidity	3 % or 0.05 Ω Insulation resistance 100 MΩ	0.5 %	
Thermal Shock		Load at 100 % P_r followed by cold temperature exposure at -55 °C / 15'	2 % or 0.05 Ω	0.5 %	
Shock		Severity 50 A 9 shocks/each side	1 % or 0.05 Ω	0.25 %	
Vibration		Severity 55B	1 % or 0.05 Ω	0.25 %	
Terminal Strength	AN	Traction 40 Ncm	1 % or 0.05 Ω	0.5 %	
	B	Torque 60 Ncm			
Load Life		90' / 30' cycle 1000 h at P_r 25 °C	5 %	1000 h	1 %
				5000 h	2 %

For technical questions, contact: sferfixedresistors@vishay.com
THIS DOCUMENT IS SUBJECT TO CHANGE WITHOUT NOTICE. THE PRODUCTS DESCRIBED HEREIN AND THIS DOCUMENT ARE SUBJECT TO SPECIFIC DISCLAIMERS, SET FORTH AT www.vishay.com/doc?91000

SPECIAL FEATURES

RWST STYLE	25 x 138	25 x 168	30 x 250	40 x 370	50 x 373
Designation NF C 93-214	-	RB 25 x 168	RB 30 x 250	-	-
Maximum Power Rating at 25 °C	110 W	180 W	320 W	600 W	800 W
Ohmic Range (E12, E24 series)	2.7 Ω to 82 kΩ	2.7 Ω to 100 kΩ	4.7 Ω to 220 kΩ	8.2 Ω to 360 kΩ	12 Ω to 430 kΩ
Limiting Element Voltage	1400 V	1900 V	3000 V	4500 V	5000 V
Critical Resistance	18 kΩ	20 kΩ	30 kΩ	36 kΩ	30 kΩ

NON INDUCTIVE WINDING

For high frequencies, low self induction resistors are available with special windings. RWSTNI designation.

MODEL AND STYLE	RWSTNI 25 x 138	RWSTNI 25 x 168	RWSTNI 30 x 250	RWSTNI 40 x 370	RWSTNI 50 x 373
Ohmic Range (E12 series)	22 Ω 2.5 kΩ	22 Ω 4 kΩ	120 Ω 6.8 kΩ	120 Ω 8.2 kΩ	150 Ω 8.2 kΩ

POWER RATING

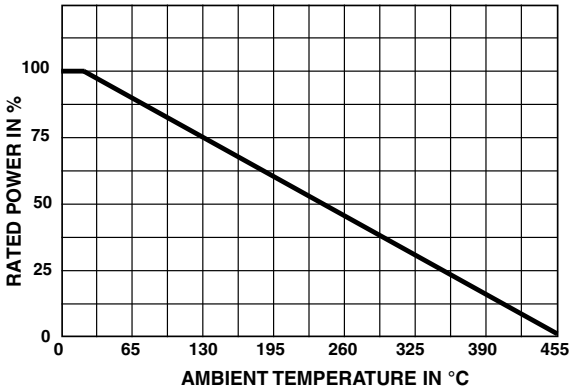

TEMPERATURE RISE

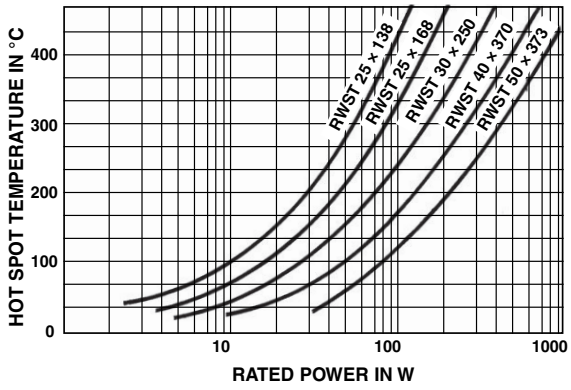

MARKING

Vishay Sfernice trademark, model, style, nominal resistance (in Ω), tolerance (in %), manufacturing date.

PACKAGING

Box: Fixed quantity depending on size and connections

ORDERING INFORMATION

RWST	25 x 138			B	56U	± 5 %	B06	e
MODEL	STYLE	NON-INDUCTIVE WINDING	SPECIAL DESIGN	CONNECTIONS	OHMIC VALUE	TOLERANCE	PACKAGING	LEAD (Pb)-FREE
		Optional	Optional		Custom items are subject to extra-charge and min. order. Please see price list.			

GLOBAL PART NUMBER INFORMATION

R	W	S	T	2	5	1	6	8	C		4	7	0	0	J	B	0	4			

GLOBAL MODEL	SIZE	LEADS	OPTION	OHMIC VALUE	TOLERANCE	PACKAGING	SPECIAL
RWST	**25 x 138** **25 x 168** **30 x 250** **40 x 370** **50 x 373**	**A** = AN **B** = B **C** = CS **F** = faston	**N** = non inductive winding	The first three digits are significant figures and the last digit specifies the number of zeros to follow. R designates decimal point. **4700** = 470 Ω **48R8** = 48.7 Ω **R010** = 0.01 Ω **R470** = 0.47 Ω	**J** = 5.0 %	**Box:** BO1 BO2 BO2NA BO4 BO4NA BO6 BO6NA	As applicable. Example: **BA7**

RELATED DOCUMENTS

APPLICATION NOTES	
Packaging Information	www.vishay.com/doc?50033

For technical questions, contact: sferfixedresistors@vishay.com
THIS DOCUMENT IS SUBJECT TO CHANGE WITHOUT NOTICE. THE PRODUCTS DESCRIBED HEREIN AND THIS DOCUMENT ARE SUBJECT TO SPECIFIC DISCLAIMERS, SET FORTH AT www.vishay.com/doc?91000

Disclaimer

ALL PRODUCT, PRODUCT SPECIFICATIONS AND DATA ARE SUBJECT TO CHANGE WITHOUT NOTICE TO IMPROVE RELIABILITY, FUNCTION OR DESIGN OR OTHERWISE.

Vishay Intertechnology, Inc., its affiliates, agents, and employees, and all persons acting on its or their behalf (collectively, “Vishay”), disclaim any and all liability for any errors, inaccuracies or incompleteness contained in any datasheet or in any other disclosure relating to any product.

Vishay makes no warranty, representation or guarantee regarding the suitability of the products for any particular purpose or the continuing production of any product. To the maximum extent permitted by applicable law, Vishay disclaims (i) any and all liability arising out of the application or use of any product, (ii) any and all liability, including without limitation special, consequential or incidental damages, and (iii) any and all implied warranties, including warranties of fitness for particular purpose, non-infringement and merchantability.

Statements regarding the suitability of products for certain types of applications are based on Vishay’s knowledge of typical requirements that are often placed on Vishay products in generic applications. Such statements are not binding statements about the suitability of products for a particular application. It is the customer’s responsibility to validate that a particular product with the properties described in the product specification is suitable for use in a particular application. Parameters provided in datasheets and / or specifications may vary in different applications and performance may vary over time. All operating parameters, including typical parameters, must be validated for each customer application by the customer’s technical experts. Product specifications do not expand or otherwise modify Vishay’s terms and conditions of purchase, including but not limited to the warranty expressed therein.

Except as expressly indicated in writing, Vishay products are not designed for use in medical, life-saving, or life-sustaining applications or for any other application in which the failure of the Vishay product could result in personal injury or death. Customers using or selling Vishay products not expressly indicated for use in such applications do so at their own risk. Please contact authorized Vishay personnel to obtain written terms and conditions regarding products designed for such applications.

No license, express or implied, by estoppel or otherwise, to any intellectual property rights is granted by this document or by any conduct of Vishay. Product names and markings noted herein may be trademarks of their respective owners.