VT-803-0052-24M5760000

Temperature Compensated Crystal Oscillator



Description

Vectron's VT-803-0052-24M57600000 Temperature Compensated Crystal Oscillator (TCXO) is a quartz stabilized, CMOS output, 5th order analog temperature compensated oscillator, operating off a 3.3 volt supply in a hermetically sealed 3.2 x 5.0 mm ceramic package.

Features

- 24.576MHz Output Frequency
- ±4.6ppm accuracy over all conditions including 20 years aging
- 280ppb temperature stability over -40/85 °C
- Fundamental Crystal Design with CMOS output
- Stratum 3 Compliant
- Gold over nickel contact pads
- Hermetically Sealed Ceramic SMD package
- Product is compliant to RoHS directive and fully compatible with lead free assembly

Block Diagram

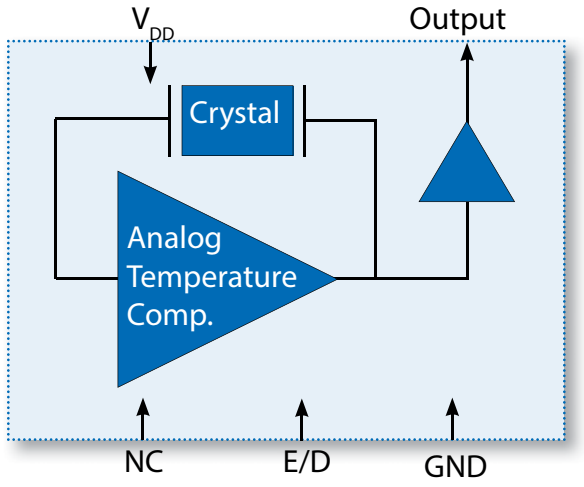

Specifications

Table 1. Electrical Performance

Parameter	Symbol	Min.	Typ	Max	Units
Output Frequency	f_O		24.576		MHz
Supply Voltage[1]	V_{DD}	3.135	3.3	3.465	V
Supply Current	I_{DD}			3.5	mA
Operating Temperature	T_{OP}	-40		85	°C
Frequency Stability					
Stability Over T_{OP}[2]	F_{STAB}			0.280	ppm
Initial Accuracy[3]	F_{TOL}			±1.5	ppm
Frequency Slope				±0.05	ppm/ °C
Power Supply Stability, ±5% change	F_{SUP}			±0.05	ppm
Load Stability	F_{LOAD}			±0.10	ppm
Holdver Stability at Constant Temperature[4], 1 day				±0.01	ppm
Holdover Stability[5]				±0.37	ppm
Overall Frequency Stability[6]				±4.6	ppm
RF Output (CMOS)					
Output Level High Output Level Low	V_{OH} V_{OL}	$0.9*V_{DD}$		 $0.1*V_{DD}$	V V
Output Load[7]	C_L	13.5	15	16.5	pF
Duty Cycle		45		55	%
Start Up Time	T_{SUP}			2	ms
Rise / Fall Times	t_R / t_F			5	ns
Output Enable Output Disable	V_{IH} V_{IL}	$0.7*V_{DD}$		 $0.3*V_{DD}$	V V
Phase Noise					
Phase Noise[8], 24.576MHz 10Hz 100Hz 1kHz 10kHz 100kHz			 -81 -107 -129 -153 -157		dBc/Hz
Phase Jitter[8] (12k-5MHz)			0.28		ps

1. The VT-803 power supply pin should be filtered, eg, a 0.1 and 0.01uf capacitor
2. (Fmax+Fmin)/2 value over the operating temperature range.
3. Measured at 25 °C.
4. Constant temperature = ± 1 C, after 1 day of power on.
5. Over operating temperature range for 24 hours after 7 days of continuous operation.
6. Includes calibration @ 25 °C, supply voltage, load, reflow, 20 year aging and frequency stability over temperature.
7. The total load on the output in the application should be 15 pF, for best Top stability.
8. Measured using E5052 Signal Source Analyzer.

Phase Noise

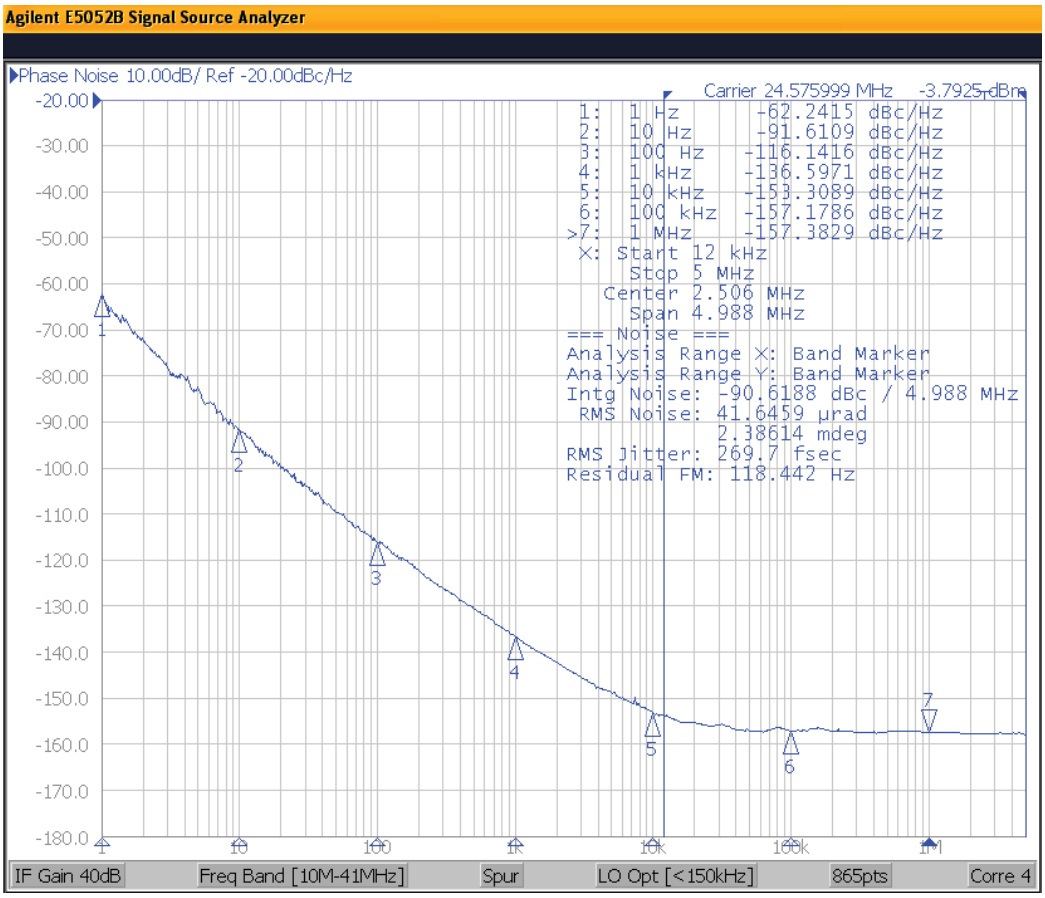

Package Outine Drawing

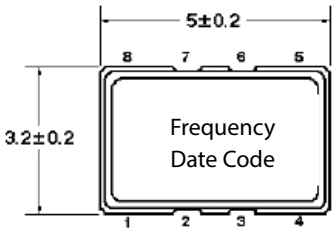

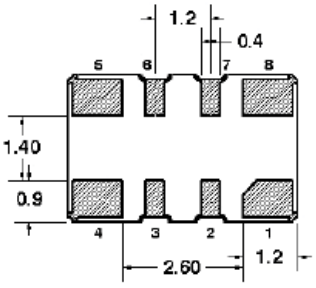

Dimensions in mm



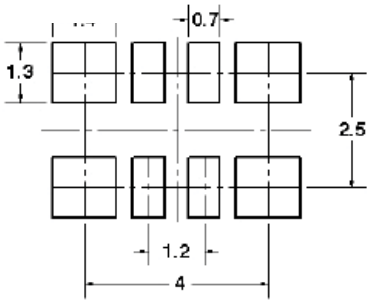

Table 2. Pinout

Pin #	Symbol	Function
1	NC	No Connection
2	NC	Make No Connection
3	NC	Make No Connection
4	GND	Ground
5	OUT	RF Output
6	E/D	Enable / Disable
7	NC	Make No Connection
8	V_{DD}	Supply Voltage

Maximum Ratings

Absolute Maximum Ratings and Handling Precautions

Stresses in excess of the absolute maximum ratings can permanently damage the device. Functional operation is not implied or any other excess of conditions represented in the operational sections of this data sheet. Exposure to absolute maximum ratings for extended periods may adversely affect device reliability.

Although ESD protection circuitry has been designed into the VT-803, proper precautions should be taken when handling and mounting, Vectron employs a Human Body Model and Charged Device Model for ESD susceptibility testing and design evaluation.
ESD thresholds are dependent on the circuit parameters used to define the model. Although no industry standard has been adopted for the CDM a standard resistance of 1.5kOhms and capacitance of 100pF is widely used and therefor can be used for comparison purposes.

Table 3. Maximum Ratings

Parameter	Symbol	Rating	Unit
Storage Temperature	T_{STORE}	-55/125	°C
Supply Voltage	V_{DD}	-0.6 to 6.0	V
Control Voltage	V_C	0/V_{DD}	V
ESD, Human Body Model	HBM	1500	V
ESD, Charged Device Model	CDM	1000	V

Table 4. Environmental Compliance

Parameter	Condition
Mechanical Shock	MIL-STD-883 Method 2002
Mechanical Vibration	MIL-STD-883 Method 2007
Temperature Cycle	MIL-STD-883 Method 1010
Solderability	MIL-STD-883 Method 2003
Fine and Gross Leak	MIL-STD-883 Method 1014
Resistance to Solvents	MIL-STD-883 Method 2015
Moisture Sensitivity Level	MSL1
Contact Pads	Gold (0.3-1.0um) over Nickel
Weight	70 mg
ThetaJC (bottom of case)	6 °C/W

IR Reflow

Suggested IR Profile

Devices are built using lead free epoxy and can be subjected to standard lead free IR reflow conditions shown in Table 5. Contact pads are gold over nickel and lower maximum temperatures can also be used, such as 220C.

Table 5. Reflow Profile

Parameter	Symbol	Value
PreHeat Time Ts-min Ts-max	t_s	200 sec Max 150°C 200°C
Ramp Up	R_{UP}	3°C/sec Max
Time above 217C	t_L	150 sec Max
Time to Peak Temperature	$t_{25C\ to\ peak}$	480 sec Max
Time at 260C	t_P	10 sec Max
Time at 240C	t_{P2}	60 sec Max
Ramp down	R_{DN}	6°C/sec Max

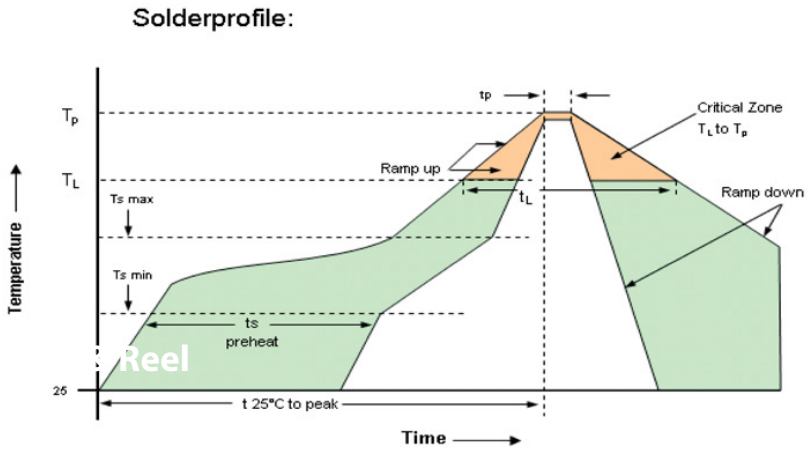

Tape & Reel Information

Table 6. Tape and Reel Information

Tape Dimensions (mm)					Reel Dimensions (mm)							
W	F	Do	Po	P1	A	B	C	D	N	W1	W2	#/Reel
12	5.5	1.5	4	8	254	2.5	13	21	100	13.5	17.5	1000

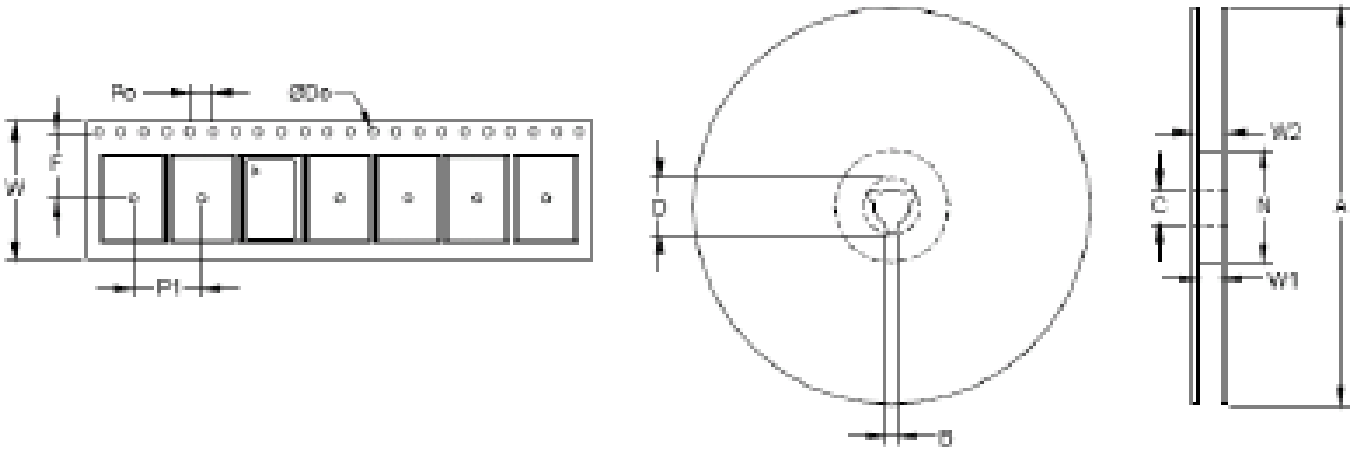

Ordering Information

VT-803- 0052- 24M5760000

Product
TCXO

Package
5.0x3.2mm Ceramic

Source Control Drawing

Frequency in MHz

Revision History

Revision Date	Approved	Description
Jan 30, 2019	FB	Rev 0.1 - Initial datasheet
July 29, 2019	FB	Update Contact Information

Contact Information

USA:
100 Watts Street
Mt Holly Springs, PA 17065
Tel: 1.717.486.3411
Fax: 1.717.486.5920

Europe:
Landstrasse
74924 Neckarbischofsheim
Germany
Tel: +49 (0) 7268.801.0
Fax: +49 (0) 7268.801.281

Vectron™ a Microchip company

Information contained in this publication regarding device applications and the like is provided only for your convenience and may be superseded by updates. It is your reasonability to ensure that your application meets with your specifications. MICROCHIP MAKES NO REPRESENTATION OR WARRANTIES OF ANY KIND WHETHER EXPRESS OR IMPLIED, WRITTEN OR ORAL, STATUTORY OR OTHERWISE, RELATED TO THE INFORMATION INCLUDING, BUT NOT LIMITED TO ITS CONDITION, QUALITY, PERFORMANCE, MERCHANTABILITY OR FITNESS FOR PURPOSE. Microchip disclaims all liability arising from this information and its use. Use of Microchip devices in life support and/or safety applications is entirely at the buyer's risk, and the buyer agrees to defend, indemnify and hold harmless Microchip from any and all damages, claims, suits, or expenses resulting from such use. No licenses are conveyed, implicitly, or otherwise, under any Microchip intellectual property rights unless otherwise stated.

Trademarks
The Microchip and Vectron names and logos are registered trademarks of Microchip Technology Incorporated in the U.S.A. and other countries.