DO NOT SCALE
DIMENSIONS IN mm

METRIC

THIRD ANGLE PROJECTION

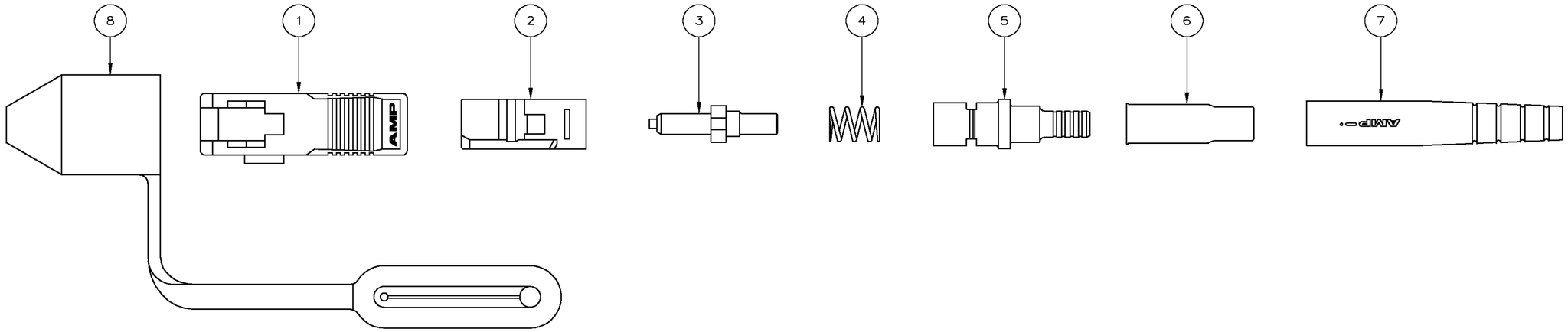

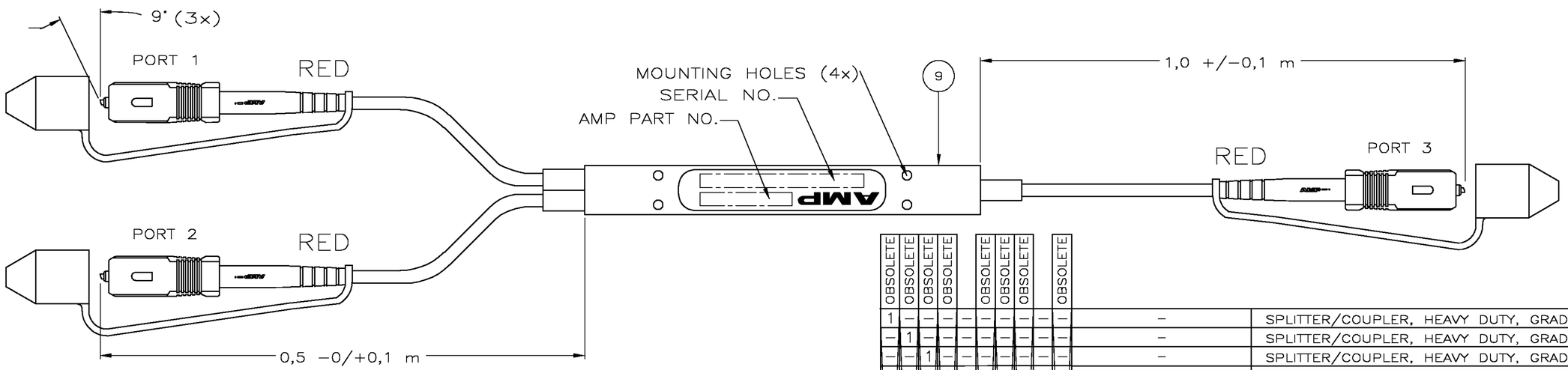

NOTES:

1 INSERTION LOSS: ≤ IL MAX+0,5dB, MEASURED FROM : – PORT 3 TO PORT 1
– PORT 1 TO PORT 3
– PORT 2 TO PORT 3
AND MEASURED ACC. IEC 875–1 METHOD 3, AGAINST REF.CONN.

2 RETURN LOSS :
SC/APC CONNECTOR : ≥ 70 dB, MATED

3 BANDPASS: 1310/1550 ±20 nm

4 ANGLE= 9 DEGREES

5 TUNED CONNECTORS

9–1206444–1	8–1206444–1	7–1206444–1	6–1206444–1	5–1206444–1	4–1206444–1	3–1206444–1	2–1206444–1	1–1206444–1	0–1206444–1	PART NUMBER	DESCRIPTION	ITEM
OBSOLETE	OBSOLETE	OBSOLETE	OBSOLETE		OBSOLETE	OBSOLETE	OBSOLETE		OBSOLETE	–	SPLITTER/COUPLER, HEAVY DUTY, GRADE A 85/15	9
1	–	–	–	–	–	–	–	–	–	–	SPLITTER/COUPLER, HEAVY DUTY, GRADE A 95/05	9
–	1	–	–	–	–	–	–	–	–	–	SPLITTER/COUPLER, HEAVY DUTY, GRADE A 90/10	9
–	–	1	–	–	–	–	–	–	–	–	SPLITTER/COUPLER, HEAVY DUTY, GRADE A 80/20	9
–	–	–	1	–	–	–	–	–	–	–	SPLITTER/COUPLER, HEAVY DUTY, GRADE A 75/25	9
–	–	–	–	1	–	–	–	–	–	–	SPLITTER/COUPLER, HEAVY DUTY, GRADE A 70/30	9
–	–	–	–	–	1	–	–	–	–	–	SPLITTER/COUPLER, HEAVY DUTY, GRADE A 65/35	9
–	–	–	–	–	–	1	–	–	–	–	SPLITTER/COUPLER, HEAVY DUTY, GRADE A 60/40	9
–	–	–	–	–	–	–	1	–	–	–	SPLITTER/COUPLER, HEAVY DUTY, GRADE A 55/45	9
–	–	–	–	–	–	–	–	1	–	–	SPLITTER/COUPLER, HEAVY DUTY, GRADE A 50/50	9
3	3	3	3	3	3	3	3	3	3	–	CAP, PROTECTIVE (STRAP TYPE)	8
3	3	3	3	3	3	3	3	3	3	–	STRAIN RELIEF PUSH–ON, RED	7
3	3	3	3	3	3	3	3	3	3	–	CRIMP EYELET OPTIMATE	6
3	3	3	3	3	3	3	3	3	3	–	INTERNAL BODY SC	5
3	3	3	3	3	3	3	3	3	3	–	SPRING COMPRESSION	4
3	3	3	3	3	3	3	3	3	3	–	FERR. SUBASSY SC SM 0,125/1,1	3
3	3	3	3	3	3	3	3	3	3	–	PLUG BODY SC GREY	2
3	3	3	3	3	3	3	3	3	3	–	CONNECTOR HOUSING AMP SC1 GREEN	1
QTY	QTY	QTY	QTY	QTY	QTY	QTY	QTY	QTY	QTY			

LTR.	REVISION RECORD	DR.	CHK.	DATE
–	–	–	–	–
–	–	–	–	–
–	–	–	–	–
–	–	–	–	–
–	–	–	–	–
A	EH02–0036–04	SG	JvE	05 MAR 04
0	EH–0174–98	MVDM	DS	06 FEB 98

CUSTOMER DRAWING FOR REFERENCE ONLY WILL NOT BE UPDATED

© COPYRIGHT 19 – BY AMP–HOLLAND B.V.
ALL INTERNATIONAL RIGHTS RESERVED.AMP PRODUCTS MAY BE COVERED BY U.S. AND FOREIGN AND/OR PATENTS PENDING.

THIS DRAWING IS UNPUBLISHED
~~RELEASED FOR PUBLICATION ,19~~

AMP–HOLLAND B.V.
's–Hertogenbosch,
The Netherlands.

NAME
1x2 SPITTER/COUPLER, 3,0 mm, HD
WITH 3x SC/APC CONNECTOR, TUNED

DR.: M.V.D.MEER DATE: 06 FEB 98
CHK.: J.v. EEUWIJK DATE:
DS J.v. EEUWIJK DATE:

DWG.No. C–1206444
REV.LTR. A
SHEET 1 OF 1
A2

R6–129 (REV.04–91)