THIS DRAWING IS UNPUBLISHED. RELEASED FOR PUBLICATION 20
© COPYRIGHT 20 BY - ALL RIGHTS RESERVED.

LOC	DIST
CM	00

REVISIONS

P	LTR	DESCRIPTION	DATE	DWN	APVD
	H2	REVISED PER ECR-15-014633	12OCT2015	SC	DZ
	H3	ECN-25-354600	25NOV2025	CK	MK

1 AMP LOGO AND CAVITY NUMBER LOCATED ON EITHER SURFACE.

2 CIRCUIT NUMBER LOCATED ON EITHER SURFACE.

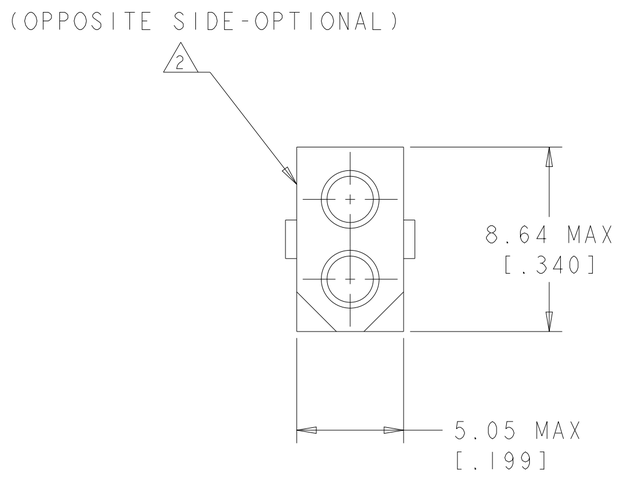

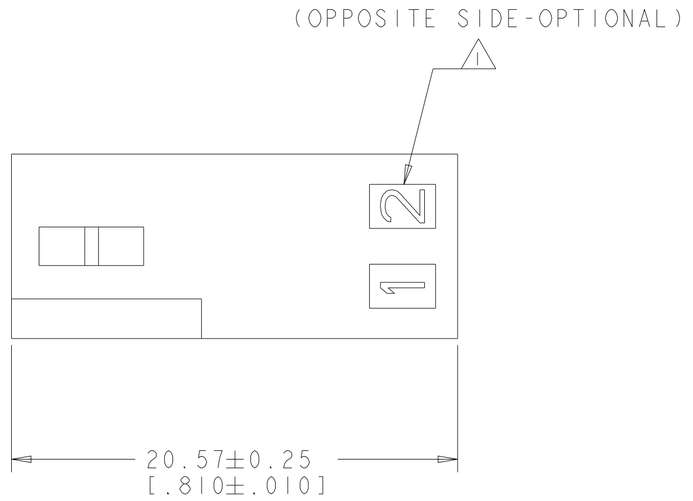

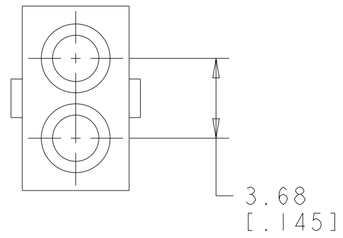

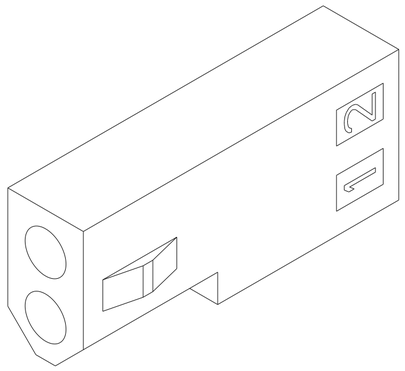

OBSOLETE	0.035 IN^3	BLACK	770342-3
	0.035 IN^3	NATURAL	770342-1
	VOLUME	COLOR	PART NUMBER

METRIC

THIS DRAWING IS A CONTROLLED DOCUMENT.

DIMENSIONS: mm[INCHES]

TOLERANCES UNLESS OTHERWISE SPECIFIED:
0 PLC ± -
1 PLC ± -
2 PLC ± 0.13 [.005]
3 PLC ± -
4 PLC ± -
ANGLES ± -

MATERIAL: NYLON, UL94V-2
FINISH: -

DWN K. WHITAKER 22MAY2007
CHK C. CASH 22MAY2007
APVD C. CASH 22MAY2007
PRODUCT SPEC: -
APPLICATION SPEC: -
WEIGHT: -

TE Connectivity

NAME: RECEPTACLE, 2 CIRCUIT, .062 PIN AND SOCKET

SIZE	CAGE CODE	DRAWING NO	RESTRICTED TO
A2	00779	C- 770342	-

CUSTOMER DRAWING | SCALE 5:1 | SHEET 1 OF 1 | REV H3