© – TE Connectivity. All Rights Reserved.

REVISIONS					
P	LTR	DESCRIPTION	DATE	DWN	APVD
	D2	REVISED PER ECR-25-255998	15SEP2025	SA	DSC

1 FOR .080 TO .120 WIRE INSULATION DIA.

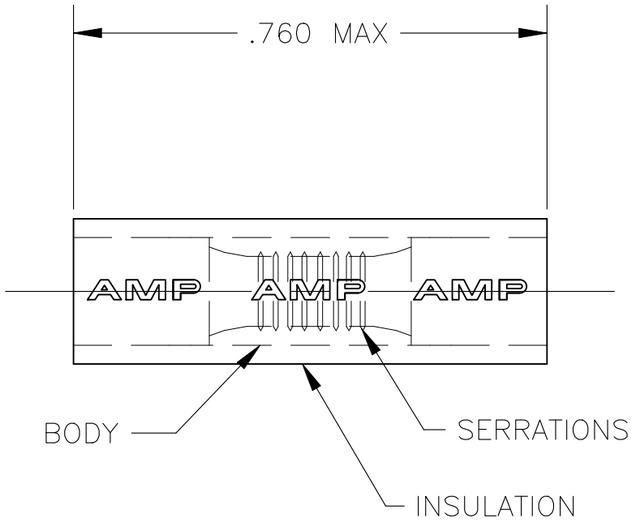

1 KIT = 250 PIECES	LOOSE PIECE	INSULATION: PVC COLOR: RED BODY: COPPER (QQ-C-576) TIN PLATE PER ASTM B-545	6-34131-0
1	WIRE SPLICE		34131
QTY	PART NO	MATERIAL / FINISH	PART NO

THIS DRAWING IS A CONTROLLED DOCUMENT.

DIMENSIONS: INCHES

TOLERANCES UNLESS OTHERWISE SPECIFIED:
0 PLC ± –
1 PLC ± –
2 PLC ± –
3 PLC ± .005
4 PLC ± –
ANGLES ± 1°

MATERIAL: SEE TABLE

FINISH: SEE TABLE

DWN	05SEP03 jr ruth
CHK	05SEP03 T MICHIELUTTI
APVD	05SEP03 T MICHIELUTTI
PRODUCT SPEC	—
APPLICATION SPEC	—
WEIGHT	—

TE Connectivity

NAME
WIRE SPLICE, PARALLEL,
PLASTI-GRIP, WIRE SIZE: 22-16 AWG
—

SIZE	CAGE CODE	DRAWING NO	RESTRICTED TO
A3	00779	C-34131	—

CUSTOMER DRAWING

SCALE	SHEET	REV
4:1	1 OF 1	D2