THIS DRAWING IS UNPUBLISHED. RELEASED FOR PUBLICATION -,- .
© COPYRIGHT - By - ALL RIGHTS RESERVED.

| LOC | DIST |
|---|---|
| AF | 50 |

REVISIONS

| P | LTR | DESCRIPTION | DATE | DWN | APVD |
|---|---|---|---|---|---|
| | L2 | REV PER ECR-25-256719 | 26-09-25 | AG | BW |

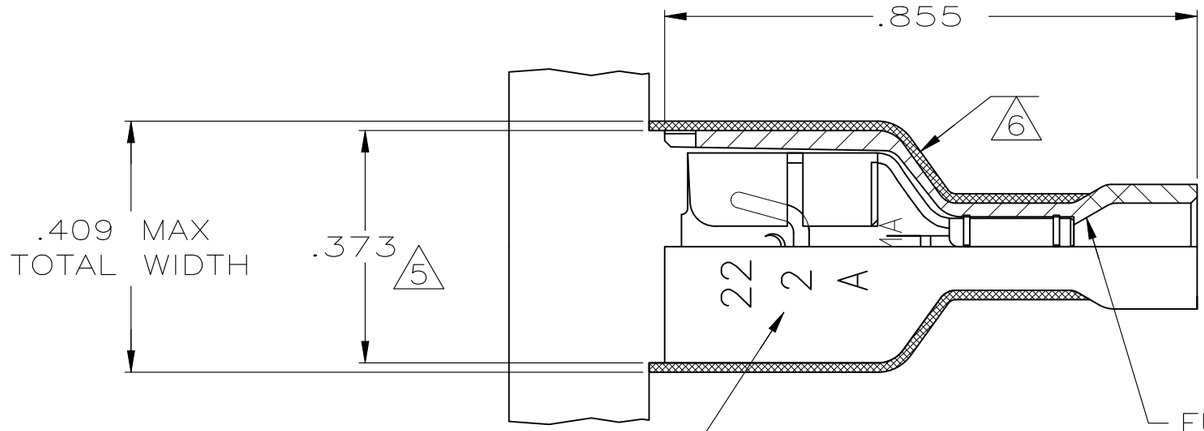


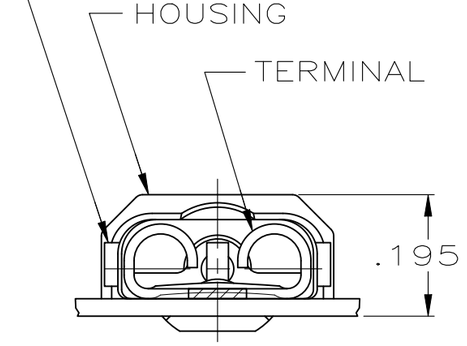


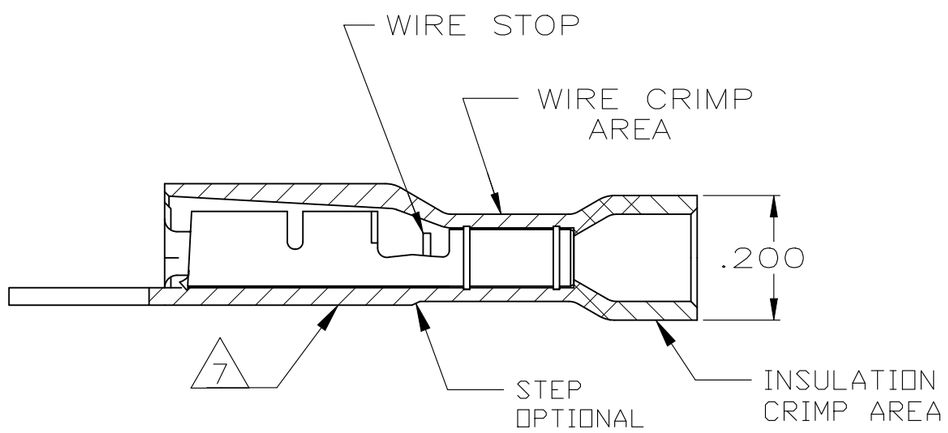


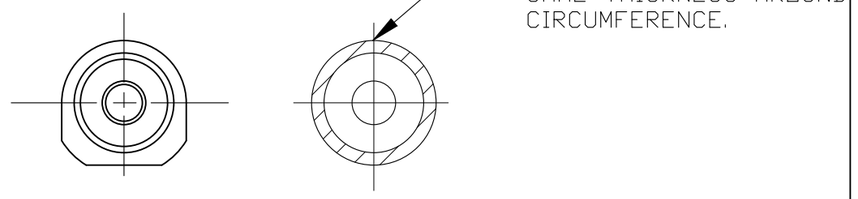


1 MATES WITH .032±.001x.250 TAB

2 WIRE STRIP LENGTH .281

3 INSULATION SIZE .060-.135 DIA

4 CONTINUOUS STRIP ON REELS

5 DIMENSION DOES NOT INCLUDE TRIM BURR

6 .015 MAX CARRIER TRIM BURR PER SIDE IS ALLOWABLE IN THE SHADED AREA

7 MOLD GATE LOCATED IN THIS AREA. GATE AREA MAY BE DISCOLORED WITH A SLIGHT DIMPLE.

| | |
|---|---|
| HOUSING:NYLON,COLOR-RED TRANSLUCENT<br>RECEPTACLE: BRASS,TIN | 2-520405-2 |
| MATERIAL & FINISH | PART NO |

THIS DRAWING IS A CONTROLLED DOCUMENT.

DIMENSIONS: INCHES

TOLERANCES UNLESS OTHERWISE SPECIFIED:
0 PLC ± -
1 PLC ± -
2 PLC ± -
3 PLC ± .015
4 PLC ± -
ANGLES ± -

MATERIAL: SEE TABLE

FINISH: SEE TABLE

| | |
|---|---|
| DWN | P FORTNEY 10/26/88 |
| CHK | MS FEHER 11/3/88 |
| APVD | K RANDOLPH 11/4/88 |
| PRODUCT SPEC | 108-2044 |
| APPLICATION SPEC | 114-2123 |
| WEIGHT | - |

TE Connectivity

NAME: RECEPTACLE ASSY,ULTRA-FAST PLUS, .250 SERIES,22-18 AWG -

| SIZE | CAGE CODE | DRAWING NO | RESTRICTED TO |
|---|---|---|---|
| A3 | 00779 | C-520405 | - |

CUSTOMER DRAWING

| SCALE | SHEET | REV |
|---|---|---|
| 4:1 | 1 OF 1 | L2 |