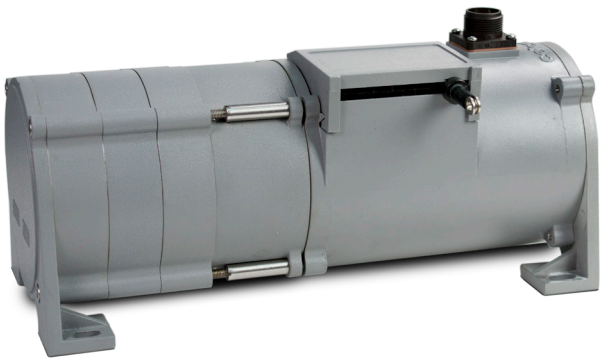

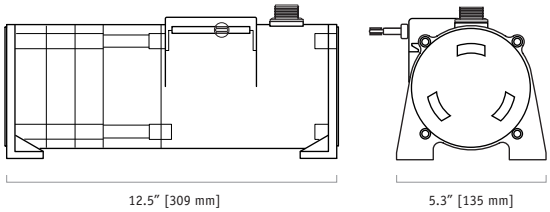

PT9420 (Extended Range)

Cable Actuated Sensor
Extended Ranges • 4..20 mA • 0..20mA

Absolute Linear Position to 1700 inches (43 meters)

Aluminum or Stainless Steel Enclosure Options

VLS Option to Prevent Free-Release Damage

IP68 / NEMA 6 • Hazardous Area Certification

The PT9420 is a great value for demanding long-range applications requiring a 4 - 20 mA linear position feedback signal. Sealed to meet NEMA 4 standards, this Cable-Extension Transducer will perform even under the harshest of environmental conditions.

As a member of our innovative family of NEMA-4 rated cable-extension transducers, the PT9420 offers numerous benefits. It installs in minutes, functions properly without perfectly parallel alignment, and when its cable is retracted, it measures only 6".

Output Signal

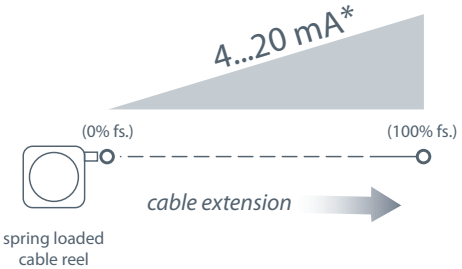

**Optional 3-wire, 0...20mA output signal available.*

GENERAL

Full Stroke Range Options	0-600 to 0-1700 in. (on this data sheet)
Output Signal Options	4...20 mA (2-wire) and 0...20 mA (3-wire)
Accuracy	± 0.12% full stroke
Repeatability	± 0.05% full stroke
Resolution	essentially infinite
Measuring Cable Options	stainless steel or thermoplastic
Enclosure Material	powder-painted aluminum or 303 stainless steel
Sensor	plastic-hybrid precision potentiometer
Potentiometer Cycle Life	≥ 250,000
Max. Retraction Acceleration	see ordering information
Max. Velocity	see ordering information
Weight, Aluminum Enclosure	14 lbs. max.
Weight, Stainless Steel Enclosure	28 lbs, max.

ELECTRICAL

Input Voltage	see ordering information
Input Current	20 mA max.
Maximum Loop Resistance (Load)	(loop supply voltage – 8)/0.020
Circuit Protection	38 mA max.
Impedance	100M ohms @ 100 VDC, min.
Output Signal, Zero Adjust	up to 50% of full stroke range
Output Signal, Span Adjust	to 50% of factory set span

ENVIRONMENTAL

Enclosure	NEMA 4/4X/6, IP 67/68
Hazardous Area Certification	see ordering information
Operating Temperature	-40° to 200°F (-40° to 90°C)
Vibration	up to 10 g to 2000 Hz maximum
Thermal Effects, Zero	0.01% f.s./°F, max.
Thermal Effects, Span	0.01%/°F, max.

EMC COMPLIANCE PER DIRECTIVE 89/336/EEC

Emission / Immunity	EN50081-2 / EN50082-2

Outline Drawing

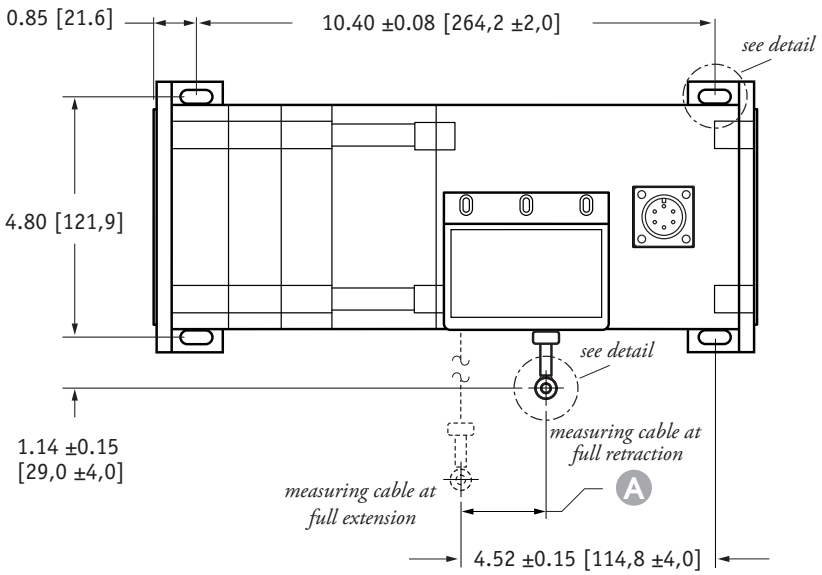

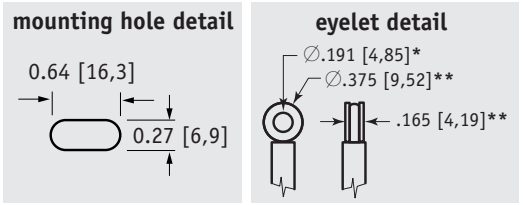

A DIMENSION

RANGE	inches [mm]
600	1.76 [44,7]
800	1.58 [40,1]
1000	1.98 [50,2]
1200	1.98 [50,2]
1500	1.86 [47,2]
1700	2.11 [53,6]

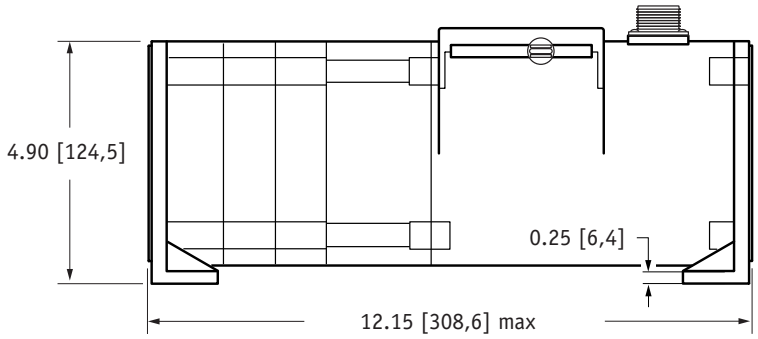

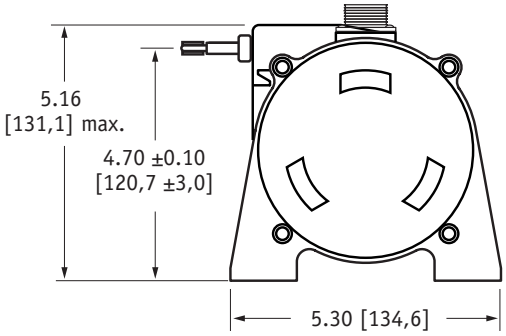

DIMENSIONS ARE IN INCHES [MM]
tolerances are 0.03 IN. [0.5 MM] unless otherwise noted.

* tolerance = +.005 –.001 [+.13 –.03]
** tolerance = +.005 –.005 [+.13 –.13]

Ordering Information:

Model Number:

PT9420-_____ - __ __ __ - 1 __ __ 0
order code: Ⓡ Ⓐ Ⓑ Ⓒ Ⓓ Ⓔ Ⓕ Ⓖ

Sample Model Number:

PT9420 - 1200 - 111 - 1110

Ⓡ	range:	1200 inches
Ⓐ	enclosure/cable tension:	aluminum
Ⓑ	measuring cable:	nylon-coated stainless
Ⓒ	cable exit:	front
Ⓔ	output signal:	4...20 mA, 2-wire
Ⓕ	electrical connection:	6-pin plastic connector

Full Stroke Range:

Ⓡ order code:	0600	0800	1000	1200	1500	1700
full stroke range, min:	600 in.	800 in.	1000 in.	1200 in.	1500 in.	1700 in.
cable tension (±35%):	27 oz.	24 oz.	20 oz.	19 oz.	18 oz.	17 oz.

Enclosure Material:

Ⓐ order code:	1	3
enclosure material:	powder-painted aluminum	303 stainless steel
max. acceleration:	1g	1g
max. velocity:	60 inches/sec.	60 inches/sec.

Measuring Cable:

Ⓑ order code:	1	2
cable construction:	nylon-coated stainless steel rope*	bare stainless steel rope*
general use:	*indoor*	*outdoor, debris, high temperature*

**cable diameter:*

stroke range:	0600	0800	1000	1200	1500	1700
nylon-coated stainless:	.034 in.	.019 in.	.019 in.	.019 in.	.014 in.	.014 in.
bare stainless:	.031 in.	.018 in.	.018 in.	.018 in.	.015 in.	.015 in.

Cable Exit:

Ⓒ order code:	1	2	3	4
	front	top	back	down

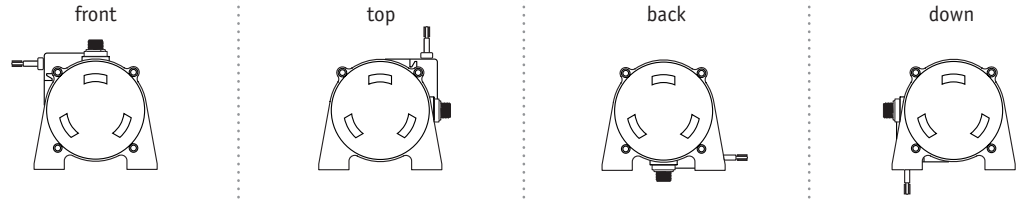

Output Signals:

Ⓔ order code:	1	2	3	4	5*	6*
output signal options:	4...20 mA (4 → 20)	20...4 mA (20 → 4)	0...20 mA (0 → 20)	20...0 mA (20 → 0)	4...20 mA (4 → 20)	20...4 mA (20 → 4)
sensitivity:	16 mA/full stroke ±0.25%		20 mA/full stroke ±0.25%		16 mA/full stroke ±0.25%	
wiring configuration:	2 – wire		3 – wire		2 – wire	
input voltage:	8 – 34 vdc		14 – 29 vdc		14 – 32 vdc	
hazardous area certification:	not certified				CSA • Cenelec	

Output Signal Example:

ordercode = **1** = 4...20 mA ➡

4 mA =

20 mA =

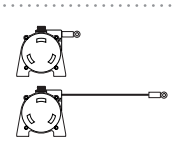

Hazardous Area Certifications:

CSA Standard 22.2
Class 1
Groups A, B, C and D

Cenelec
LCIE EEx
ia IIc T4

**IMPORTANT: intrinsically safe when powered from a CSA certified zener barrier rated 28 VDC max, 110 mA max per installation drawing#677984*

Ordering Information (cont.):

Electrical Connection:

order code:	1	2	3	4
	6-pin plastic connector w/mating plug	10-ft. [3 M] waterproof cable	6-pin metal connector w/mating plug	25-ft. [7.5 M] instrumentation cable
	IP 67, NEMA 4X,6**	**IP 67, NEMA 4X**, 6**	**IP 65, NEMA 4**	**IP 67, NEMA 6**
	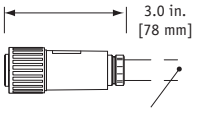	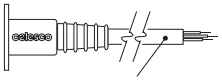	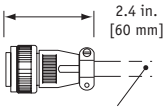	
	1/2 - 5/16" [14 - 8 mm] cable dia. 16 AWG max conductor size connector: MS3102E-14S-6P mating plug: MS3106E-14S-6S	10 ft. x 0.4-in. dia. [3 M x 10 mm dia.] 18 AWG, type SJTOW	3/8-in. [9 mm] max cable dia. 16 AWG max conductor size connector: MS3102E-14S-6P mating plug: MS3106E-14S-6S	25 ft. x 0.2-in. dia. [7,5 M x 5 mm dia.] 24 AWG, shielded

order code:	5	6	7
	100-ft. [30 M] waterproof cable	10-ft. [3 M] **pressure tested*** waterproof cable	100-ft. [30 M] **pressure tested*** waterproof cable
	IP 67, NEMA 4X,6**	**IP 68, NEMA 4X**, 6P**	**IP 68, NEMA 4X**, 6P**
	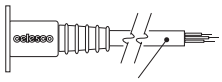	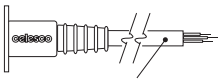	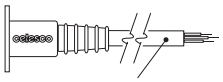
	100 ft. x 0.4-in. dia. [30 M x 10 mm dia.] 18 AWG, type SJTOW	10 ft. x 0.4-in. dia. [3 M x 10 mm dia.] 18 AWG, type SJTOW	100 ft. x 0.4-in. dia. [30 M x 10 mm dia.] 18 AWG, type SJTOW

6-pin Mating Plug

pin	2-wire	3-wire
A	8...34 vdc***	14...29 vdc
B	4...20 mA out	common
C	–	0...20 mA out
D	case ground	–

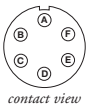

contact view

Waterproof Cable

color code	2-wire	3-wire
WHITE	8...34 vdc***	14...29 vdc
BLACK	4...20 mA out	common
GREEN	case ground	0...20 mA out

Instrumentation Cable

color code	2-wire	3-wire
RED	8...34 vdc***	14...29 vdc
BLACK	4...20 mA out	common
WHITE	n/a	n/a
GREEN	case ground	0...20 mA out

Notes:
* *–Test pressure: 100 feet [30 meters] H_2O (40 PSID); Test Medium: Air; Duration: 2 hours.*
** *–NEMA 4X applies to stainless steel enclosure only.*
*** *–14-32 VDC for hazardous area option.*

Output Signal Selection (not available with intrinsically safe option):

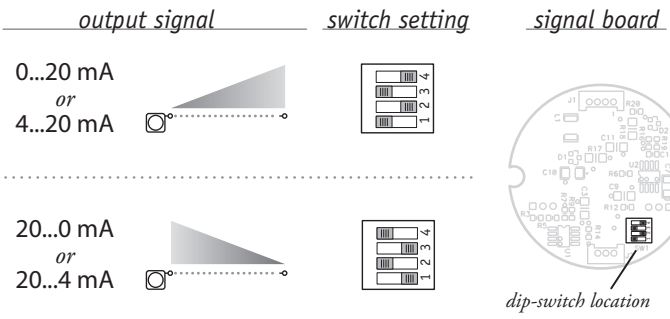

The output signal direction can be reversed at any time by simply changing the dip-switch settings found on the internal signal board. After the settings have been changed, adjustment of the Zero and Span trimpots will be required to precisely match signal values to the beginning and end points of the stroke.

To gain access to the signal board, remove four Allen-Head Screws and remove end cover bracket.

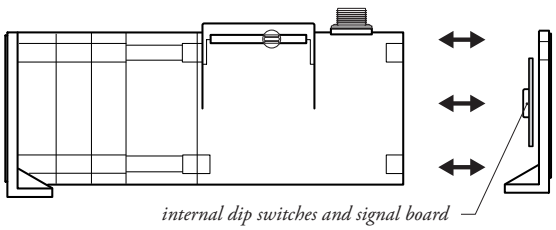
internal dip switches and signal board

Caution! Do Not Remove Spring-Side End Cover
Removing spring-side end cover could cause spring to become unseated and permanently damaged.

VLS Option - Free Release Protection

Our Velocity Limiting System (VLS) is an option for PT9000 Series cable extension transducers that limits cable retraction to a safe 40 to 55 inches per second for the single spring option and 40 to 80 inches per second for the higher tension dual spring option.

The VLS option prevents the measuring cable from ever reaching a damaging velocity during an accidental free release. This option is ideal for mobile applications that require frequent cable disconnection and reconnection. It prevents expensive unscheduled downtime due to accidental cable mishandling or attachment failure.

How To Configure Model Number for VLS Option:

1. using guide below, select PT9420 model **PT9420-1200-111-1110**
2. remove "PT" from the model number ~~PT~~ **9420-1200-111-1110**
3. add "VLS" **VLS + 9420-1200-111-1110**
4. completed model number! **VLS9420-1200-111-1110**

VLS9420- ____ (R) - __ (A) __ (B) __ (C) - **1** (D) __ (E) __ (F) **0** (G)

(R)	(A)	(B)	(C)	(D)	(E)	(F)
0600	1	1	1		1	1
0800	3	2	2		2	2
1000			3		3	3
1200			4		4	4
1500					5	5
1700					6	6
						7

= available options.

NORTH AMERICA
Measurement Specialties, Inc.
a TE Connectivity Company

20630 Plummer Street
Chatsworth, CA 91311
Tel +1-800-423-5483
Tel +1-818-701-2772
Fax +1-800-701-2799

customercare.chtw@te.com

te.com/sensorsolutions

Measurement Specialties Inc. a TE Connectivity company

Measurement Specialties, TE Connectivity, TE Connectivity (logo) and Every Connection Counts are trademarks. All other logos, products and/or company names referred to herein might be trademarks of their respective owners.

The information given herein, including drawings, illustrations and schematics which are intended for illustration purposes only, is believed to be reliable. However, TE Connectivity makes no warranties as to its accuracy or completeness and disclaims any liability in connection with its use. TE Connectivity's obligations shall only be as set forth in TE Connectivity's Standard Terms and Conditions of Sale for this product and in no case will TE Connectivity be liable for any incidental, indirect or consequential damages arising out of the sale, resale, use or misuse of the product. Users of TE Connectivity products should make their own evaluation to determine the suitability of each such product for the specific application.

© 2016 TE Connectivity Ltd. family of companies All Rights Reserved.