10603-0000-0 ✔ ACTIVE

RAYCHEM

TE Internal #: 715025-000

600 VAC, Black Cable, -55 – 125 °C, 4/0 AWG, Tin-Coated Copper, Power Cable

View on TE.com >

Wire & Cable > Power Cable



Cable Type: **Power**

Operating Voltage: **600 VAC**

Wire & Cable Insulation Material: **Thermorad N**

Cable Color: **Black**

Operating Temperature Range: **-55 – 125 °C**

Features

Product Type Features

Wall Type	Dual Wall

Body Features

Wire Color (Base)	Black
Wire & Cable Insulation Material	Thermorad N
Cable Color	Black
Conductor Material	Tin-Coated Copper

Usage Conditions

Cable Type	Power
Operating Temperature Range	-55 – 125 °C

Electrical Characteristics

Operating Voltage	600 VAC

Dimensions

Wire Size	4/0 AWG

Other

EU RoHS Compliance	Compliant
EU ELV Compliance	Compliant

Product Compliance

For compliance documentation, visit the product page on TE.com>

EU RoHS Directive 2011/65/EU	Compliant
EU ELV Directive 2000/53/EC	Compliant
China RoHS 2 Directive MIIT Order No 32, 2016	No Restricted Materials Above Threshold
EU REACH Regulation (EC) No. 1907/2006	Current ECHA Candidate List: JUNE 2024 (241) Candidate List Declared Against: JAN 2024 (240) Does not contain REACH SVHC
Halogen Content	Out of Scope - excluded from Halogen requirements
Solder Process Capability	Not applicable for solder process capability

Product Compliance Disclaimer

This information is provided based on reasonable inquiry of our suppliers and represents our current actual knowledge based on the information they provided. This information is subject to change. The part numbers that TE has identified as EU RoHS compliant have a maximum concentration of 0.1% by weight in homogenous materials for lead, hexavalent chromium, mercury, PBB, PBDE, DBP, BBP, DEHP, DIBP, and 0.01% for cadmium, or qualify for an exemption to these limits as defined in the Annexes of Directive 2011/65/EU (RoHS2). Finished electrical and electronic equipment products will be CE marked as required by Directive 2011/65/EU. Components may not be CE marked. Additionally, the part numbers that TE has identified as EU ELV compliant have a maximum concentration of 0.1% by weight in homogenous materials for lead, hexavalent chromium, and mercury, and 0.01% for cadmium, or qualify for an exemption to these limits as defined in the Annexes of Directive 2000/53/EC (ELV). Regarding the REACH Regulation, the information TE provides on SVHC in articles for this part number is based on the latest European Chemicals Agency (ECHA) 'Guidance on requirements for substances in articles' posted at this URL: https://echa.europa.eu/guidance-documents/guidance-on-reach

Compatible Parts



TE Part # 9-120035-5
HarnWare/HarnVis Purchase Charge



TE Part # 9-120035-6
HarnWare/HarnVis Renewal Charge

Customers Also Bought



TE Part #CAT-D487-W416
Wedgelocks: DEUTSCH DT



TE Part #DT04-2P
REC, 2P, GRY, N



TE Part #DT06-2S
PLG, 2P, GRY, N



TE Part #CAT-D48-ST273
DEUTSCH Solid Contacts



TE Part #CAT-AM71-CH8172
AMP SUPERSEAL 1.5MM, CONNECTOR HOUSING

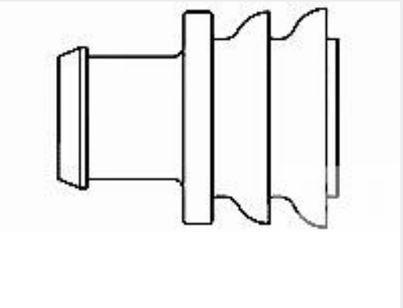

TE Part #281934-2
SINGLE WIRE SEAL

Documents

Product Drawings

10603-0000-0

English

Datasheets & Catalog Pages

1654025_Sec9_PowerCables

English

Product Specifications

Wire and Cable, Electrical, Insulated, High Temperature

English