Verpackt in Gurtverpackung - *Tape on Reel Packaging*
Verpackungseinheit: 280 Stück - *Packaging unit: 280 pcs*

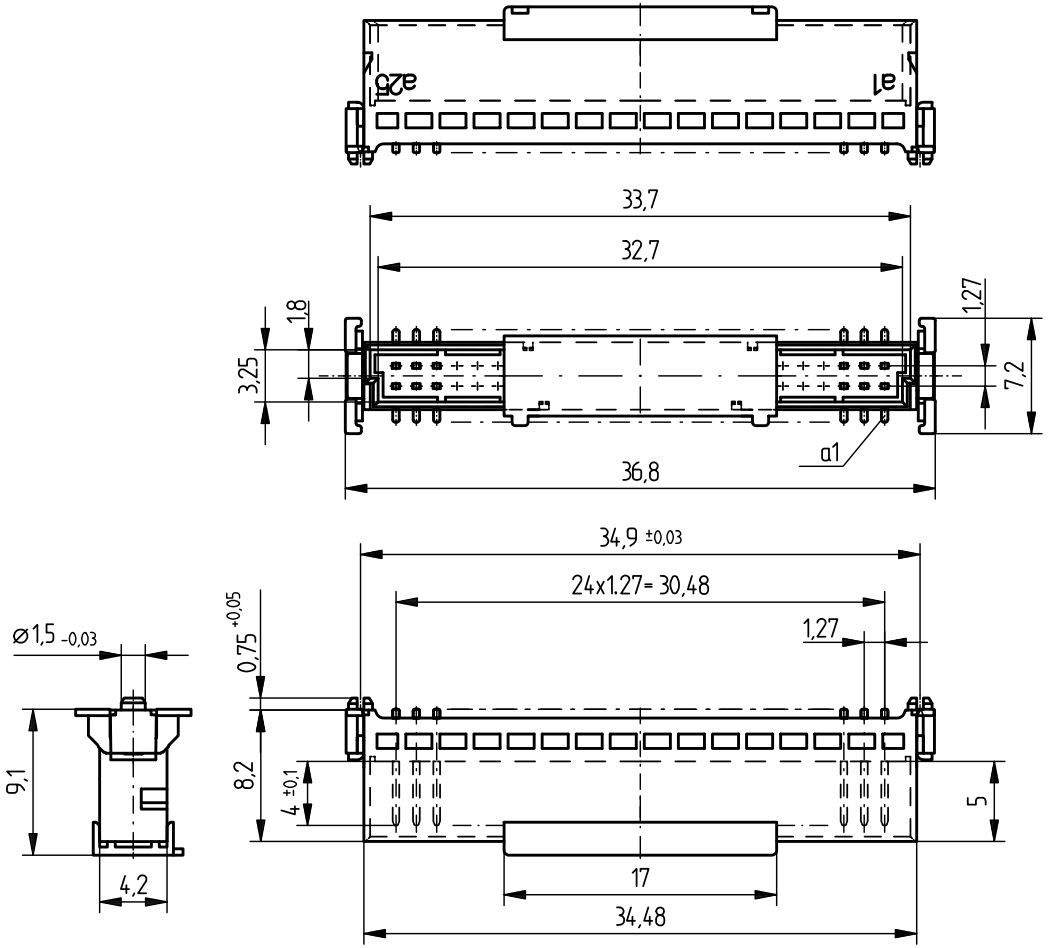

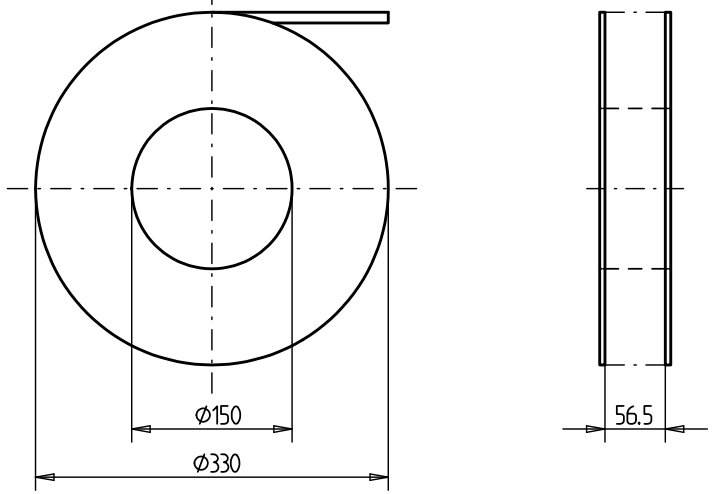

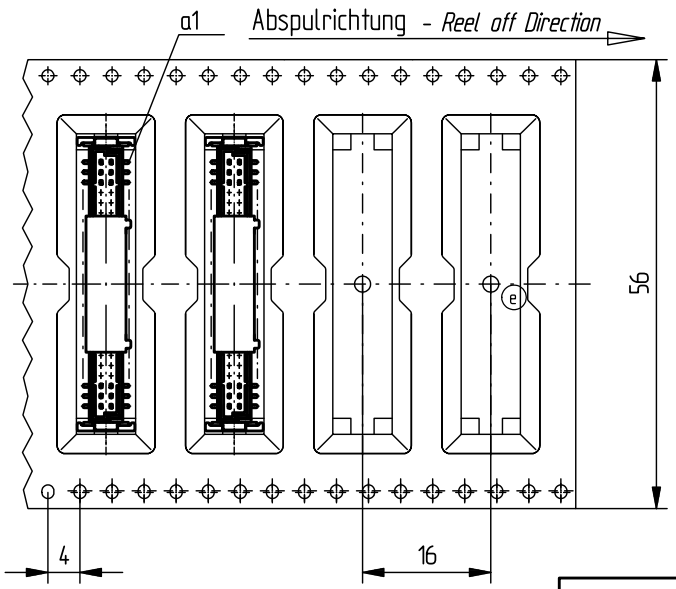

Leiterplatten-Layout Vorschlag für SMT
PCB-Layout Proposal for SMT

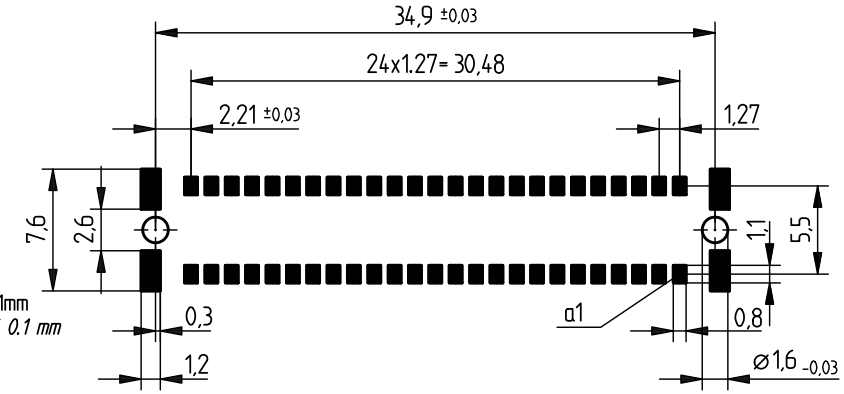

Anforderungsstufe 1
Performance Level 1

Kontaktbereich vergoldet
Mating Area gold plating

Anschlussbereich verzinnt 4-6 µm
Terminal Area 4-6 µm tin plating

Koplanarität der Anschlüsse ≤ 0.1mm
Coplanarity Area of Termination ≤ 0.1 mm

Standard Bauhöhe			
Standard Assembly Height			
Information:	Tolerances / All Dimensions in mm	Scale 3:1	
All rights reserved. Only for information. To insure that this is the latest version of this drawing, please contact one of the ERNI companies before using.	Subject to modification without prior notice. Drawing will not be updated.	Designation: Messerleiste SMC-Q, 50 polig / *Male Conn. SMC-Q, 50 contacts*	
	ERNI www.ERNI.com	063210	1
g / Index	06.10.2010 / Date	M:00070152.SZA	SMCQ

Consider protection memo from DIN 34