DMC-MD 80 B 40-01 ✔ ACTIVE

DEUTSCH

TE Internal #: ZPF000000000146796

TE Internal Description: DMC-MD 80 B 40-01

View on TE.com >

Connectors > Rectangular Connectors > Standard Rectangular Connectors

Product Type: **Plug Assembly**

Connector & Housing Type: **Plug**

Mating Alignment: **With**

Mating Alignment Type: **Keyed**

Mating Retention: **With**

Features

Product Type Features

Boxmount	No
Connector Type	Plug
Prewired	No
Housing Type	Plug
Product Type	Plug Assembly
Connector & Housing Type	Plug
Insertion Force Type	Normal
Sealable	Yes

Configuration Features

Number of Positions	4
Number of Rows	1

Electrical Characteristics

Operating Voltage	125 VDC

Mechanical Attachment

Mating Alignment	With
Mating Alignment Type	Keyed
Mating Retention	With
Mating Retention Type	Center Fastener

Housing Features

Housing Material	Aluminum
Centerline (Pitch)	92 mm[3.62 in]

Dimensions

Row-to-Row Spacing	16 mm[.63 in]

Usage Conditions

Operating Temperature Range	-65 – 175 °C[-85 – 347 °F]

Operation/Application

Shielded	Yes
Circuit Application	Power & Signal

Product Compliance

For compliance documentation, visit the product page on TE.com>

EU RoHS Directive 2011/65/EU	Compliant
EU ELV Directive 2000/53/EC	Compliant
China RoHS 2 Directive MIIT Order No 32, 2016	No Restricted Materials Above Threshold
EU REACH Regulation (EC) No. 1907/2006	Current ECHA Candidate List: JAN 2020 (205) Candidate List Declared Against: JAN 2019 (197) Does not contain REACH SVHC
EU REACH Regulation (EC) No. 1907/2006	Current ECHA Candidate List: JAN 2020 (205) Candidate List Declared Against: JAN 2019 (197)
Halogen Content	Low Halogen - Br, Cl, F, I < 900 ppm per homogenous material. Also BFR/CFR/PVC Free
Solder Process Capability	Not reviewed for solder process capability

Product Compliance Disclaimer

This information is provided based on reasonable inquiry of our suppliers and represents our current actual knowledge based on the information they provided. This information is subject to change. The part numbers that TE has identified as EU RoHS compliant have a maximum concentration of 0.1% by weight in homogenous materials for lead, hexavalent chromium, mercury, PBB, PBDE, DBP, BBP, DEHP, DIBP, and 0.01% for cadmium, or qualify for an exemption to these limits as defined in the Annexes of Directive 2011/65/EU (RoHS2). Finished electrical and electronic equipment products will be CE marked as required by Directive 2011/65/EU. Components may not be CE marked.Additionally, the part numbers that TE has identified as EU ELV compliant have a maximum concentration of 0.1% by weight in homogenous materials for lead, hexavalent chromium, and mercury, and 0.01% for cadmium, or qualify for an exemption to these limits as defined in the Annexes of Directive 2000/53/EC (ELV). Regarding the REACH Regulations, TE's information on SVHC in articles for this part number is still based on the European Chemical Agency (ECHA) 'Guidance on requirements for substances in articles'(Version: 2, April 2011), applying the 0.1% weight on weight concentration threshold at the finished product level. TE is aware of the European Court of Justice ruling of September 10th, 2015 also known as O5A (Once An Article Always An Article) stating that, in case of 'complex object', the threshold for a SVHC must be applied to both the product as a whole and simultaneously to each of the articles forming part of its composition. TE has evaluated this ruling based on the new ECHA "Guidance on requirements for substances in articles" (June 2017, version 4.0) and will be updating its statements accordingly.

DMC-MD 80 B 40-01

Compatible Parts

TE Model / Part # 4-1773447-3
Wire & Cable-Protection & Termination

Customers Also Bought



TE Model / Part #ZPF000000000146309
DMC-MD 26 G-K-T



TE Model / Part #ZPF000000000148532
DMC-MD 26 B-T



TE Model / Part #
YACT20MJ43PAV00100
SQUARE FLANGE RECEPTACLE

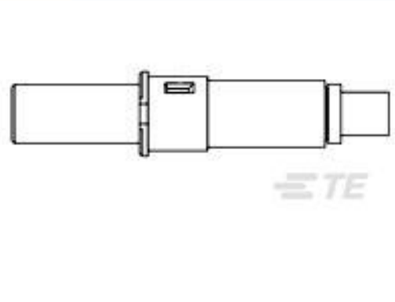

TE Model / Part #1445692-5
ASY,PIN,QUADRAX



TE Model / Part #1757624-1
SZ 8 COAX PIN,RG142,HEX CRIMP



TE Model / Part #1532171-6
M83513/04-A10N, MCKS-N1-B-9S6Q1-36.0



TE Model / Part #
YACT26MG35SCV00100
STRAIGHT PLUG



TE Model / Part #ZPF000000000146308
DMC-MD 26 F-K-T

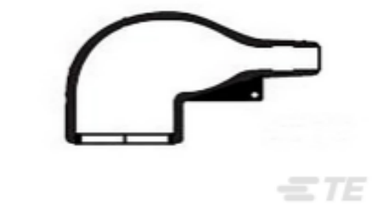

TE Model / Part #EF9981-000
222K121-25L/225-0



TE Model / Part #ZPF000000000019429
FDBA 56-16-8 SN-K 090

Documents

CAD Files

3D PDF

3D

Customer View Model
ENG_CVM_CVM_ZPF000000000146796_1.2d_dxf.zip

English

Customer View Model

DMC-MD 80 B 40-01

ENG_CVM_CVM_ZPF000000000146796_1.3d_igs.zip

English

Customer View Model

ENG_CVM_CVM_ZPF000000000146796_1.3d_stp.zip

English

By downloading the CAD file I accept and agree to the **Terms and Conditions** of use.

Datasheets & Catalog Pages

DMC-M Series Single Module EN4165

English