THIS DRAWING IS UNPUBLISHED. RELEASED FOR PUBLICATION 2012
© COPYRIGHT 2012 Tyco Electronics AMP GmbH ALL RIGHTS RESERVED.

LOC	DIST
A1	-

REVISIONS

F	LTR	DESCRIPTION	DATE	DWN	APVD
	A19	ECR-12-004218	05OCT2016	GCM	MKO
	A20	ECR-16-009337	17DEC2016	GCM	MKO
	A21	ECR-16-016696	29AUG2017	GCM	MKO

PN 0-2.0-3.0-8 & 1-2

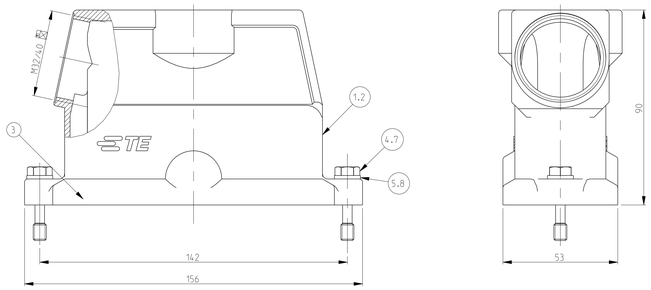

PN 0-9.1-0.1-1.1-4.1-8 & 1-9

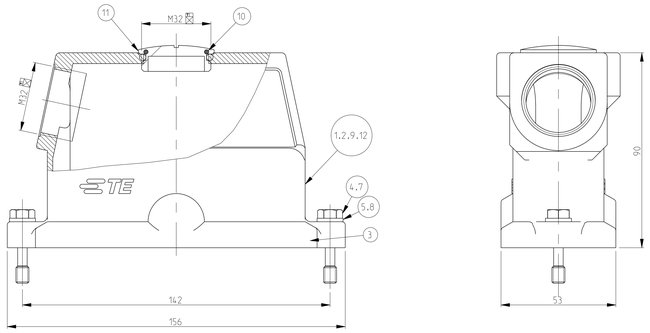

PN 0-7

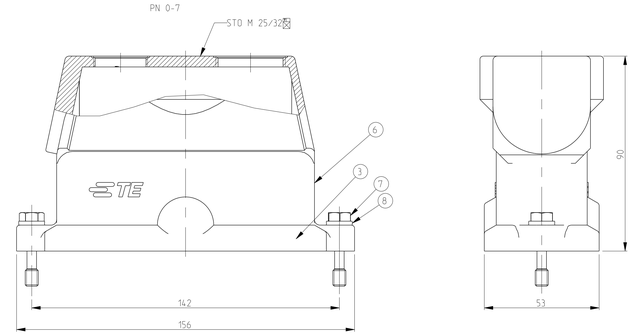

PN 0-1.0-4.0-5.0-6.1-3 & 1-6

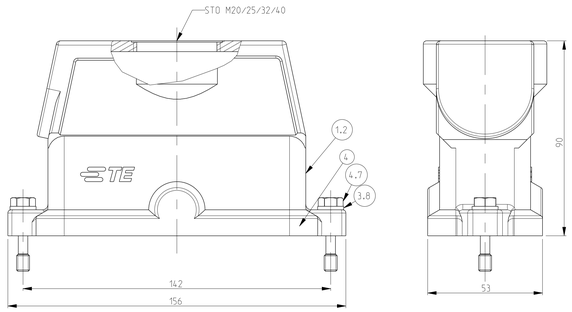

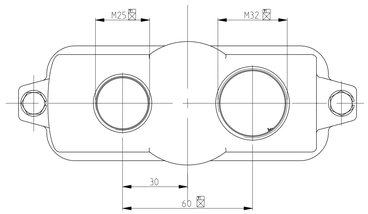

PN 1-5 & 1-7 (Neutral)

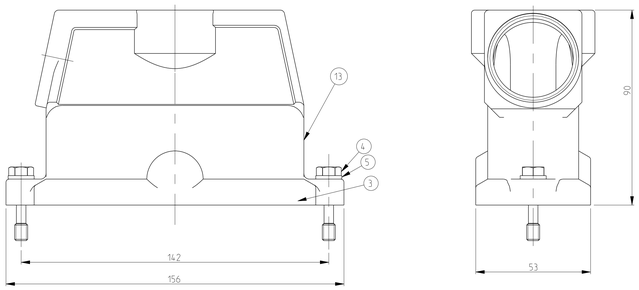

NOTES.

1. Material:Housing-Aluminium Diecasting Alloy
   Seals:Neoprene conductivity
2. Surface:Varnish grey
   -ChromitAL TCP passivation +Varnish Black
3. Packaging
   Quantity 5 Pieces in a box
4. Special Packaging
   Quantity 25 Pieces in a box
5. Varnish on the inside not necessarily

PN 0-1.0-4.0-5.0-6.1-3 & 1-6

SCALE 1:2

PN 1-2
With Weidmuller Logo

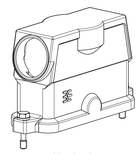

SCALE 1:2

PN 0-2.0-3.0-8 & 1-2

SCALE 1:2

PN 0-7

SCALE 1:2

PN 0-9.1-0.1-1.1-4.1-8 & 1-9

SCALE 1:2

PN 1-7.1-5 (Neutral)
Without logo

SCALE 1:2

| OBSOLETE | OBSOLETE | | | OBSOLETE | | | | | | OBSOLETE | | | | | |