THIS DRAWING IS UNPUBLISHED. RELEASED FOR PUBLICATION
© COPYRIGHT 2000 BY - ALL RIGHTS RESERVED.

REVISIONS

P	LTR	DESCRIPTION	DATE	DWN	APVD
	B4	ECR-16-009335	09DEC2016	GCM	MKO
	B5	ECR-16-015318	17AUG2017	GR	MKO

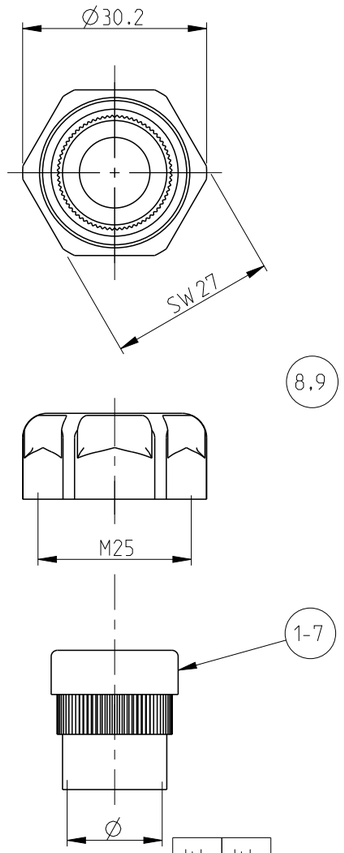

PN: 0-1 as shown

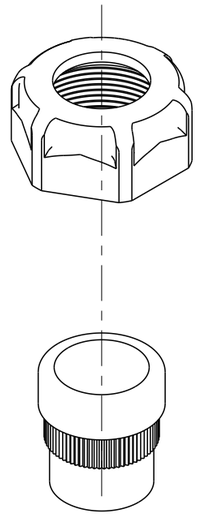

Notes

1 PACKAGING:
10 SETS IN A CARTON

OBSOLETE	OBSOLETE																	
1	1	1	1	1	1	1								GLAND NUT	-	PA6.6-GF25	LIGHT-GREY	9
							1	1	1	1	1	1	1	GLAND NUT	-	PA6.6-GF25	BLACK	8
							1							SEAL INSERT	15.5	PVC	WHITE	7
1								1						SEAL INSERT	15.5 - 11.5	PVC	WHITE	6
	1								1					SEAL INSERT	13.0 - 9.0	PVC	RED	5
		1								1				SEAL INSERT	10.5 - 7.0	PVC	GREEN	4
			1								1			SEAL INSERT	9.5 - 6.5	PVC	BLACK	3
				1								1		SEAL INSERT	8.0 - 5.0	PVC	GREY	2
					1								1	SEAL INSERT	6.5 - 4.0	PVC	YELLOW	1
1-6	1-5	1-4	1-3	1-2	1-1	0-7	0-6	0-5	0-4	0-3	0-2	0-1		DESCRIPTION	max./min.Ø	MATERIAL	COLOR	ITEM NO
HG-Q8.M25.15.5/11.5 grey	HG-Q8.M25.13.0/9.0 grey	HG-Q8.M25.10.5/7.0 grey	HG-Q8.M25.9.5/6.5 grey	HG-Q8.M25.8.0/5.0 grey	HG-Q8.M25.6.5/4.0 grey	HG-Q8.M25.15.5/11.5.SO	HG-Q8.M25.15.5/11.5	HG-Q8.M25.13.0/9.0	HG-Q8.M25.10.5/7.0	HG-Q8.M25.9.5/6.5	HG-Q8.M25.8.0/5.0	HG-Q8.M25.6.5/4.0						

THIS DRAWING IS A CONTROLLED DOCUMENT.

DIMENSIONS: mm

TOLERANCES UNLESS OTHERWISE SPECIFIED: n.ISO 8015: n.ISO 2768-mH-E: n.DIN 16901-120
0 PLC ±
1 PLC ±
2 PLC ±
3 PLC ±
4 PLC ±
ANGLES ±

MATERIAL

FINISH -

DWN Schneider 23.11.04
CHK Schweiger 31.01.05
APVD T Schnurpfeil 31.01.05
PRODUCT SPEC 108-74052
APPLICATION SPEC 114-74064
WEIGHT 0.006 KG

TE Connectivity

NAME SET GLAND M 25 SERIES HG-Q

SIZE	CAGE CODE	DRAWING NO	RESTRICTED TO
A3	00779	C-1103074	-

CUSTOMER DRAWING | SCALE 2:1 | SHEET 1 OF 1 | REV B5