THIS DRAWING IS UNPUBLISHED. RELEASED FOR PUBLICATION 2006
© COPYRIGHT 2006 ALL RIGHTS RESERVED.

LOC	DIST
A1	-

REVISIONS

F	LTR	DESCRIPTION	DATE	DWN	APVD
	B6	ECR-16-016696	23OCT2017	GR	MKO

PN 0-1

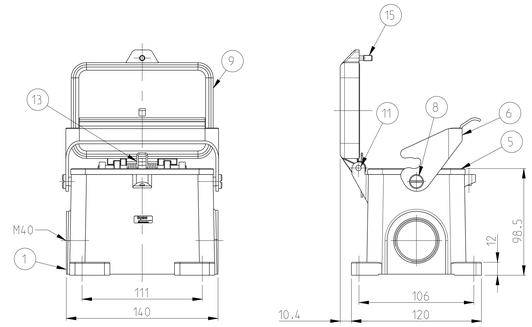

PN 0-2

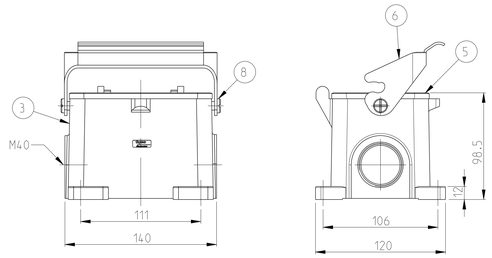

PN 0-3

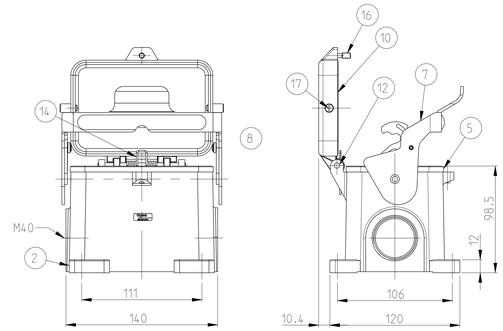

NOTES

1 PARTS SHALL BE BLANK.SMOOTH.FREE OF BURS AND ALL OTHER FOREIGN MATERIAL. NO CAST-UNEVENESS ALLOWED

2 PACKING: 2 PIECES MAX. IN A BOX

3 VARNISHING INSIDE HOUSING NOT REQUIRED

PN 0-4

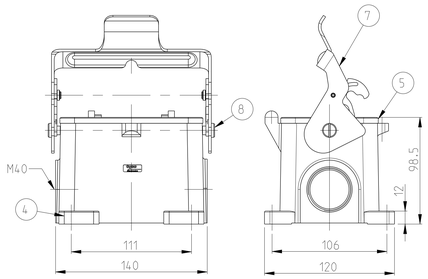

PN 0-5

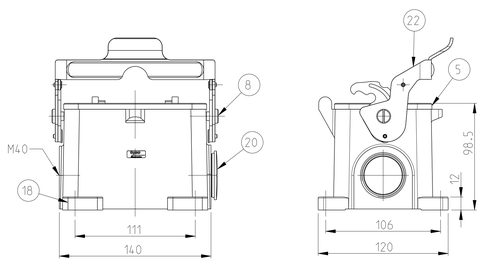

PN 0-6

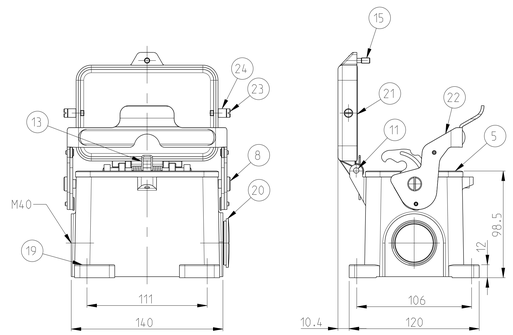

PN 0-1

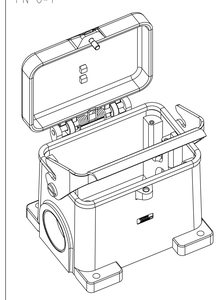

PN 0-2

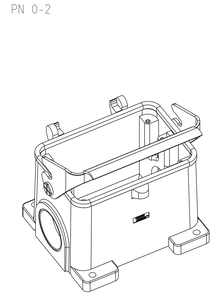

PN 0-3

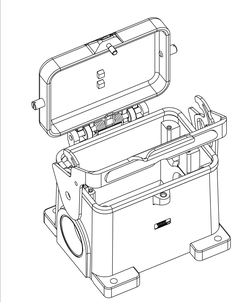

PN 0-6 & 0-8

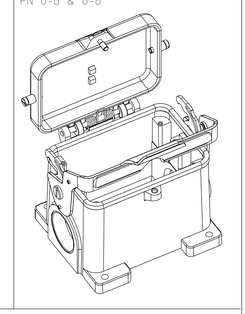

PN 0-5

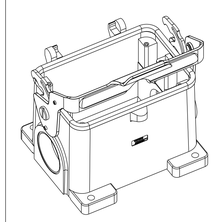

PN 0-7

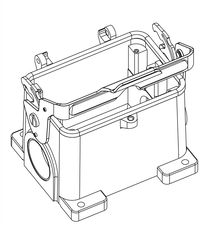

PN 0-4

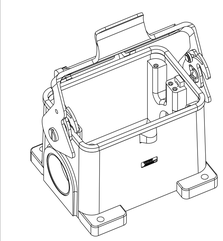

PN 0-7

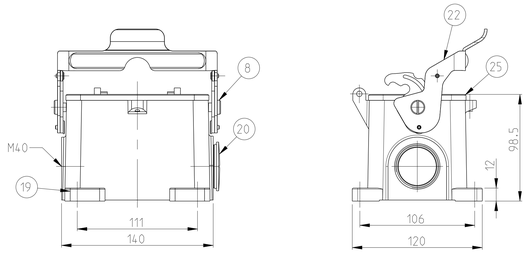

PN 0-8

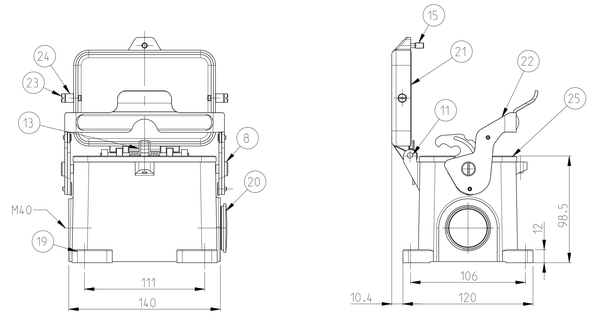

0-8	0-7	0-6	0-5	0-4	0-2	0-3	0-1	DESCRIPTION	MATERIAL	SURFACE	COLOR	ITEM	NOTES
OBSOLETE					OBSOLETE								
								PROFILE SEAL	VITON			25	
2		2						SLIDE SPOOL HB.48	STAINLESS STEEL	BLANK		24	
2		2						CLIP BOLT	STAINLESS STEEL	BLANK		23	M5
1	1 (OBS)	1	1 (OBS)					SIDE CLIP - STÄUBLI	STAINLESS STEEL	BLANK		22	
1	(OBS)	1	(OBS)					COVER	ALUMINIUM		GREY	21	
1	1	1	1					BLANKING PIECE WITH SEAL	STEEL		BLUE	20	M40
1	1	1						SURFACE MOUNTED HOUSING SIDE ENTRY	ALUMINIUM		GREY	19	NEUTRAL
			1					SURFACE MOUNTED HOUSING SIDE ENTRY	ALUMINIUM		GREY	18	NEUTRAL
	(OBS)		(OBS)			2		CLIP BOLT	STAINLESS STEEL	BLANK		17	
						1		CYLINDER SCREW	STAINLESS STEEL	BLANK		16	M5x16
1		1						CYLINDER SCREW	STEEL	ZINC PLATED	BLUE	15	M5x16
						1		LEG SPRING	STAINLESS STEEL	BLANK		14	
1		1						LEG SPRING	STEEL	ZINC PLATED	BLUE	13	
						1		RIVET PIN	STAINLESS STEEL	BLANK		12	∅5x80
1		1						RIVET PIN	STEEL	ZINC PLATED	BLUE	11	∅5x80
						1		COVER	ALUMINIUM	ALUMINIUMOXIDE	BLACK	10	
								COVER	ALUMINIUM		GREY	9	
2	2	2	2	2	2	2	2	SLOTTED PAN HEAD SCREW	STAINLESS STEEL	BLANK		8	M6x8
				1		1		SIDE CLIP	STAINLESS STEEL	BLANK		7	
								SIDE CLIP	STEEL	ZINC PLATED	BLUE	6	
		1	1	1	1	1	1	PROFILE SEAL	NEOPRENE		BLACK	5	
				1				SURFACE MOUNTED HOUSING SIDE ENTRY	ALUMINIUM	ALUMINIUMOXIDE	BLACK	4	
					1			SURFACE MOUNTED HOUSING SIDE ENTRY	ALUMINIUM		GREY	3	
						1		SURFACE MOUNTED HOUSING SIDE ENTRY	ALUMINIUM	ALUMINIUMOXIDE	BLACK	2	
								SURFACE MOUNTED HOUSING SIDE ENTRY	ALUMINIUM		GREY	1	

~~HB.48.SGD-LB.2.M40.Z~~

~~HB-K.48.SGD-LB.2.M40.Z~~

~~HB.48.SG-LB.2.M40.Z~~

~~HB.48.SG-LB.2.M40.Z~~

HB-K.48.SG-LB.2.M40.Z+BS

HB.48.SGD-LB.2.M40.Z+BS

~~HB.48.SG-LB.2.M40.Z+BS-V~~

~~HB.48.SGD-LB.2.M40.Z+BS-V~~

THIS DRAWING IS A CONTROLLED DOCUMENT.

DIMENSIONS: mm

TOLERANCES UNLESS OTHERWISE SPECIFIED: 0 PLC ± 0.5 MM 1 PLC ± .4 2 PLC ± .25 3 PLC ± .12 4 PLC ± .05 ANGLES ±

MATERIAL 4 FINISH 5

DWN B.SCHNEIDER 26.JAN.2009
CHK B.SCHNURPFEIL 26.JAN.2009
APVD
PRODUCT SPEC -
APPLICATION SPEC
WEIGHT -

TE Connectivity

NAME SURFACE MOUNTED HOUSING SIDE ENTRY HB.48.SGD-LB.2.M40.Z+BS

SIZE A0 | CAGE CODE | DRAWING NO C-1106481 | RESTRICTED TO

CUSTOMER DRAWING | SCALE 1:2 | SHEET 1 OF 1 | REV B6

4806 (3/11)