SUNON®

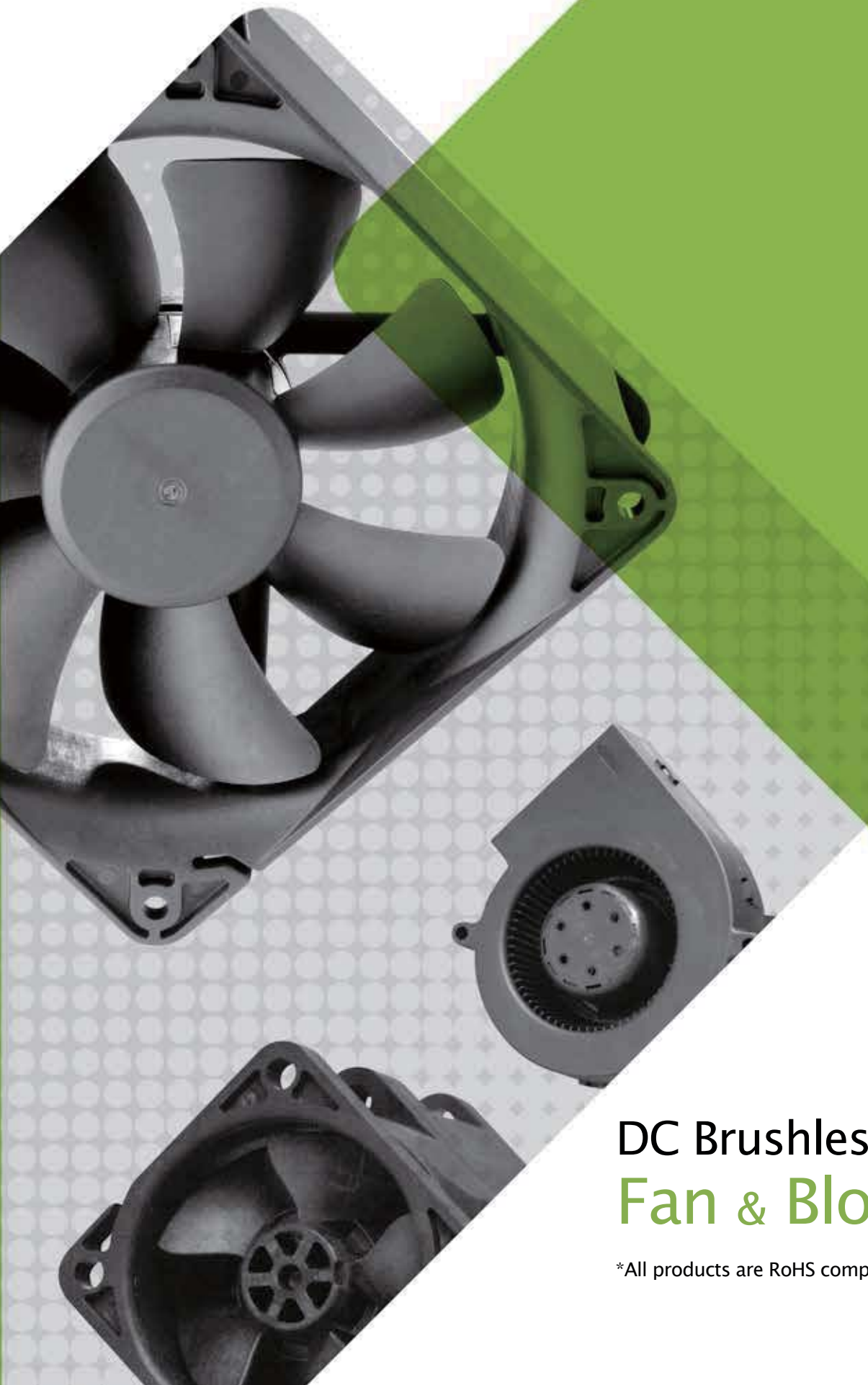

DC Brushless
Fan & Blower

*All products are RoHS compliant.

SUNON®

TABLE of CONTENTS

Company Profile

Sunon Research Center	04
DR Maglev	06
Total Thermal Solution	07
Invention Innovation Center	08
Production Network	10

DC Fan

DC Fan New Model Numbering System	12
DC Fan Old Model Numbering System	13

Size (mm)	Air Flow (CFM)	Page
17 x 17 x 8	0.7 ~ 0.9	14
20 x 20 x 6	0.3 ~ 1.1	15
20 x 20 x 8	1.3 ~ 1.6	16
20 x 20 x 10	1.5 ~ 1.9	17
25 x 25 x 6	2.2 ~ 3.0	18
25 x 25 x 10	1.2 ~ 3.8	19
25 x 25 x 15	1.3 ~ 3.1	20
30 x 30 x 6	3.7 ~ 4.9	21
30 x 30 x 10	2.5 ~ 5.5	22
30 x 30 x 15	2.7 ~ 6.0	24
35 x 35 x 6	4.3 ~ 5.5	25
35 x 35 x 10	3.6 ~ 7.2	26
36 x 36 x 28	18.1 ~ 22.8	27
38 x 38 x 28	11.3 ~ 24.2	28
38 x 38 x 56	31.2	30
40 x 40 x 6	5.5 ~ 6.3	31
40 x 40 x 10	5.4~10.0	32
40 x 40 x 20	5.5 ~ 11.0	37
40 x 40 x 28	12.8 ~ 31.5	41
40 x 40 x 56	19.7 ~ 31.7	45
45 x 45 x 10	9.4 ~ 12.4	47
50 x 50 x 10	8.4 ~ 13.8	49
50 x 50 x 15	7.7 ~ 18.6	50
60 x 60 x 10	12.2 ~ 16.3	52
60 x 60 x 15	10.6 ~ 30.4	53
60 x 60 x 20	14.1 ~ 30.5	56
60 x 60 x 25	13.8 ~ 54.8	60
60 x 60 x 38	41.4 ~ 75.2	65
60 x 60 x 56	58.5 ~ 72.9	67
60 x 60 x 76	58.7 ~ 73.2	68
70 x 70 x 15	19.1 ~ 27.3	69
70 x 70 x 25	40.0 ~ 49.0	70
80 x 80 x 15	30.0 ~ 37.0	71
80 x 80 x 25	23.9 ~ 60.0	73
80 x 80 x 32	50.3 ~ 59.4	82
80 x 80 x 38	59.5 ~ 141.9	83
80 x 80 x 80	122.0 ~ 151.5	87
92 x 92 x 25	28.4 ~ 75.0	88
92 x 92 x 38	91.7 ~ 182.4	97
120 x 120 x 25	55.1 ~ 150.0	100
120 x 120 x 38	93.0 ~ 301.7	103
140 x 140 x 38	238.5 ~ 297.9	106
140 x 140 x 51	250.3	108

DC Blower

DC Blower New Model Numbering System	110
DC Blower Old Model Numbering System	111

Size (mm)	Air Flow (CFM)	Page
50 x 50 x 15	2.6 ~ 5.4	112
50 x 50 x 20	4.8 ~ 5.8	114
60 x 60 x 15	5.1 ~ 6.2	115
75 x 75 x 30	10.8 ~ 15.5	116
97 x 94 x 33	22.4 ~ 30.5	117
97 x 95 x 33	44.2 ~ 54.7	118
100 x 100 x 25	18.4	119
120 x 120 x 32	31.4 ~ 35.9	120

SUNON RESEARCH CENTER

about SUNON

SUNON was founded in 1980 and has always upheld the philosophy of "Brand, Innovation, and Value" for their business operations. From the start, the SUNON name has become an international trademark that is well recognized and featured on products sold worldwide. Over the years, SUNON has continuously focused on developing and making innovations for their core motor technology, leading the industry in product trends for motors, cooling fans, and cooling modules. SUNON is one of the few operations in the world with a motor R&D team and is fully capable of developing innovative new motor designs. Examples for the R&D efforts are the world's first MagLev design and SUNON Mighty Mini series, featuring a compact sub-centimeter size that is the world's smallest and thinnest fan. Today, SUNON is the worldwide leader in precision motors and micro miniature fans, and is widely recognized by the industry as the designated partner for various multinational corporations. SUNON products are widely used in various applications and industries such as information technology, network communications, optoelectronics, and automobile electronics industries, as well as in industrial production equipment, medical equipment, home applications, OA machines, and others.

SUNON Research Center the Driving Engine for Inventions and Innovations

SUNON established the "SUNON Research Center" in Kaohsiung in 2002 to promote and execute the innovation blueprint for SUNON Group. Research labs and engineers from Europe, America, Japan, and China are centralized to form a worldwide technological service network for quick and efficient services.

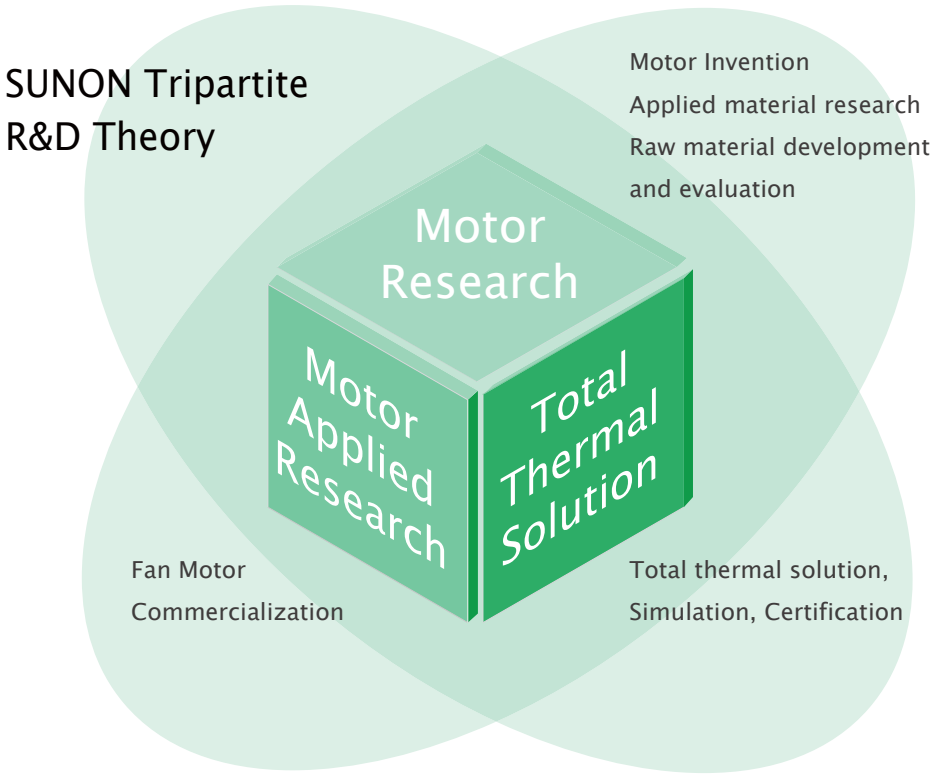

Key Modules for Innovating Core Motor Technology

SUNON has been researching their motor technology for over 40 years and adhering to the SUNON R&D Trinity as their innovation roadmap, focusing on the three major technology fields of "Motor Research," "Motor Applied Research," and "Total Thermal Solution." SUNON strives to expand the endless possibilities and optimization of motor applications and will continue to make breakthroughs and product innovations. The efforts will push SUNON to the front of the technology curve and clients will be able to realize their future dream products with the three key SUNON products of motors, cooling fans, and cooling modules.

SUNON has the capacity to design and implement the complete magnetic, mechanical, and driving circuit of a motor to conform to client design specifications. With the efforts of the mechanism and electrical circuit engineering teams, SUNON recognizes the needs of their clients regarding cooling modules and can provide flexible designs for high performance and high quality cooling fans. SUNON utilizes advanced simulation systems and analysis projects that result in an even more accurate heat analysis and heat dissipation design for the system. Subsequently the most efficient total thermal solution can be provided to the client.

DR MagLev (Dust-Resistance MagLev)

The two innovative design concepts of DR MagLev development are B&S (Blanked & Seamless) Technology and S&C (Seal & Clip) Design. These innovative designs bring excellent efficiencies to extend fan life.

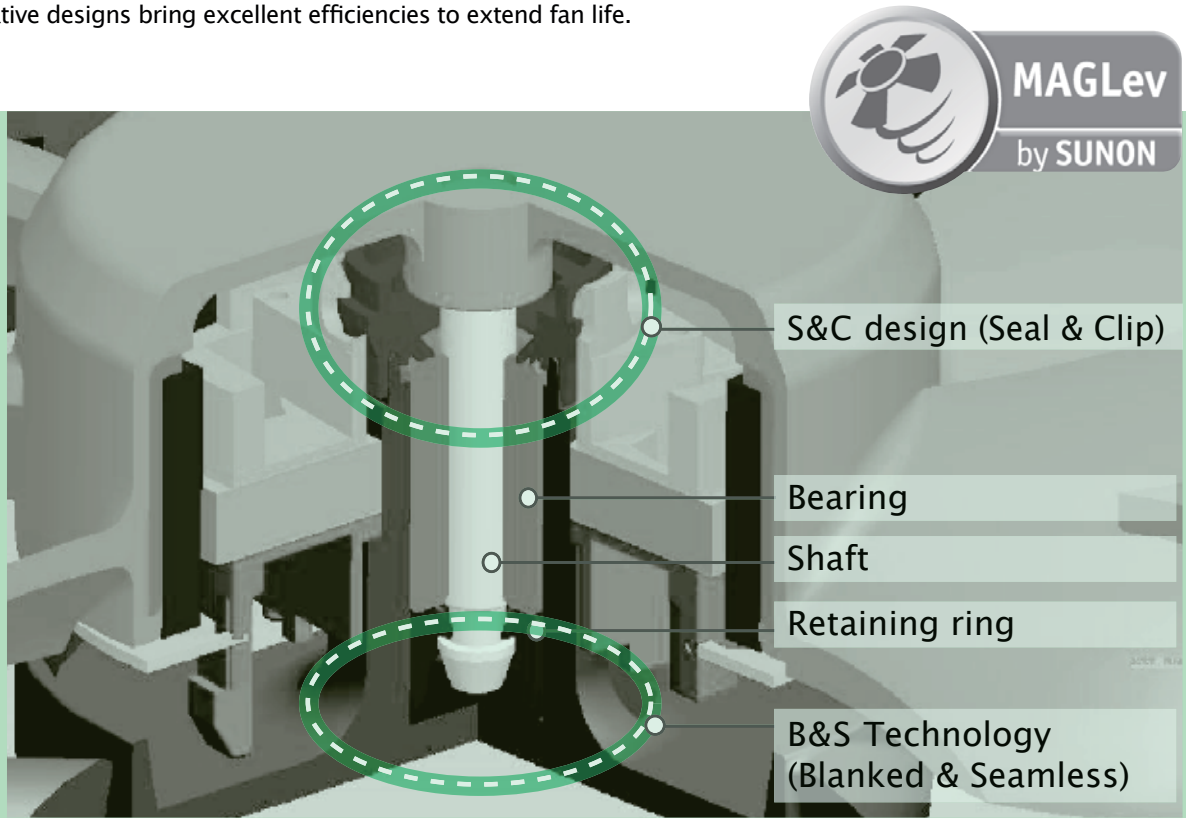

※ Note: The design concepts of DR MagLev Motor are suitable for every kind of motor and product size. The structures are different from the above picture, which was made when the DR MagLev design was applied to different motors.

1

DR MagLev provides the best resistance to dust invasion.It can solve the moving problem of the motor's components, provide better dust-resistance.

2

DR MagLev's one-piece structure with the B&S Technology and S&C Design provides the better sealed bearing system.

3

The S&C Design strengthens the locked position of both motor and stator to avoid stator and impellor from moving due to temperature changes. This allows the product to be more stable and run longer.

SUNON®

TOTAL THERMAL SOLUTION

- ✔ Increases product profitability
- ✔ Reduces development costs and increases profits
- ✔ Decreases prototype development time
- ✔ Provides the most economic design solution

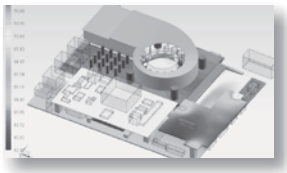

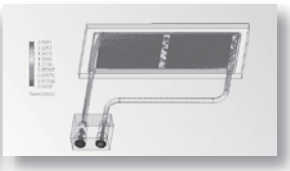

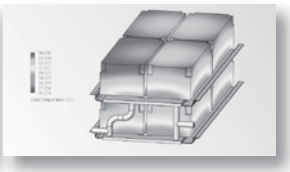

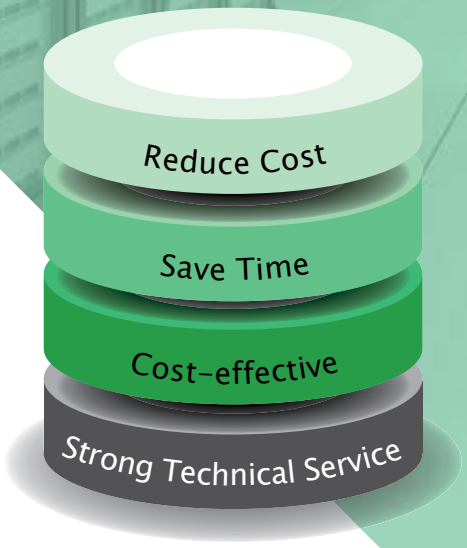

Thermal Solution & Simulation Analysis

- Individual module / system thermal analysis
- Vent Optimization
- Temperature distribution
- Velocity profile
- Pressure distribution

Sophisticated Tools Strengthen Design and Quality

Apart from optimized design and superior R&D, we use infrared (IR) thermal imagers in module design work to make precise measurements of module temperatures, thereby avoiding the use of conventional thermocouples to measure temperatures. Our R&D personnel can instead rely on IR images to get a clear understanding of system temperature distribution. The data from our thermal imaging reports allow us to provide a clear system-wide thermal and cooling design analysis. In order to give customers the best quality guarantee, we go well beyond industry standards in production, assembly, inspection equipment design and deployment. We have also committed large amounts of manpower and material resources, and adopted the newest hardware and software equipment in our quest for quality.

For instance, our thermal inspection systems can fully simulate thermal resistance measurements and pressure settings within systems and measure thermal resistance simultaneously at six different points. Precise measurements of pressure settings enable simulation of pressure within the system, making measurements even more accurate and protecting product quality by ensuring that excessive pressure doesn't cause product deformation. Furthermore, independent bar codes on each product ensure effective product tracking and improve the quality of after-sales service. We can satisfy our customers' needs for various types of customized cooling modules while meeting the highest quality requirements.

SUNON®

INVENTION INNOVATION CENTER

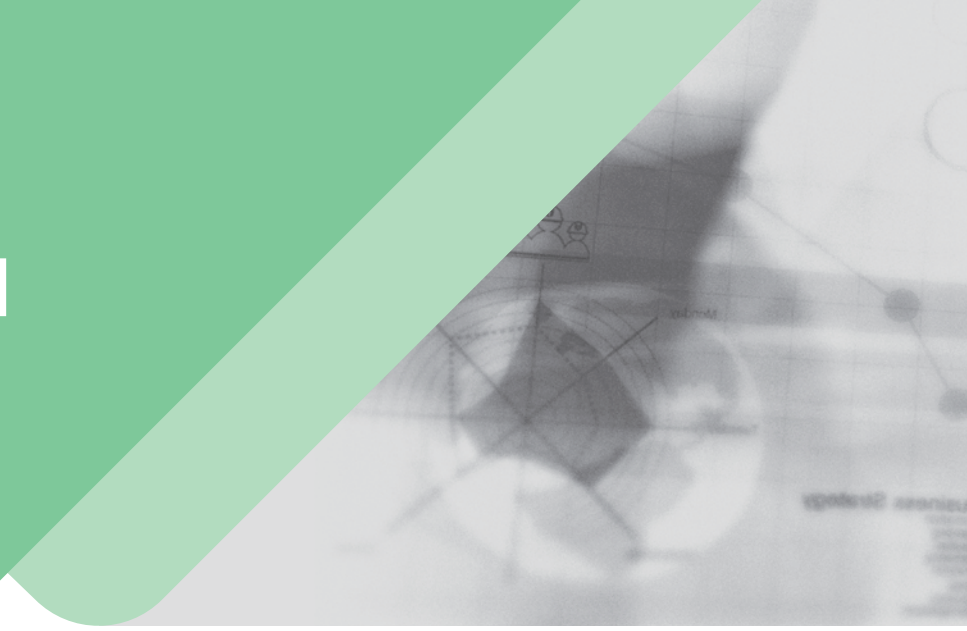

To ensure the high reliability of product quality, SUNON has various verification labs with strict standards for materials, testing, verification and product launch. SUNON's labs can perform material analysis, acoustic performance tests, EMC / EMI verification, product reliability verification, and UL-certified safety testing which accelerates the safety certification process.

Precision Measurements & Material Analysis

As products become more and more sophisticated and diversified, SUNON materials lab is committed to finding the key factors to improve the bearing system lifespan and materials accuracy of fan products. Besides, SUNON also aims at fixing noise, vibration and temperature rise to make motor systems more stable and improve fan products' performance. This lab also works to provide more accurate data for product development, customer projects, and product abnormalities analysis.

Acoustic Performance Experiment

The sound quality project was introduced in 2000. Through the HEAD Measurement System (HMS) of German Head Acoustics, SUNON has recorded and simulated human hearing sensation, and has measured sound, vibration, rotational speed and electrical appliances signal information to improve sound quality. Besides, SUNON has also used Artemis software to acquire time-domain spectroscopy, psychoacoustic parameters, and diversified sound analysis. As a result, the sound quality of SUNON's products is always pleasant and more human-friendly.

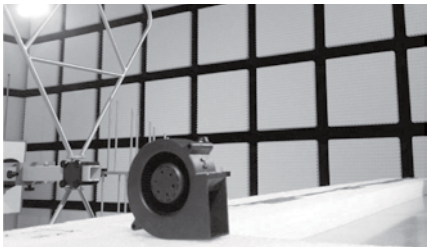

EMC / EMI
Electromagnetic Compatibility Verification

The purpose of electromagnetic compatibility experiments is to ensure that all electronic products can operate normally in the same space without interfering with each other, especially crucial in the automotive field and electronic products for users' safety.

Product Reliability Verification

From design, trial production to mass production, SUNON accurately assesses product reliability through a series of rigorous testing by computer-controlled verification systems. We will, in response to the requirements of product development for various industries, continue to renew and upgrade our equipment to ensure that all stages of our production are supported with all necessary tools, whether it is in the simulation stage, the testing stage, or the production stage.

- High-temperature life testing
- High/low-temp. cycle testing
- Locked power-off testing
- Package drop testing
- Mechanical stress testing
- Environmental & reliability verification

Safety Testing and Certification

SUNON safety testing lab has enhanced the safety testing of DC, AC, EC products o development phase, and has accelerated certification awarding process to ensure product safety. We have obtained approval from UL recognized WTDP Lab, so the testing reports can be validated as safety certification reports. We have also completed some product verifications regarding energy-efficiency and explosion-proof.

SUNON®

PRODUCTION NETWORK

SUNON Production Network

To ensure sufficient capacity for mass produced parts, SUNON has established four professional production facilities in the following locations: Kaohsiung, Taiwan; Foshan (Guangdong), China; Kunshan (Jiangsu), China; and Beihai (Guangxi), China. From these four locations, SUNON is capable of producing AC and DC fan and motor models that range in size from 8mm to 250mm, as well as a variety of thermal modules. Our ERP system gives us the flexibility to meet our clients' demands and our monthly production capacity.

SUNON®

Quality Management System

SUNON is convinced that the quality of products, as well as pursuing the technical capabilities, is the key factor for expanding product lifespan. Thus, in early 2010, SUNON endeavored to develop automation equipment, which not only enhances the stability of product quality, but also controls output efficiency more accurately. Moreover, the adoption of digital management and product quality tracking system becomes an important milestone for SUNON.

Green Product Management System

SUNON has obtained ISO 14001, ISO45001, and IECQ QC080000 certification for the environmental management system of its facilities in Kaohsiung, Taiwan, Kunshan, China, and Foshan, China. The appeal of SUNON's product design and development is environmental protection and energy-savings, and we have invested in green designs that will reduce material consumption and save electricity. In the production process, we have asked our suppliers to comply with the provisions of the RoHS Directives in their manufacturing process by not using prohibited materials, and the process of product development should also meet the requirements for environmental protection.

Furthermore, we also pay close attention to various international issues on the protection of the environment and the use of energy and have promoted the standardization of halogen-free to ensure that its products are fully compliant with the green environmental provisions in new chemical policies as stipulated in RoHS Directives and REACH. As a responsible corporate citizen of the world, SUNON is an advocate in the prevention of abuses and hostilities in the exploitation and trade of these conflict resources that result in serious violation of international human rights. SUNON promise to reject metals and materials obtained from the conflict mining regions.
We will protect our employees, the customers we serve, and the environments in which we operate. Moreover, SUNON has also educated its employees to make them realize the importance of environmental protection and energy saving. In addition to the establishment of a process and system for the computerization of documents, we also vigorously promote the 6S policies (Sort, Set, Shine, Standardize, Sustain, and Safety), hoping that SUNON can serve as a good example and unite more people to improve the environment of the earth in which we live in! We expect to forge An Entirely Green SUNON .

Declaration of Conflict-Free Minerals

Declaration of REACH Compliance

Declaration of RoHS Compliance

DC Fan New Model Numbering System

M E 80 25 1 V 1 – 1 000U – A99

Function Code
- 999 : Standard Model
- A99 : AutoRestart
- C99 : F type (3rd wire)
- F99 : AutoRestart and R type(3rd wire)
- G99 : AutoRestart and F type(3rd wire)
- H99 : AutoRestart with PWM
- Q99 : AutoRestart , R type with PWM
- S99 : AutoRestart , F type with PWM

Customer Code → by Customer

Generation Code → Blank: None 1 : Gen1

Speed → X: Super High; 1: High 2: Medium 3: Low 4: Super Low

Bearing → V: Vapo B: 2 Ball S: Sleeve

Voltage → 0: 5VDC 1: 12VDC 2: 24VDC 4: 48VDC

Fan Thickness

Frame Size

Code	Size(mm)	Code	Size(mm)	Code	Size(mm)	Code	Size(mm)
01~09	01~09	A0~A9	100~109	K0~K9	200~209	V0~V9	300~309
10~19	10~19	B0~B9	110~119	L0~L9	210~219	W0~W9	310~319
20~29	20~29	C0~C9	120~129	M0~M9	220~229	X0~X9	320~329
30~39	30~39	D0~D9	130~139	N0~N9	230~239	Y0~Y9	330~339
40~49	40~49	E0~E9	140~149	P0~P9	240~249	Z0~Z9	340~349
50~59	50~59	F0~F9	150~159	Q0~Q9	250~259		
60~69	60~69	G0~G9	160~169	R0~R9	260~269		
70~79	70~79	H0~H9	170~179	S0~S9	270~279		
80~89	80~89	I0~I9	180~189	T0~T9	280~289		
90~99	90~99	J0~J0	190~199	U0~U9	290~299		

Motor Type

Series Code → M Series E Series P Series V Series G Series

Certification

QC 080000 IECQ HSPM

Safety

※ Note: For critical or extreme environments, including non stop operation, please contact SUNON and we will gladly provide assistance with your product selection to ensure an appropriate cooling product for your application.

※ Note: The "Life Expectancy" of the fan has not been evaluated for use in combination with any end application. Therefore, the Life Expectancy Test Reports(L10 and MTTF Report) that relate to the fan are only for reference.

DC Fan Old Model Numbering System

PMD 12 12 P M B 1 — A P/N

- A → Auto Restart
- 1 → Speed: X: Super; 1: High; 2: Middle; 3: Low; 4: Extra Low
- B → Bearing System: V: Vapo; B: Ball
- M → Frame Thickness: E: 6mm; D: 8mm; F: 10mm; G: 12mm; H: 15mm; K: 20mm; B: 24mm; T: 25mm; Q: 28mm; N: 30mm; L: 32mm; Y: 33mm; I: 35mm; M: 38mm; O: 40mm; P: 56mm; W: 60mm
- P → Frame Material: P: PBT Plastic; A: Aluminum
- 12 → Frame Size: 17:17mm; 01:20mm; 02:25mm; 03:30mm; 35:35mm; 38:38mm; 04:40mm; 45:45mm; 05:50mm; 55:55mm; 06:60mm; 07:70mm; 75:75mm; 08:80mm; 09:92mm; 97:97mm; 12:120mm; H0:170mm
- 12 → Voltage: 05:5VDC; 12:12VDC; 24:24VDC; 48:48VDC
- PMD → Fan Series: PMD Series

P/N

Example: PMD1212PMB1-A P/N: (2).GN

- (2) Two ball bearing
- A Auto restart
- F 3rd wire with frequency generation waveform
- R 3rd wire with rotation detector waveform
- Z Specific RPM
- PWM with PWM function
- GN RoHS compliance

Certification

QC 080000 IECQ HSPM

Safety

※ Note: For critical or extreme environments, including non stop operation, please contact SUNON and we will gladly provide assistance with your product selection to ensure an appropriate cooling product for your application.

※ Note: The "Life Expectancy" of the fan has not been evaluated for use in combination with any end application. Therefore, the Life Expectancy Test Reports(L10 and MTTF Report) that relate to the fan are only for reference.

17x17x8 mm

0.7~0.9 CFM

Specification

MAGLev by SUNON	Bearing	Rated Voltage	Power Current	Power Consumption	Speed	Airflow	Static Pressure	Noise	Weight	Curve
	● VAPO	(VDC)	(mA)	(WATTS)	(RPM)	(CFM)	(inch-H_2O)	(dB(A))	(g)	
MF17080V1-1000U-A99	●	5	93	0.47	21000	0.9	0.28	21.5	3.9	1
MF17080V2-1000U-A99	●	5	66	0.33	16500	0.7	0.17	14.2	3.9	2

Function

R Type : F99 ／ F Type : G99 ／ PWM : H99, Q99, S99

Air Flow-Static Pressure Characteristics

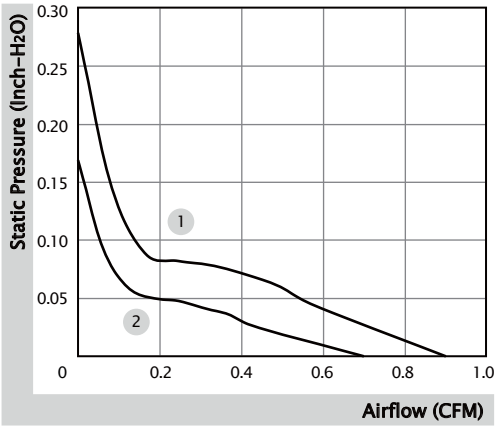

External Dimensions(mm)

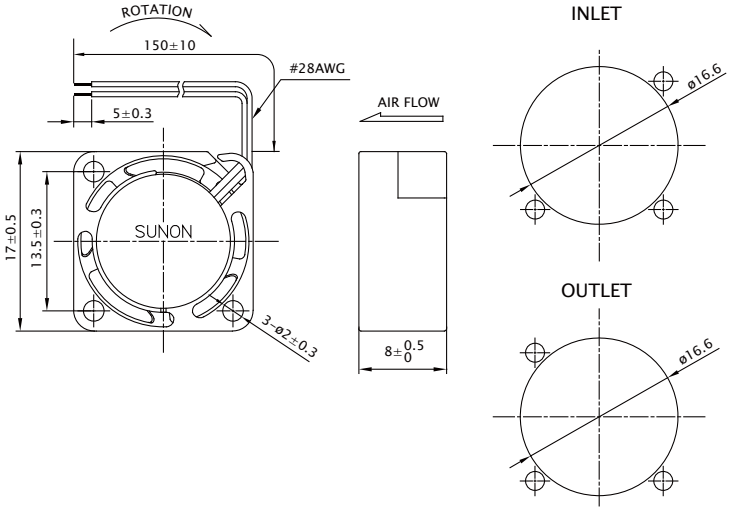

※ All model can be customized. Please contact Sunon Sales.

※ Specifications are subject to change without notice. Please Visit SUNON website at www.sunon.com for update information.

20x20x6 mm

0.3~1.1 CFM

Specification

MAGLev by SUNON	Bearing	Rated Voltage	Power Current	Power Consumption	Speed	Airflow	Static Pressure	Noise	Weight	Curve
	● VAPO	(VDC)	(mA)	(WATTS)	(RPM)	(CFM)	(inch-H_2O)	(dB(A))	(g)	
MF20060V1-1000U-A99	●	5	63	0.32	15500	1.1	0.21	24.5	3.4	1
MF20060V2-1000U-A99	●	5	32	0.16	10000	0.7	0.08	15.0	3.4	2
MF20060V3-1000U-A99	●	5	19	0.10	6200	0.3	0.03	4.2	3.4	3

Function

R Type : F99 ／ F Type : G99 ／ PWM : Q99, S99

Air Flow-Static Pressure Characteristics

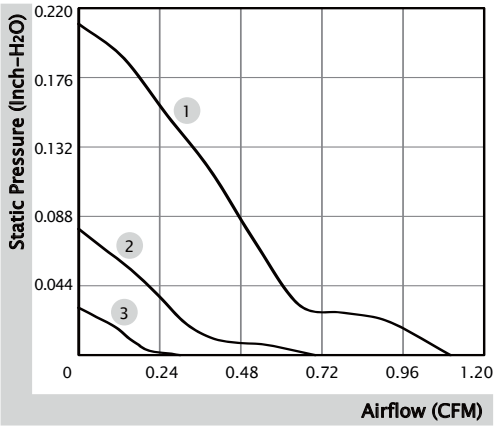

External Dimensions(mm)

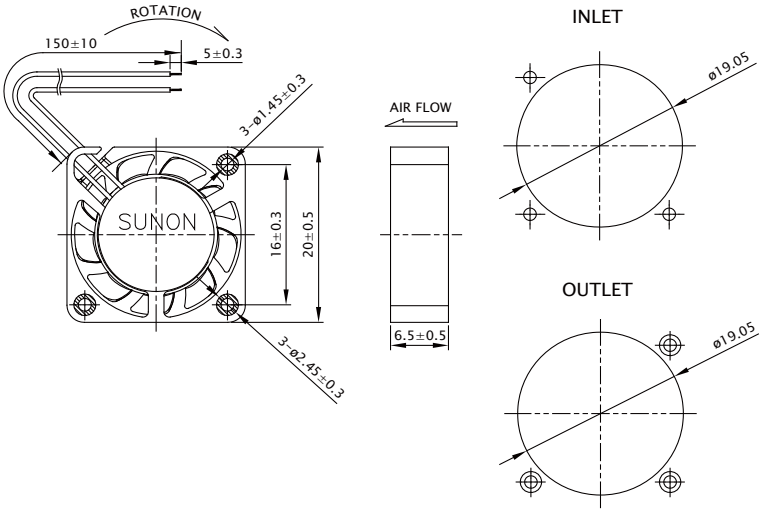

※ All model can be customized. Please contact Sunon Sales.

※ Specifications are subject to change without notice. Please Visit SUNON website at www.sunon.com for update information.

20x20x8 mm

1.3~1.6 CFM

Specification

MAGLev by SUNON	Bearing	Rated Voltage	Power Current	Power Consumption	Speed	Airflow	Static Pressure	Noise	Weight	Curve
	● VAPO	(VDC)	(mA)	(WATTS)	(RPM)	(CFM)	(inch-H_2O)	(dB(A))	(g)	
MF20080V1-1000U-A99	●	5	90	0.45	15000	1.6	0.24	23.0	4.0	1
MF20080V2-1000U-A99	●	5	68	0.34	12000	1.3	0.15	21.0	4.0	2

Function

R Type : F99 ／ F Type : G99 ／ PWM : H99, Q99, S99

Air Flow-Static Pressure Characteristics

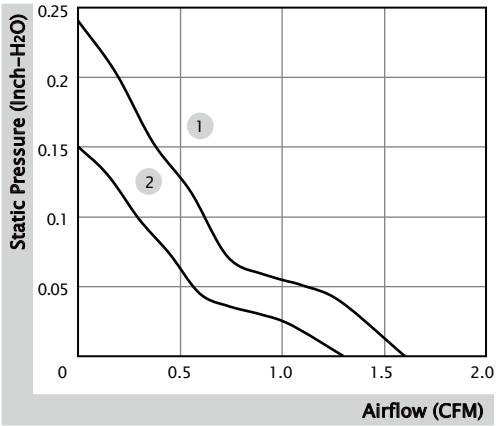

External Dimensions(mm)

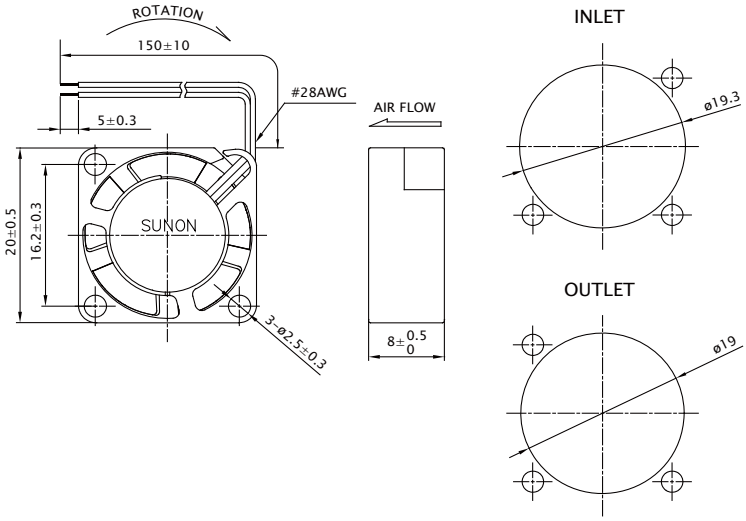

※ All model can be customized. Please contact Sunon Sales.

※ Specifications are subject to change without notice. Please Visit SUNON website at www.sunon.com for update information.

20x20x10 mm

1.5~1.9 CFM

Specification

MAGLev by SUNON	Bearing	Rated Voltage	Power Current	Power Consumption	Speed	Airflow	Static Pressure	Noise	Weight	Curve
	● VAPO	(VDC)	(mA)	(WATTS)	(RPM)	(CFM)	(inch-H_2O)	(dB(A))	(g)	
MF20100V1-1000U-A99	●	5	106	0.53	16500	1.9	0.29	25.0	4.65	1
MF20100V2-1000U-A99	●	5	80	0.40	14000	1.5	0.20	20.0	4.65	2

Function

R Type : F99 ／ F Type : G99 ／ PWM : H99, Q99, S99

Air Flow-Static Pressure Characteristics

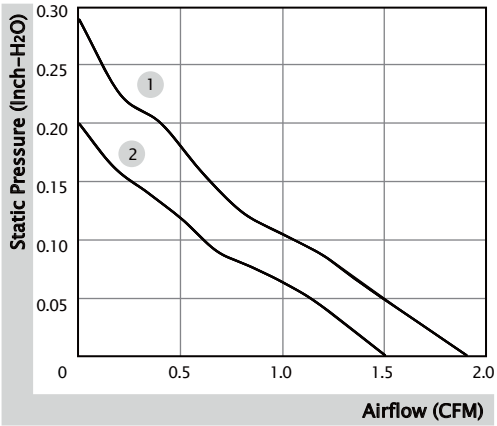

External Dimensions(mm)

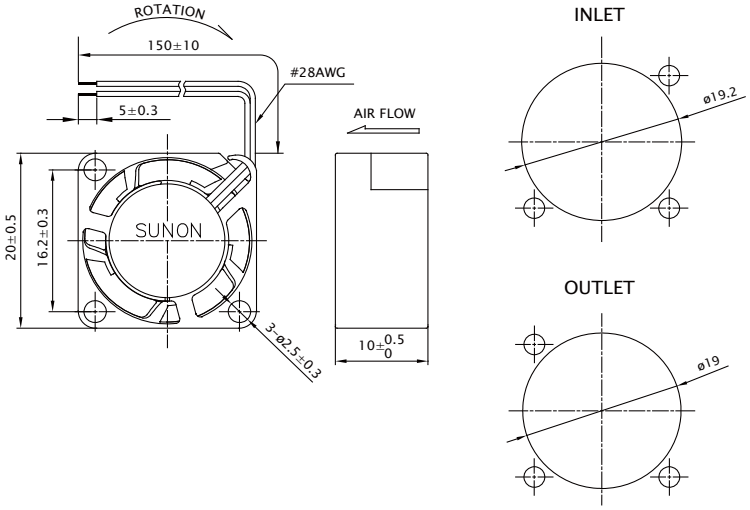

※ All model can be customized. Please contact Sunon Sales.

※ Specifications are subject to change without notice. Please Visit SUNON website at www.sunon.com for update information.

25x25x6 mm

2.2~3.0 CFM

Specification

MAGLev by SUNON	Bearing	Rated Voltage	Power Current	Power Consumption	Speed	Airflow	Static Pressure	Noise	Weight	Curve
	● VAPO	(VDC)	(mA)	(WATTS)	(RPM)	(CFM)	(inch-H_2O)	(dB(A))	(g)	
MF25060V1-1000U-A99	●	5	115	0.58	13000	3.0	0.23	24.8	5.0	1
MF25060V2-1000U-A99	●	5	75	0.38	10000	2.2	0.16	18.0	5.0	2

Function

R Type : F99 ／ F Type : G99 ／ PWM : H99, Q99, S99

Air Flow-Static Pressure Characteristics

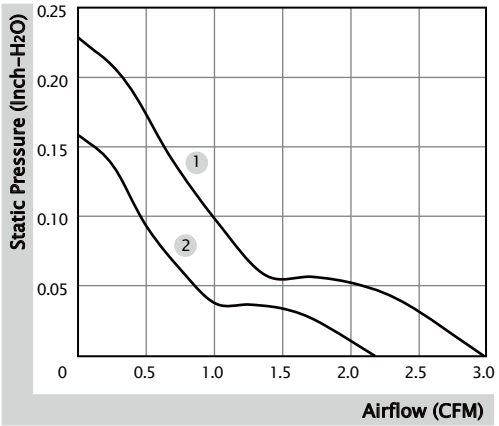

External Dimensions(mm)

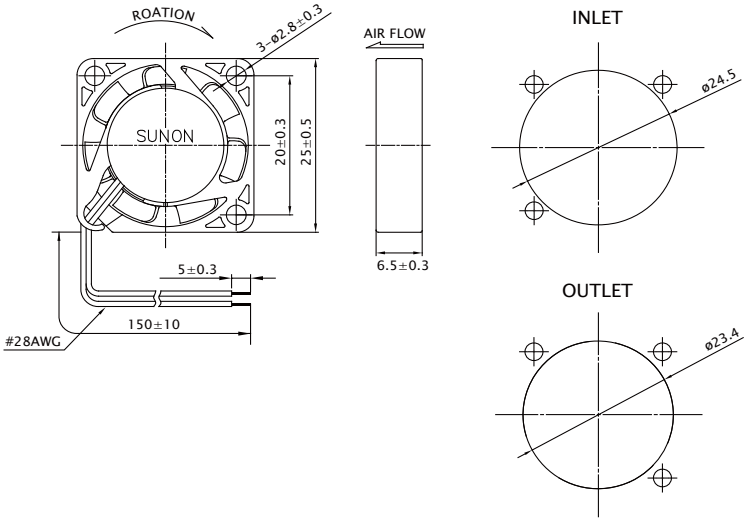

※ All model can be customized. Please contact Sunon Sales.

※ Specifications are subject to change without notice. Please Visit SUNON website at www.sunon.com for update information.

25x25x10 mm

1.2~3.8 CFM

Specification

MAGLev by SUNON	Bearing	Rated Voltage	Power Current	Power Consumption	Speed	Airflow	Static Pressure	Noise	Weight	Curve
	● VAPO	(VDC)	(mA)	(WATTS)	(RPM)	(CFM)	(inch-H_2O)	(dB(A))	(g)	
MF25100V1-1000U-A99	●	5	105	0.53	13000	3.5	0.25	23.0	6.9	2
MF25100V2-1000U-A99	●	5	65	0.33	9800	3.0	0.18	16.0	6.9	3
MF25100V3-1000U-A99	●	5	40	0.20	6800	1.3	0.07	8.8	6.9	4
MF25101V1-1000U-A99	●	12	50	0.60	14000	3.8	0.27	26.0	6.8	1
MF25101V2-1000U-A99	●	12	30	0.36	9600	3.0	0.18	16.0	6.8	3
MF25101V3-1000U-A99	●	12	17	0.21	6000	1.2	0.05	4.8	6.8	5

Function

(5V) R Type : F99 ／ F Type : G99 ／ PWM : H99, Q99, S99
(12V) R Type : F99 ／ F Type : G99

Air Flow-Static Pressure Characteristics

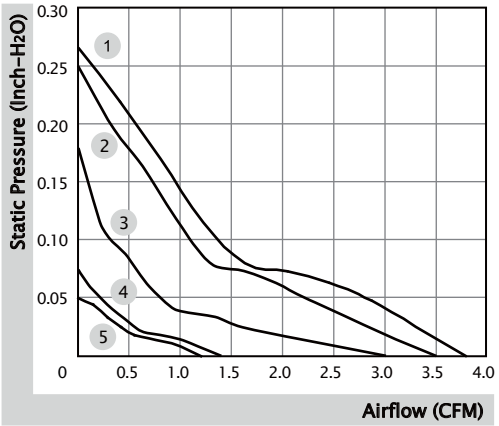

External Dimensions(mm)

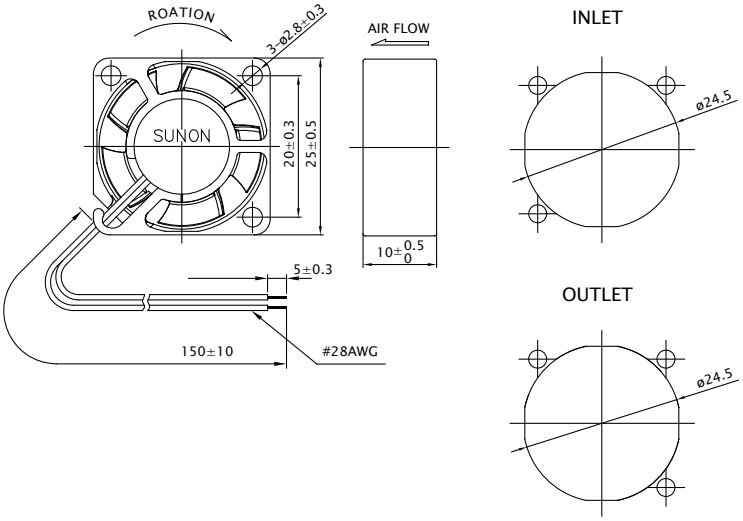

※ All model can be customized. Please contact Sunon Sales.
※ Specifications are subject to change without notice. Please Visit SUNON website at www.sunon.com for update information.

25x25x15 mm

1.3~3.1 CFM

Specification

MAGLev by SUNON	Bearing	Rated Voltage	Power Current	Power Consumption	Speed	Airflow	Static Pressure	Noise	Weight	Curve
	● VAPO	(VDC)	(mA)	(WATTS)	(RPM)	(CFM)	(inch-H_2O)	(dB(A))	(g)	
MF25150V1-1000U-A99	●	5	85	0.43	10000	3.1	0.16	20.0	9.4	1
MF25150V2-1000U-A99	●	5	46	0.23	6800	2.2	0.11	11.3	9.4	2
MF25150V3-1000U-A99	●	5	35	0.18	5300	1.3	0.04	4.5	9.4	3

Function

R Type : F99 ／ F Type : G99 ／ PWM : H99, Q99, S99

Air Flow-Static Pressure Characteristics

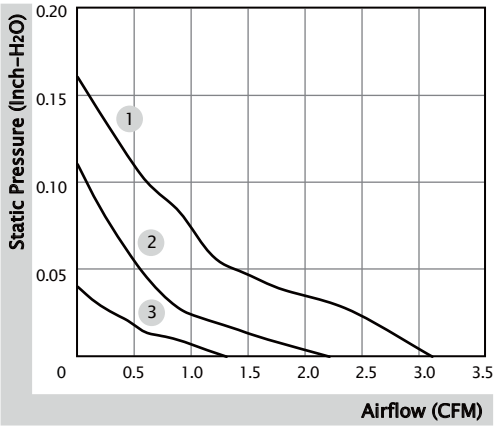

External Dimensions(mm)

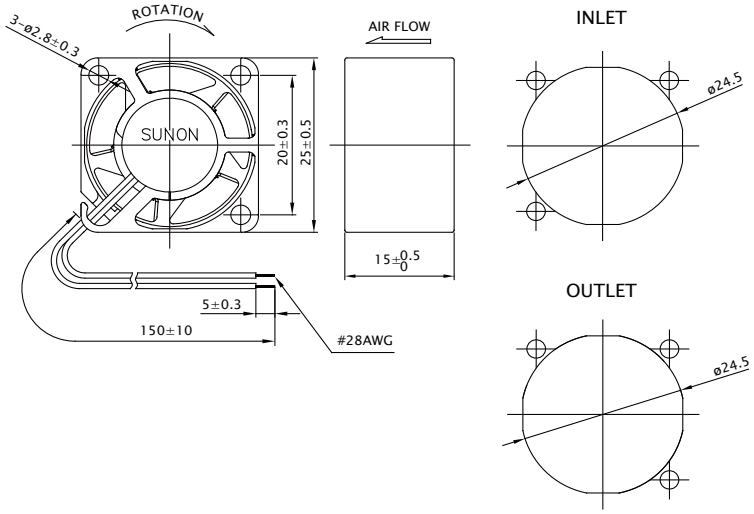

※ All model can be customized. Please contact Sunon Sales.

※ Specifications are subject to change without notice. Please Visit SUNON website at www.sunon.com for update information.

30x30x6 mm

3.7~4.9 CFM

Specification

MAGLev by SUNON	Bearing	Rated Voltage	Power Current	Power Consumption	Speed	Airflow	Static Pressure	Noise	Weight	Curve
	● VAPO	(VDC)	(mA)	(WATTS)	(RPM)	(CFM)	(inch-H_2O)	(dB(A))	(g)	
MF30060V1-1000U-A99	●	5	112	0.56	9100	4.9	0.17	23.6	6.0	1
MF30060V2-1000U-A99	●	5	72	0.36	7100	3.7	0.11	15.7	6.0	2

Function

R Type : F99 ／ F Type : G99 ／ PWM : H99, Q99, S99

Air Flow-Static Pressure Characteristics

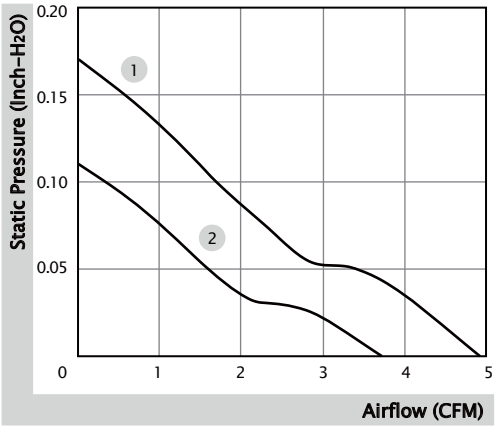

External Dimensions(mm)

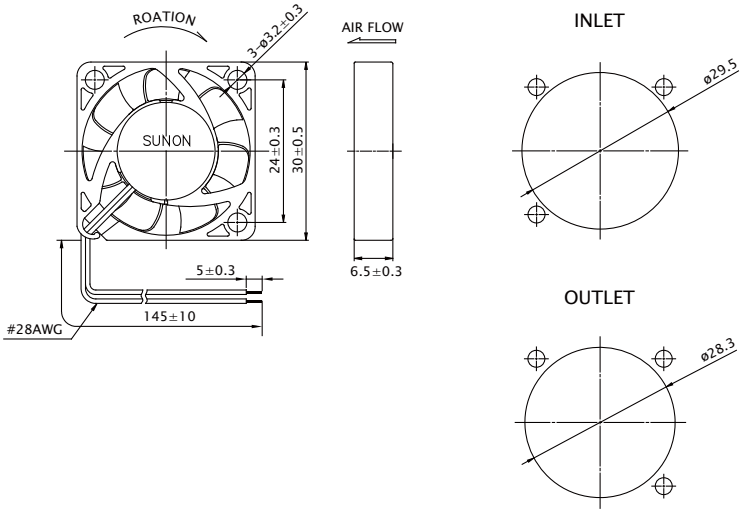

※ All model can be customized. Please contact Sunon Sales.

※ Specifications are subject to change without notice. Please Visit SUNON website at www.sunon.com for update information.

30x30x10 mm

2.5~5.5 CFM

Specification

MAGLev by SUNON	Bearing	Rated Voltage	Power Current	Power Consumption	Speed	Airflow	Static Pressure	Noise	Weight	Curve
	● VAPO	(VDC)	(mA)	(WATTS)	(RPM)	(CFM)	(inch-H_2O)	(dB(A))	(g)	
MF30100V1-1000U-A99	●	5	120	0.60	11000	5.5	0.20	23.0	7.8	2
MF30100V2-1000U-A99	●	5	80	0.40	9500	4.7	0.17	21.0	7.8	3
MF30100V3-1000U-A99	●	5	45	0.23	6000	2.5	0.07	10.2	7.8	5
MF30101V1-1000U-A99	●	12	55	0.66	11500	5.5	0.25	23.0	7.8	1
MF30101V2-1000U-A99	●	12	32	0.39	8600	4.6	0.14	20.0	7.8	4

Function

(5V) R Type : F99 ／ F Type : G99 ／ PWM : H99, Q99, S99
(12V) R Type : F99 ／ F Type : G99

Air Flow-Static Pressure Characteristics

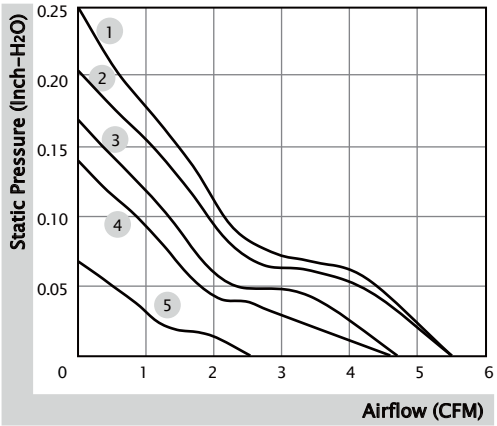

External Dimensions(mm)

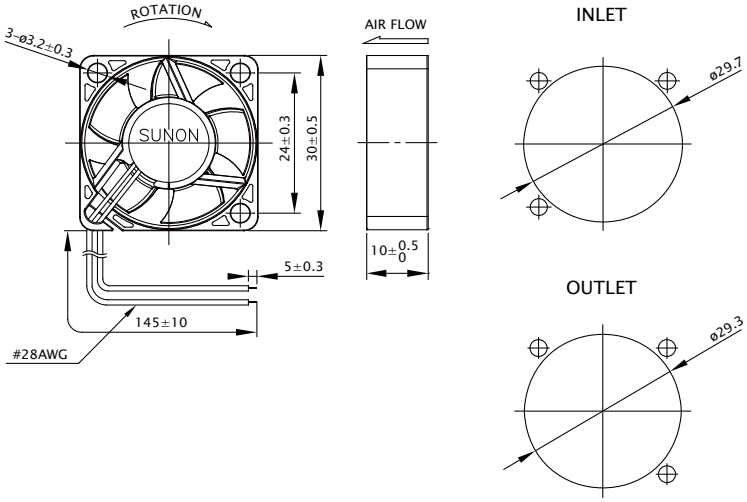

※ All model can be customized. Please contact Sunon Sales.
※ Specifications are subject to change without notice. Please Visit SUNON website at www.sunon.com for update information.

30x30x10 mm

3.5 CFM

Specification

MAGLev by SUNON	Bearing	Rated Voltage	Power Current	Power Consumption	Speed	Airflow	Static Pressure	Noise	Weight	Curve
	● VAPO	(VDC)	(mA)	(WATTS)	(RPM)	(CFM)	(inch-H_2O)	(dB(A))	(g)	
HA30101V3-1000U-A99	●	12	25	0.30	7000	3.5	0.10	15.1	7.8	1

Function

R Type : F99 ／ F Type : G99

Air Flow-Static Pressure Characteristics

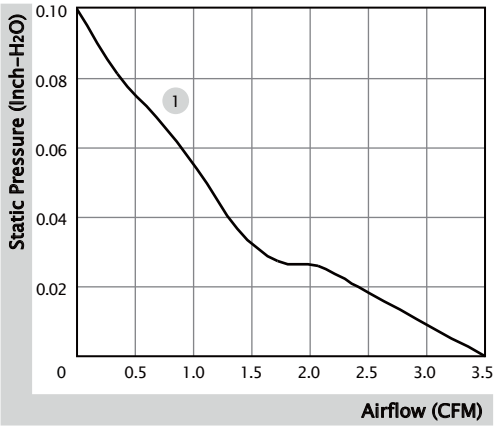

External Dimensions(mm)

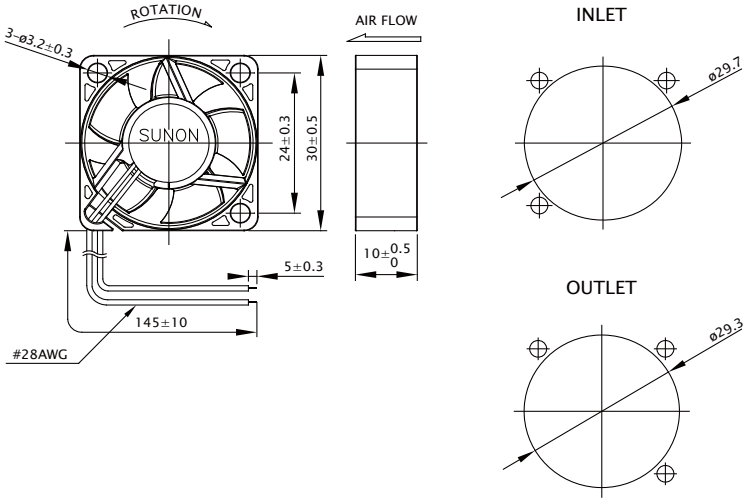

※ All model can be customized. Please contact Sunon Sales.

※ Specifications are subject to change without notice. Please Visit SUNON website at www.sunon.com for update information.

30x30x15 mm

2.7~6.0 CFM

Specification

MAGLev by SUNON	Bearing	Rated Voltage	Power Current	Power Consumption	Speed	Airflow	Static Pressure	Noise	Weight	Curve
	● VAPO	(VDC)	(mA)	(WATTS)	(RPM)	(CFM)	(inch-H_2O)	(dB(A))	(g)	
MF30150V1-1000U-A99	●	5	140	0.70	9500	6.0	0.17	27.0	9.7	1
MF30150V2-1000U-A99	●	5	80	0.40	7300	4.9	0.12	20.0	9.7	2
MF30150V3-1000U-A99	●	5	45	0.23	5200	2.8	0.05	9.8	9.7	3
MF30151V1-1000U-A99	●	12	65	0.78	9500	6.0	0.17	27.0	9.7	1
MF30151V2-1000U-A99	●	12	35	0.42	7000	4.8	0.12	19.0	9.7	2
MF30151V3-1000U-A99	●	12	20	0.24	4600	2.7	0.05	7.8	9.7	3

Function

(5V) R Type : F99 ／ F Type : G99 ／ PWM : H99, Q99, S99
(12V) R Type : F99 ／ F Type : G99

Air Flow-Static Pressure Characteristics

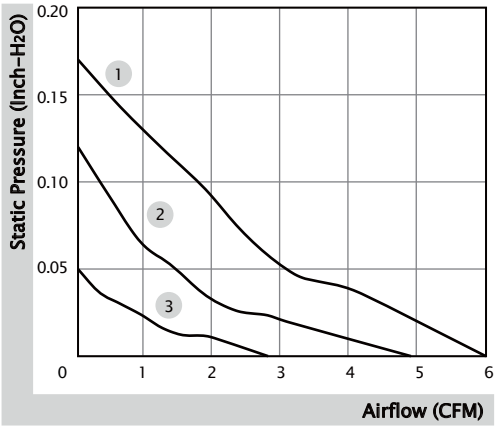

External Dimensions(mm)

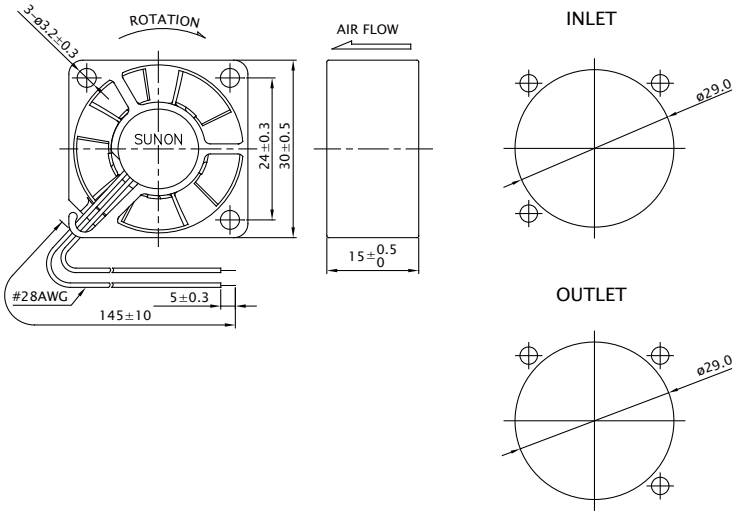

※ All model can be customized. Please contact Sunon Sales.
※ Specifications are subject to change without notice. Please Visit SUNON website at www.sunon.com for update information.

35x35x6 mm

4.3~5.5 CFM

Specification

MAGLev by SUNON	Bearing	Rated Voltage	Power Current	Power Consumption	Speed	Airflow	Static Pressure	Noise	Weight	Curve
	● VAPO	(VDC)	(mA)	(WATTS)	(RPM)	(CFM)	(inch-H_2O)	(dB(A))	(g)	
MF35060V1-1000U-A99	●	5	120	0.60	7600	5.5	0.11	26.0	7.0	1
MF35060V2-1000U-A99	●	5	66	0.33	5800	4.3	0.07	18.3	7.0	2

Function

R Type : F99 ／ F Type : G99 ／ PWM : H99, Q99, S99

Air Flow-Static Pressure Characteristics

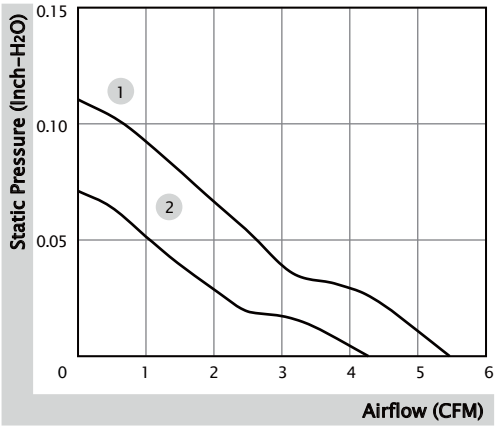

External Dimensions(mm)

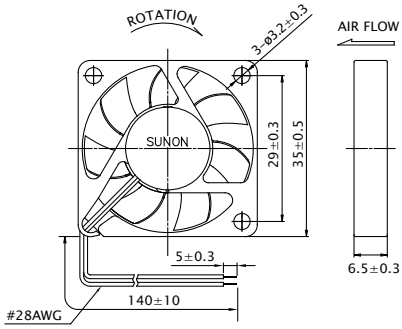

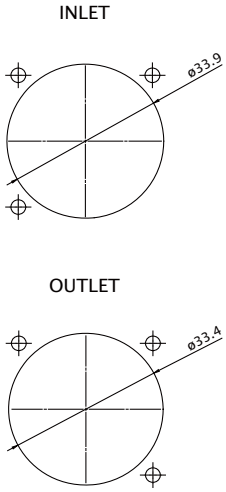

※ All model can be customized. Please contact Sunon Sales.

※ Specifications are subject to change without notice. Please Visit SUNON website at www.sunon.com for update information.

35x35x10 mm

3.6~7.2 CFM

Specification

MAGLev by SUNON	Bearing	Rated Voltage	Power Current	Power Consumption	Speed	Airflow	Static Pressure	Noise	Weight	Curve
	● VAPO	(VDC)	(mA)	(WATTS)	(RPM)	(CFM)	(inch-H_2O)	(dB(A))	(g)	
MF35100V1-1000U-A99	●	5	135	0.68	10000	7.2	0.22	28.0	10.5	1
MF35100V2-1000U-A99	●	5	80	0.40	7500	6.5	0.13	21.8	10.5	2
MF35100V3-1000U-A99	●	5	45	0.23	5300	3.7	0.07	13.1	10.5	3
MF35101V1-1000U-A99	●	12	60	0.72	10000	7.2	0.22	28.0	10.5	1
MF35101V2-1000U-A99	●	12	35	0.42	7500	6.5	0.13	21.8	10.5	2
MF35101V3-1000U-A99	●	12	20	0.24	5000	3.6	0.07	12.0	10.5	3

Function

(5V) R Type : F99 ／ F Type : G99 ／ PWM : H99, Q99, S99
(12V) R Type : F99 ／ F Type : G99

Air Flow-Static Pressure Characteristics

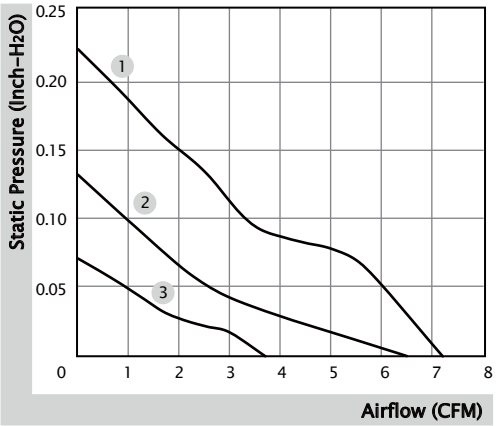

External Dimensions(mm)

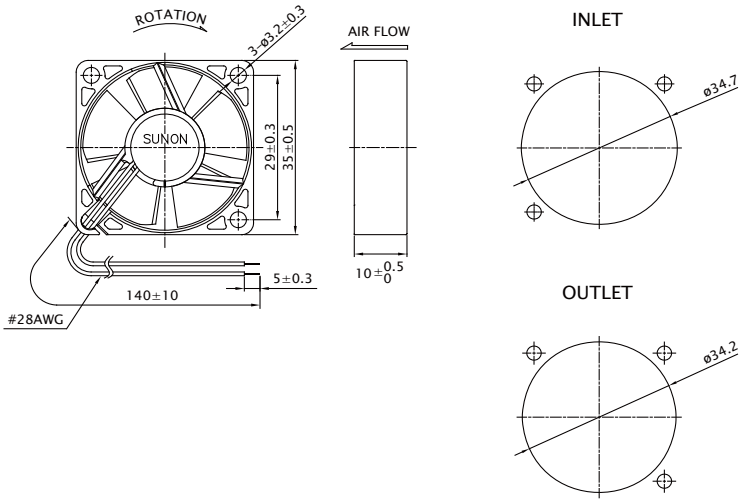

※ All model can be customized. Please contact Sunon Sales.
※ Specifications are subject to change without notice. Please Visit SUNON website at www.sunon.com for update information.

36x36x28 mm

18.1~22.8 CFM

Specification

Model	Bearing	Rated Voltage	Power Current	Power Consumption	Speed	Airflow	Static Pressure	Noise	Weight	Curve
	◉ 2BALL ○ Sleeve	(VDC)	(mA)	(WATTS)	(RPM)	(CFM)	(inch-H_2O)	(dB(A))	(g)	
PF36281BX-000U-A99	◉	12	800	9.60	23000	22.8	2.55	61.9	40.5	1
PF36281B1-000U-A99	◉	12	450	5.40	18400	18.1	1.62	55.7	40.5	2

Function

R Type : F99 ／ F Type : G99 ／ PWM : H99, Q99, S99

Air Flow-Static Pressure Characteristics

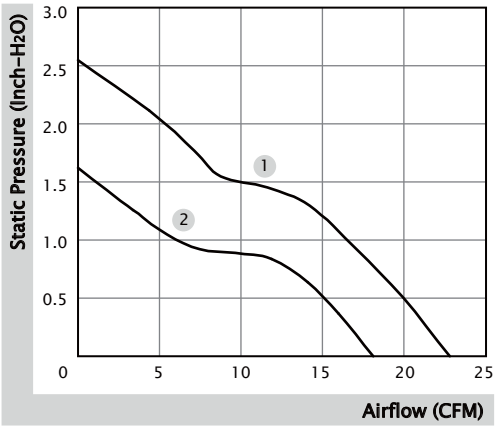

External Dimensions(mm)

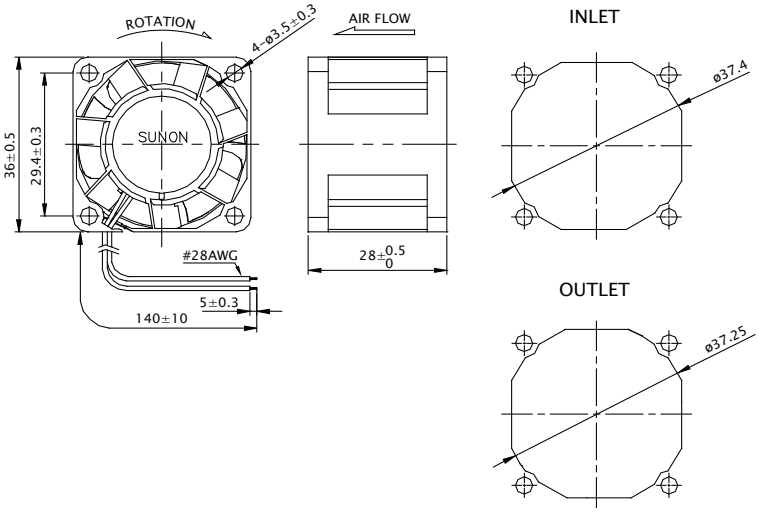

※ All model can be customized. Please contact Sunon Sales.

※ Specifications are subject to change without notice. Please Visit SUNON website at www.sunon.com for update information.

38x38x28 mm

11.3~23.0 CFM

Specification

Model	Bearing	Rated Voltage	Power Current	Power Consumption	Speed	Airflow	Static Pressure	Noise	Weight	Curve
	◉ 2BALL ○ Sleeve	(VDC)	(mA)	(WATTS)	(RPM)	(CFM)	(inch-H_2O)	(dB(A))	(g)	
PF38281BX-1000U-A9H	◉	12	570	6.84	20000	23.0	2.26	57.0	41.0	1
PF38281B1-1000U-A9H	◉	12	315	3.78	16000	18.1	1.54	51.8	41.0	2
PF38281B2-1000U-A9H	◉	12	265	3.18	15000	16.9	1.30	51.0	41.0	3
PF38281B3-1000U-A9H	◉	12	180	2.16	13000	14.9	1.03	47.3	41.0	4
PF38281B4-1000U-A9H	◉	12	95	1.14	10000	11.3	0.62	40.8	41.0	5

Function

R Type : F9H ／ F Type : G9H ／ PWM : H9H, Q9H, S9H

Air Flow-Static Pressure Characteristics

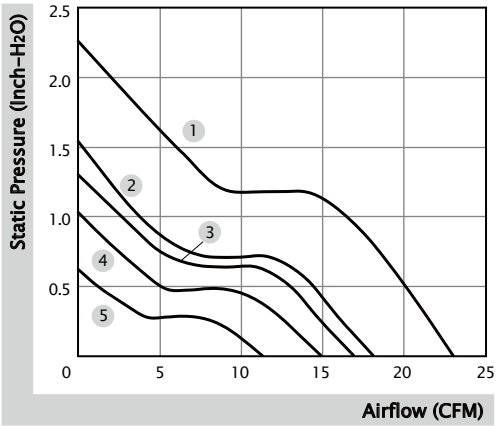

External Dimensions(mm)

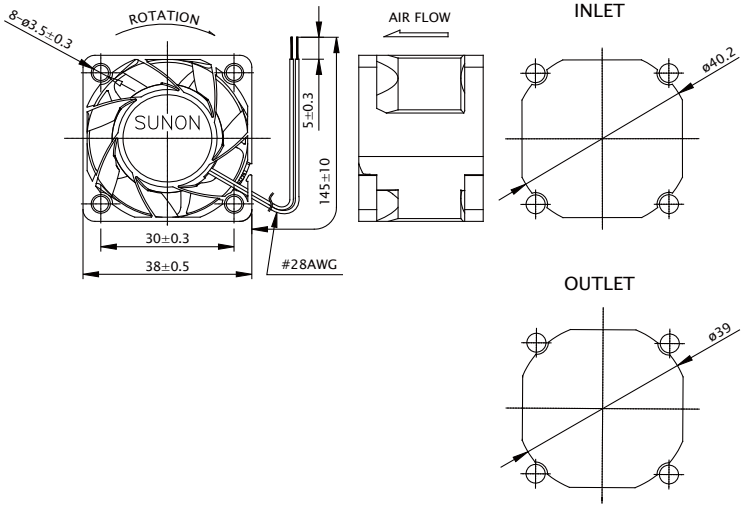

※ All model can be customized. Please contact Sunon Sales.

※ Specifications are subject to change without notice. Please Visit SUNON website at www.sunon.com for update information.

38x38x28 mm

18.9~24.2 CFM

Specification

Model	Bearing	Rated Voltage	Power Current	Power Consumption	Speed	Airflow	Static Pressure	Noise	Weight	Curve
	◐ 2BALL ○ Sleeve	(VDC)	(mA)	(WATTS)	(RPM)	(CFM)	(inch-H_2O)	(dB(A))	(g)	
VF38281BX-000U-A9H	◐	12	870	10.44	27000	24.2	3.56	61.6	44.0	1
VF38281B1-000U-A9H	◐	12	475	5.70	21600	18.9	2.50	58.1	44.0	2

Function F Type : G9H ／ PWM : S9H

Air Flow-Static Pressure Characteristics

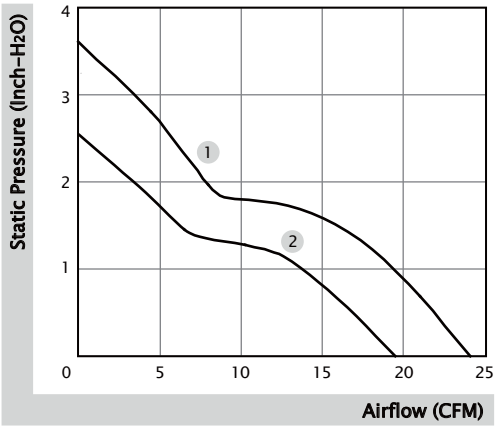

External Dimensions(mm)

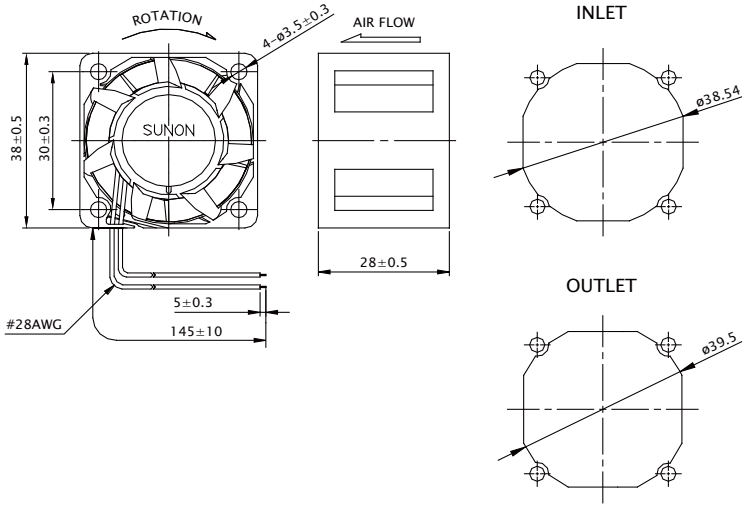

※ All model can be customized. Please contact Sunon Sales.

※ Specifications are subject to change without notice. Please Visit SUNON website at www.sunon.com for update information.

38x38x56 mm

31.2 CFM

Specification

Model	Bearing	Rated Voltage	Power Current	Power Consumption	Speed	Airflow	Static Pressure	Noise	Weight	Curve
	◉ 2BALL ○ Sleeve	(VDC)	(mA)	(WATTS)	(RPM)	(CFM)	(inch-H_2O)	(dB(A))	(g)	
VF38561BX-1000U-A9T	◉	12	1200	14.40	29300	31.2	4.60	61.6	66.0	1

Function

F Type : G9T ／ PWM : S9T

Air Flow-Static Pressure Characteristics

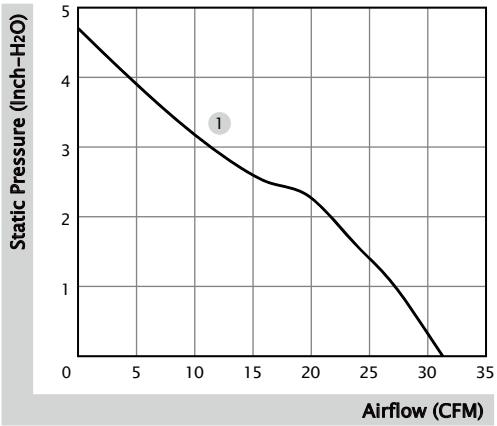

External Dimensions(mm)

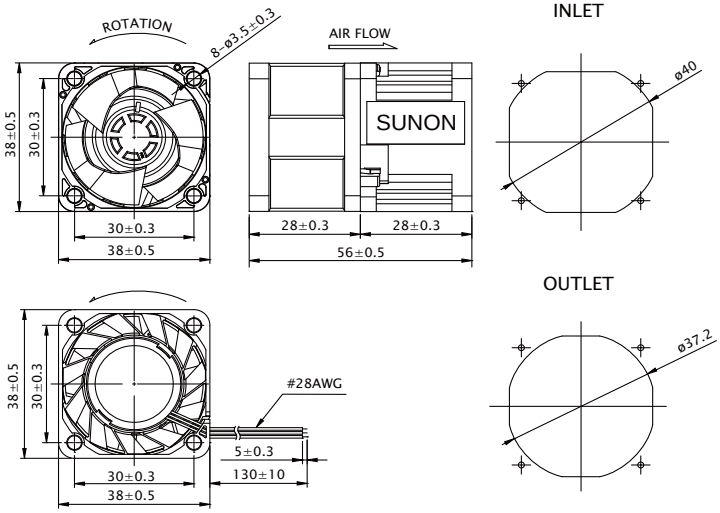

※ All model can be customized. Please contact Sunon Sales.

※ Specifications are subject to change without notice. Please Visit SUNON website at www.sunon.com for update information.

40x40x6 mm

5.5~6.3 CFM

Specification

MAGLev by SUNON	Bearing	Rated Voltage	Power Current	Power Consumption	Speed	Airflow	Static Pressure	Noise	Weight	Curve
	● VAPO	(VDC)	(mA)	(WATTS)	(RPM)	(CFM)	(inch-H_2O)	(dB(A))	(g)	
MF40060V1-1000U-A99	●	5	87	0.44	7000	6.3	0.10	29.3	6.8	1
MF40060V2-1000U-A99	●	5	65	0.33	6000	5.5	0.08	25.3	6.8	2

Function

R Type : F99 ／ F Type : G99 ／ PWM : H99, Q99, S99

Air Flow-Static Pressure Characteristics

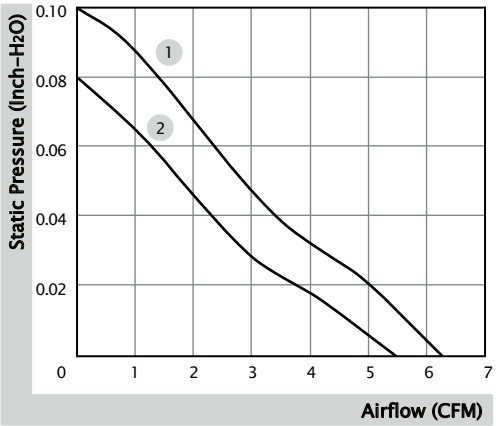

External Dimensions(mm)

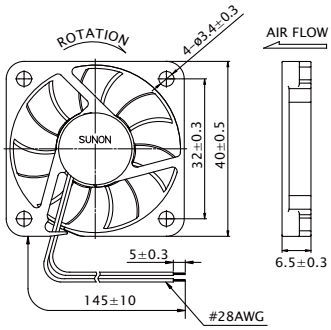

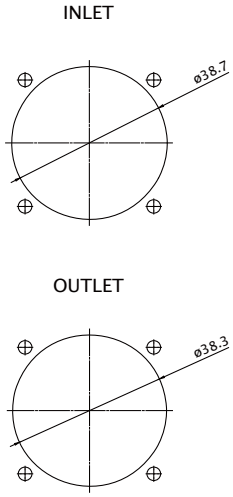

※ All model can be customized. Please contact Sunon Sales.

※ Specifications are subject to change without notice. Please Visit SUNON website at www.sunon.com for update information.

40x40x10 mm

7.0~9.9 CFM

Specification

MAGLev by SUNON	Bearing	Rated Voltage	Power Current	Power Consumption	Speed	Airflow	Static Pressure	Noise	Weight	Curve
	● VAPO	(VDC)	(mA)	(WATTS)	(RPM)	(CFM)	(inch-H_2O)	(dB(A))	(g)	
MF40100V1-1000U-A99	●	5	136	0.68	7000	8.0	0.19	27.3	15.6	2
MF40100V2-1000U-A99	●	5	94	0.47	5800	7.0	0.12	20.6	15.6	3
MF40101VX-1000U-A99	●	12	87	1.05	8500	9.9	0.25	31.4	15.6	1
MF40101V1-1000U-A99	●	12	51	0.62	7000	8.0	0.19	27.3	15.6	2
MF40101V2-1000U-A99	●	12	40	0.48	5800	7.0	0.12	20.6	15.6	3

Function R Type : F99 ／ F Type : G99

Air Flow-Static Pressure Characteristics

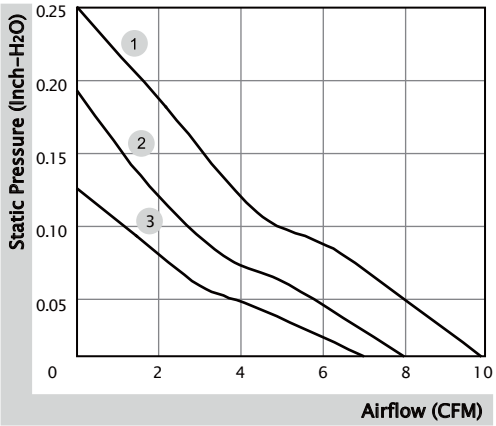

External Dimensions(mm)

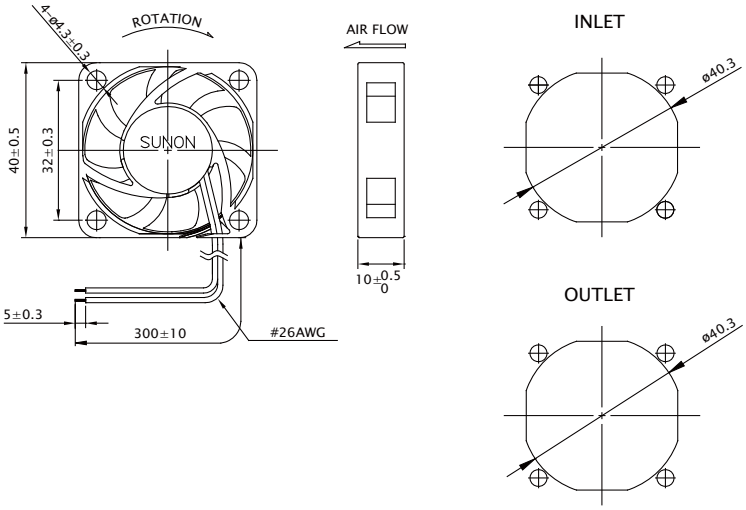

※ All model can be customized. Please contact Sunon Sales.

※ Specifications are subject to change without notice. Please Visit SUNON website at www.sunon.com for update information.

40x40x10 mm

5.5~10.0 CFM

Specification

Model	Bearing	Rated Voltage	Power Current	Power Consumption	Speed	Airflow	Static Pressure	Noise	Weight	Curve
	◉ 2BALL ○ Sleeve	(VDC)	(mA)	(WATTS)	(RPM)	(CFM)	(inch-H_2O)	(dB(A))	(g)	
EF40101BX-1000U-A99	◉	12	122	1.47	9000	10.0	0.27	33.7	15.8	1
EF40101B1-1000U-A99	◉	12	82	0.99	7000	8.0	0.19	27.3	15.8	2
EF40101B2-1000U-A99	◉	12	37	0.45	5000	5.5	0.10	17.7	15.8	3

Function R Type : F99 ／ F Type : G99

Air Flow-Static Pressure Characteristics

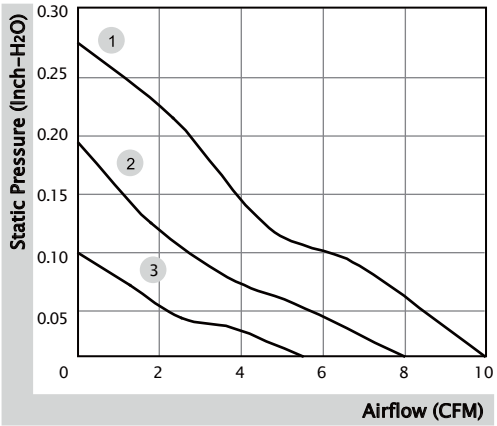

External Dimensions(mm)

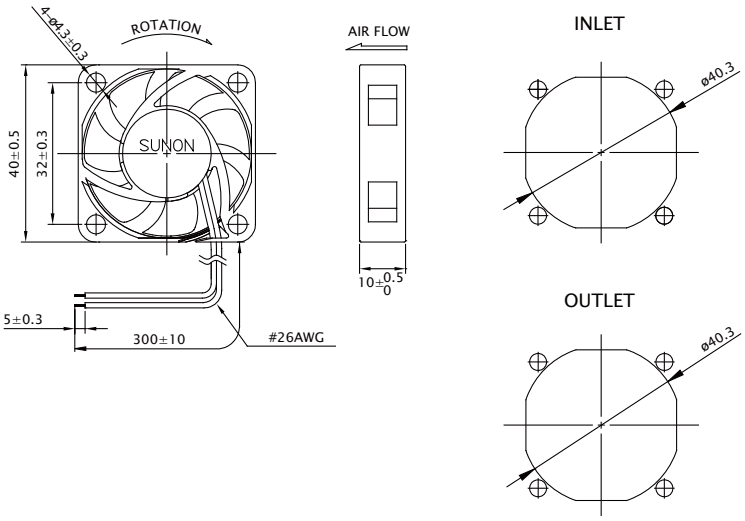

※ All model can be customized. Please contact Sunon Sales.

※ Specifications are subject to change without notice. Please Visit SUNON website at www.sunon.com for update information.

40x40x10 mm

for Automative Application

7.5 CFM

Specification

MAGLev by SUNON	Bearing	Rated Voltage	Power Current	Power Consumption	Speed	Airflow	Static Pressure	Noise	Weight	Curve
	● VAPO	(VDC)	(mA)	(WATTS)	(RPM)	(CFM)	(inch-H_2O)	(dB(A))	(g)	
AF40100VX-1000U-A99	●	5	120	0.60	8000	7.5	0.21	30.7	15.5	1
AF40101VX-1000U-A99	●	12	65	0.78	8000	7.5	0.21	30.7	15.5	1

Function

F Type : G99 ／ PWM : S99
IP52 : AL9, GL9, SL9

Air Flow-Static Pressure Characteristics

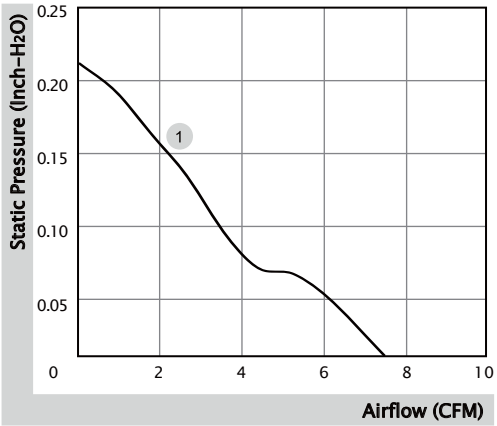

External Dimensions(mm)

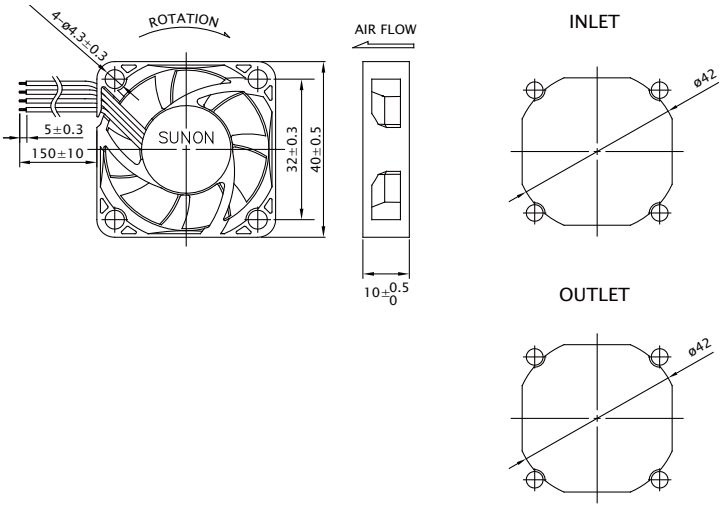

※ All model can be customized. Please contact Sunon Sales.
※ Specifications are subject to change without notice. Please Visit SUNON website at www.sunon.com for update information.

40x40x10 mm

7.1~8.2 CFM

Specification

Model	Bearing	Rated Voltage	Power Current	Power Consumption	Speed	Airflow	Static Pressure	Noise	Weight	Curve
	◉ 2BALL ○ Sleeve	(VDC)	(mA)	(WATTS)	(RPM)	(CFM)	(inch-H_2O)	(dB(A))	(g)	
EE40100S1-1000U-999	○	5	172	0.86	7300	8.2	0.19	28.2	15.6	1
EE40100S2-1000U-999	○	5	120	0.60	6100	7.1	0.12	23.0	15.6	2
EE40101S1-1000U-999	○	12	82	0.99	7300	8.2	0.19	28.2	15.6	1
EE40101S2-1000U-999	○	12	68	0.82	6100	7.1	0.12	23.0	15.6	2

Function F Type : C99

Air Flow-Static Pressure Characteristics

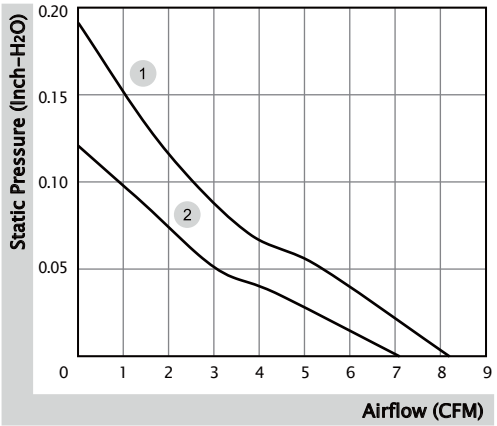

External Dimensions(mm)

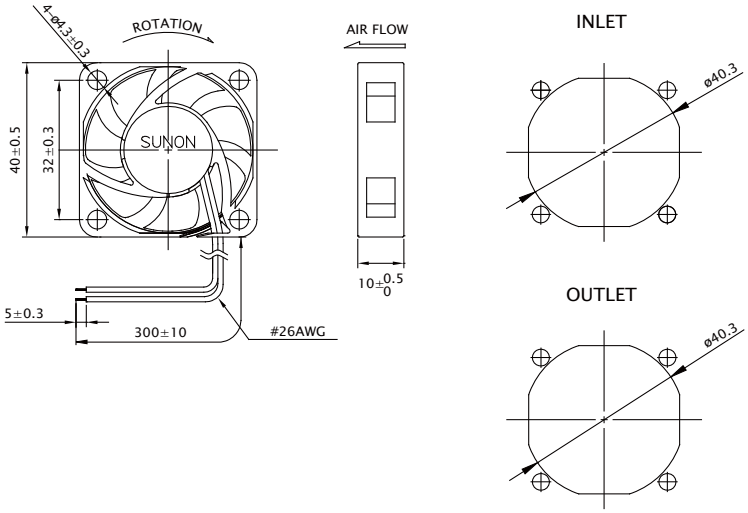

※ All model can be customized. Please contact Sunon Sales.

※ Specifications are subject to change without notice. Please Visit SUNON website at www.sunon.com for update information.

40x40x10 mm

5.4 CFM

Specification

MAGLev by SUNON	Bearing	Rated Voltage	Power Current	Power Consumption	Speed	Airflow	Static Pressure	Noise	Weight	Curve
	● VAPO	(VDC)	(mA)	(WATTS)	(RPM)	(CFM)	(inch-H_2O)	(dB(A))	(g)	
HA40101V4-1000U-A99	●	12	31	0.38	5000	5.4	0.09	15.7	15.4	1

Function F Type : G99

Air Flow-Static Pressure Characteristics

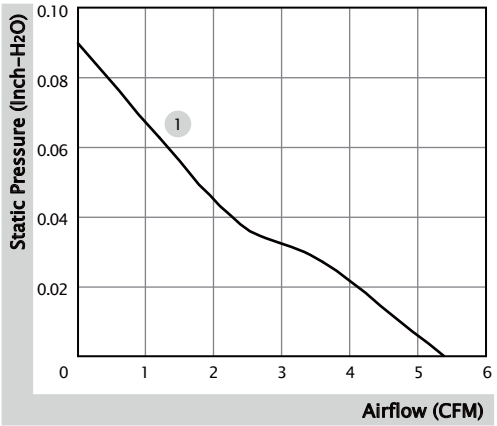

External Dimensions(mm)

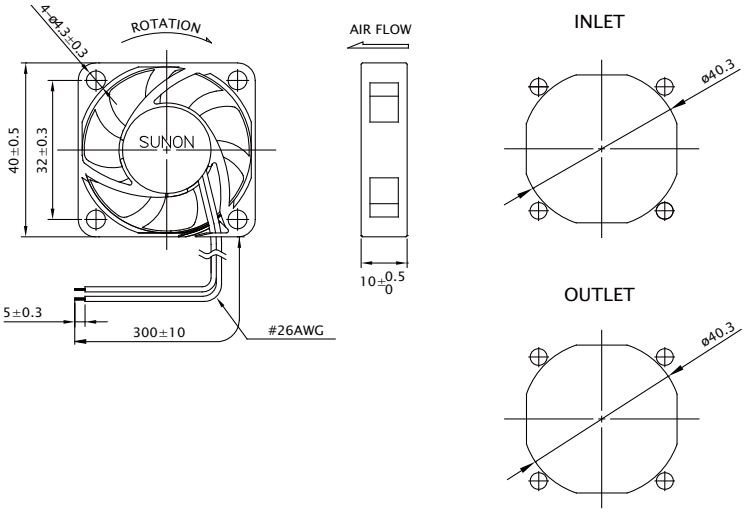

※ All model can be customized. Please contact Sunon Sales.

※ Specifications are subject to change without notice. Please Visit SUNON website at www.sunon.com for update information.

40x40x20 mm

for Automative Application

Meets AEC-Q100
EMC CISPR 25 Class 2 Protection

11.0 CFM

Specification

MAGLev by SUNON	Bearing	Rated Voltage	Power Current	Power Consumption	Speed	Airflow	Static Pressure	Noise	Weight	Curve
	● VAPO	(VDC)	(mA)	(WATTS)	(RPM)	(CFM)	(inch-H_2O)	(dB(A))	(g)	
AF40200VX-1000U-A99	●	5	180	0.90	8600	11.0	0.31	30.5	27.0	1
AF40201VX-1000U-A99	●	12	76	0.92	8600	11.0	0.31	30.5	27.0	1

Function

F Type : G99 ／ PWM : S99
IP52 : AL9, GL9, SL9

Air Flow-Static Pressure Characteristics

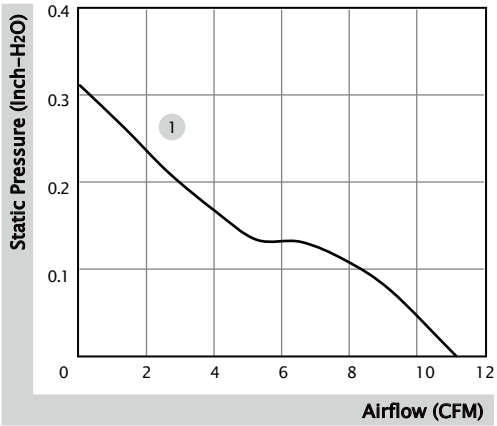

External Dimensions(mm)

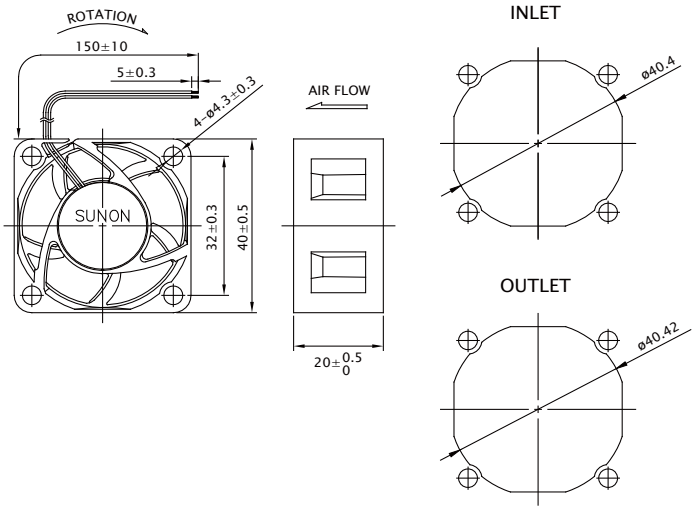

※ All model can be customized. Please contact Sunon Sales.
※ Specifications are subject to change without notice. Please Visit SUNON website at www.sunon.com for update information.

40x40x20 mm

6.3~10.8 CFM

Specification

MAGLev by SUNON	Bearing	Rated Voltage	Power Current	Power Consumption	Speed	Airflow	Static Pressure	Noise	Weight	Curve
	● VAPO	(VDC)	(mA)	(WATTS)	(RPM)	(CFM)	(inch-H_2O)	(dB(A))	(g)	
MF40200V1-1000U-A99	●	5	150	0.75	7000	8.9	0.22	25.5	29.0	2
MF40200V2-1000U-A99	●	5	107	0.54	6000	7.7	0.17	21.0	29.0	3
MF40200V3-1000U-A99	●	5	75	0.38	5000	6.3	0.11	16.5	29.0	4
MF40201VX-1000U-A99	●	12	80	0.96	8000	10.8	0.29	27.5	29.0	1
MF40201V1-1000U-A99	●	12	58	0.70	7000	8.9	0.22	25.5	29.0	2
MF40201V2-1000U-A99	●	12	45	0.54	6000	7.7	0.17	21.0	29.0	3
MF40201V3-1000U-A99	●	12	38	0.46	5000	6.3	0.11	16.5	29.0	4
MF40202VX-1000U-A99	●	24	39	0.94	8000	10.8	0.29	27.5	29.0	1
MF40202V1-1000U-A99	●	24	32	0.77	7000	8.9	0.22	25.5	29.0	2
MF40202V2-1000U-A99	●	24	25	0.60	6000	7.7	0.17	21.0	29.0	3
Model	2BALL ○ Sleeve	(VDC)	(mA)	(WATTS)	(RPM)	(CFM)	(inch-H_2O)	(dB(A))	(g)	
EE40201SX-1000U-999	○	12	105	1.26	8000	10.8	0.29	27.5	29.0	1
EE40201S1-1000U-999	○	12	80	0.96	7000	8.9	0.22	25.5	29.0	2
EE40201S2-1000U-999	○	12	63	0.76	6000	7.7	0.17	21.0	29.0	3
EE40201S3-1000U-999	○	12	52	0.63	5000	6.3	0.11	16.5	29.0	4

Function

(MF Series) R Type : F99 ／ F Type : G99
(EE Series) F Type : C99

Air Flow-Static Pressure Characteristics

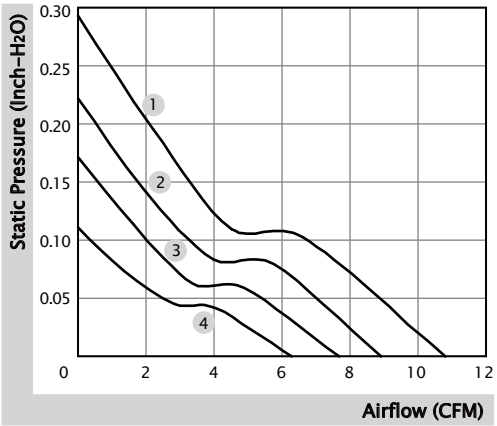

External Dimensions(mm)

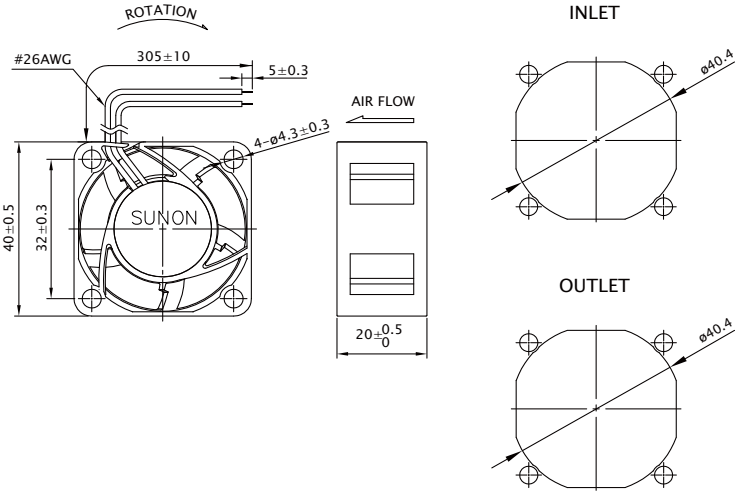

※ All model can be customized. Please contact Sunon Sales.
※ Specifications are subject to change without notice. Please Visit SUNON website at www.sunon.com for update information.

40x40x20 mm

6.3~10.8 CFM

Specification

Model	Bearing	Rated Voltage	Power Current	Power Consumption	Speed	Airflow	Static Pressure	Noise	Weight	Curve
	◉ 2BALL ○ Sleeve	(VDC)	(mA)	(WATTS)	(RPM)	(CFM)	(inch-H_2O)	(dB(A))	(g)	
EF40201BX-1000U-A99	◉	12	65	0.78	8200	10.8	0.32	28.5	32.5	1
EF40201B1-1000U-A99	◉	12	55	0.66	7200	8.9	0.24	24.5	32.5	2
EF40201B2-1000U-A99	◉	12	40	0.48	6200	7.7	0.18	21.3	32.5	3
EF40201B3-1000U-A99	◉	12	35	0.42	5200	6.3	0.14	16.2	32.5	4

Function

R Type : F99 ／ F Type : G99 ／ PWM : H99, Q99, S99

Air Flow-Static Pressure Characteristics

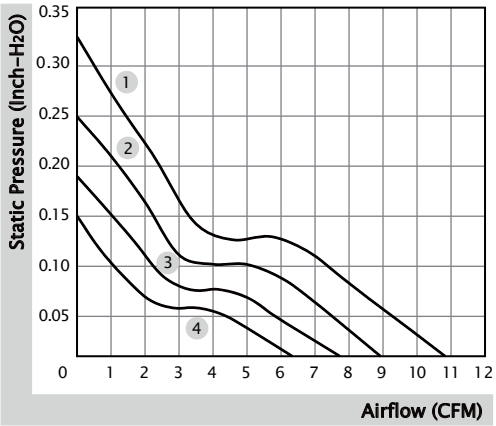

External Dimensions(mm)

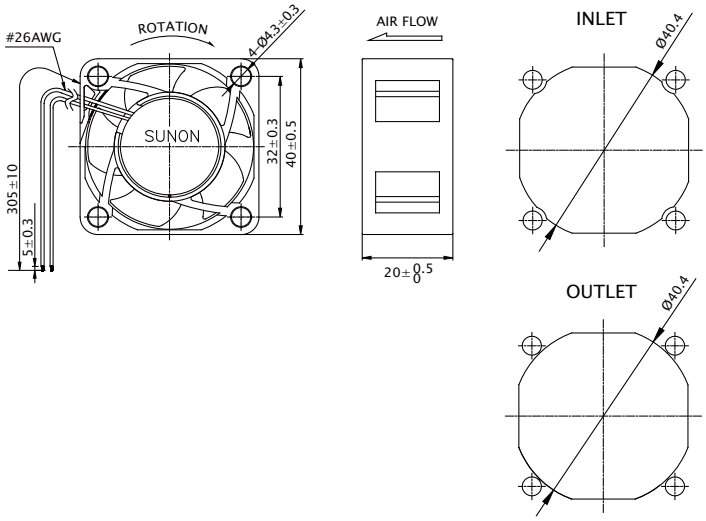

※ All model can be customized. Please contact Sunon Sales.

※ Specifications are subject to change without notice. Please Visit SUNON website at www.sunon.com for update information.

40x40x20 mm

5.5 CFM

Specification

MAGLev by SUNON	Bearing	Rated Voltage	Power Current	Power Consumption	Speed	Airflow	Static Pressure	Noise	Weight	Curve
	● VAPO	(VDC)	(mA)	(WATTS)	(RPM)	(CFM)	(inch-H_2O)	(dB(A))	(g)	
HA40201V4-1000U-A99	●	12	31	0.38	4500	5.5	0.10	12.3	30.6	1

Function F Type : G99

Air Flow-Static Pressure Characteristics

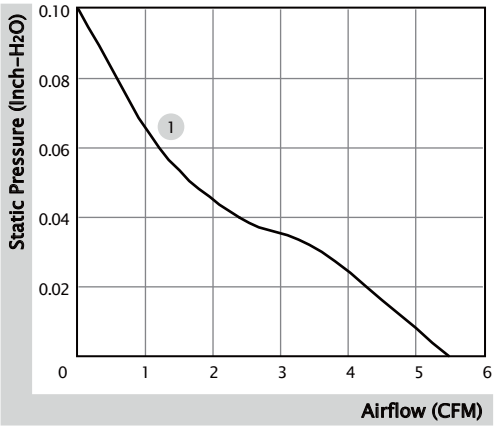

External Dimensions(mm)

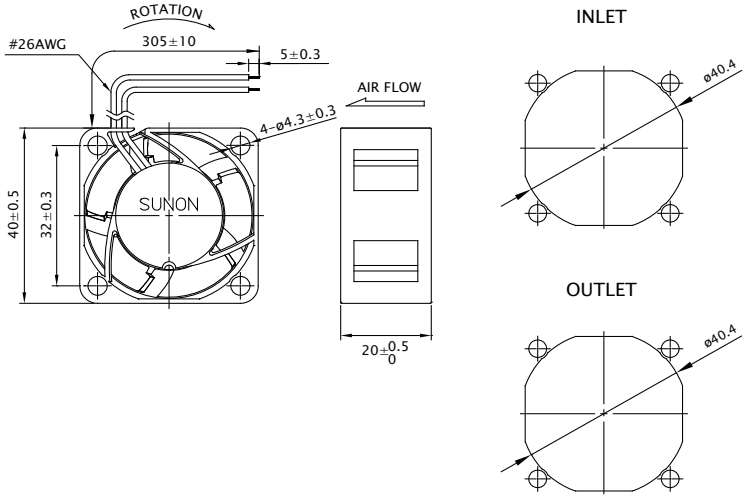

※ All model can be customized. Please contact Sunon Sales.

※ Specifications are subject to change without notice. Please Visit SUNON website at www.sunon.com for update information.

40x40x28 mm

25.6~31.5 CFM

Specification

Model	Bearing	Rated Voltage	Power Current	Power Consumption	Speed	Airflow	Static Pressure	Noise	Weight	Curve
	◉ 2BALL ○ Sleeve	(VDC)	(mA)	(WATTS)	(RPM)	(CFM)	(inch-H_2O)	(dB(A))	(g)	
VF40281BX-000U-A9H	◉	12	1140	13.68	27000	31.5	3.95	63.7	46.0	1
VF40281B1-000U-A9H	◉	12	630	7.56	21600	25.6	2.77	58.6	46.0	2

Function F Type : G9H ／ PWM : S9H

Air Flow-Static Pressure Characteristics

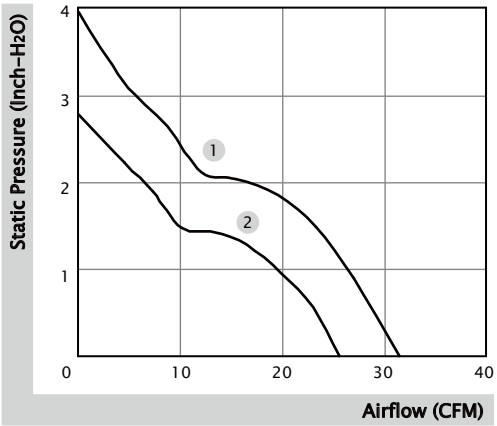

External Dimensions(mm)

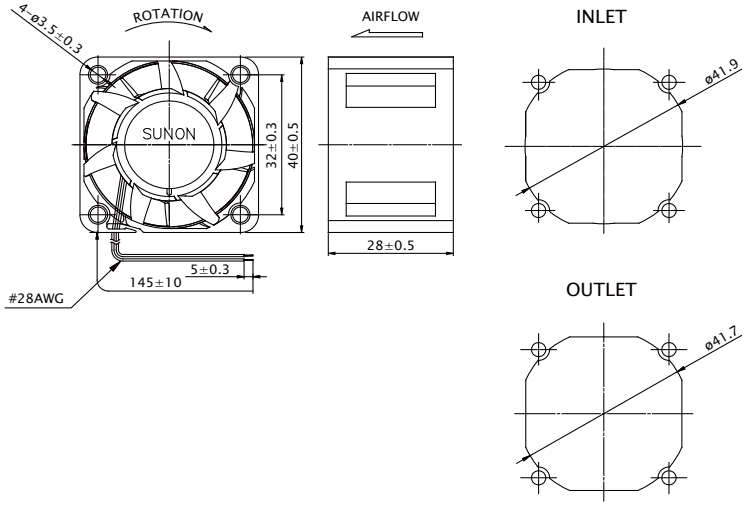

※ All model can be customized. Please contact Sunon Sales.

※ Specifications are subject to change without notice. Please Visit SUNON website at www.sunon.com for update information.

40x40x28 mm

24.9 CFM

Specification

MAGLev by SUNON	Bearing	Rated Voltage	Power Current	Power Consumption	Speed	Airflow	Static Pressure	Noise	Weight	Curve
	● VAPO	(VDC)	(mA)	(WATTS)	(RPM)	(CFM)	(inch-H_2O)	(dB(A))	(g)	
PF40281V1-000U-A99	●	12	740	8.88	17600	24.9	1.95	56.0	45.0	1

Function

F Type : G99 ／ PWM : S99

Air Flow-Static Pressure Characteristics

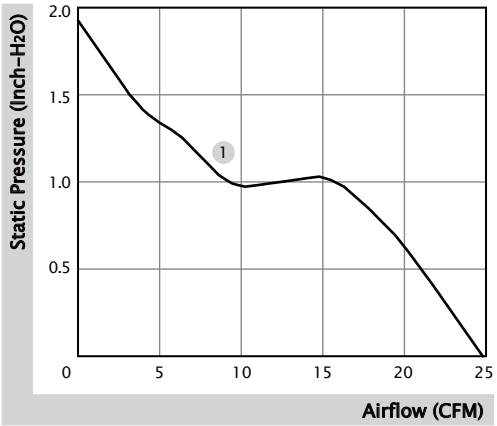

External Dimensions(mm)

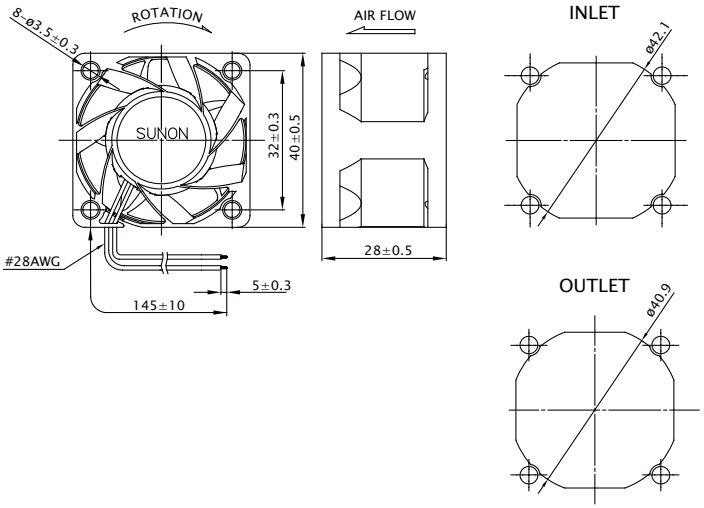

※ All model can be customized. Please contact Sunon Sales.

※ Specifications are subject to change without notice. Please Visit SUNON website at www.sunon.com for update information.

40x40x28 mm

12.8~31.3 CFM

Specification

Model	Bearing	Rated Voltage	Power Current	Power Consumption	Speed	Airflow	Static Pressure	Noise	Weight	Curve
	◉ 2BALL ○ Sleeve	(VDC)	(mA)	(WATTS)	(RPM)	(CFM)	(inch-H_2O)	(dB(A))	(g)	
PF40281BX-1000U-A9H	◉	12	950	11.4	22000	31.3	3.12	62.0	42.0	1
PF40281B1-1000U-A9H	◉	12	510	6.12	17600	24.9	2.05	56.0	42.0	2
PF40281B2-1000U-A9H	◉	12	220	2.64	13000	18.0	1.16	48.7	42.0	3
PF40281B3-1000U-A9H	◉	12	145	1.74	11000	15.4	0.78	43.9	42.0	4
PF40281B4-1000U-A9H	◉	12	96	1.16	9200	12.8	0.60	39.9	42.0	5

Function

R Type : F9H ／ F Type : G9H ／ PWM : H9H, Q9H, S9H

Air Flow-Static Pressure Characteristics

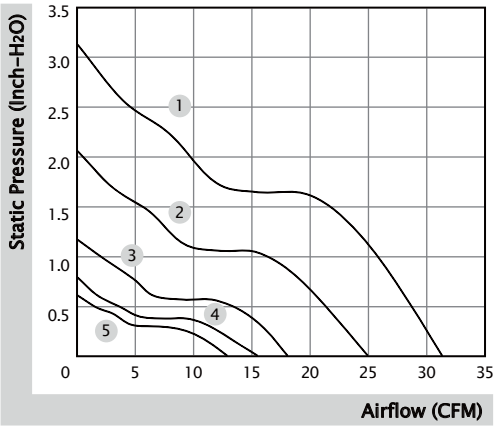

External Dimensions(mm)

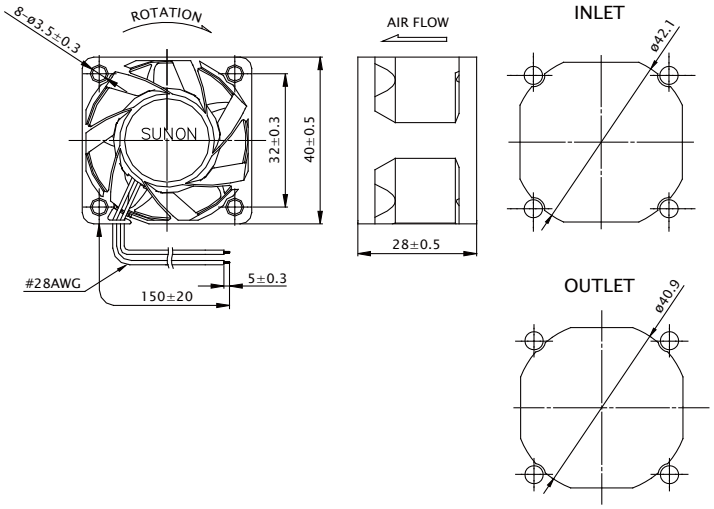

※ All model can be customized. Please contact Sunon Sales.

※ Specifications are subject to change without notice. Please Visit SUNON website at www.sunon.com for update information.

40x40x28 mm (IP68 / GR487)

14.1~23.9 CFM

Specification

Model	Bearing	Rated Voltage	Power Current	Power Consumption	Speed	Airflow	Static Pressure	Noise	Weight	Curve
	◉ 2BALL ○ Sleeve	(VDC)	(mA)	(WATTS)	(RPM)	(CFM)	(inch-H_2O)	(dB(A))	(g)	
GF40282BX-1000U-AEP	◉	24	400	9.60	17600	23.9	2.01	58.5	46.0	1
GF40282B1-1000U-AEP	◉	24	230	5.52	14600	19.6	1.38	52.8	46.0	2
GF40282B2-1000U-AEP	◉	24	180	4.32	13100	17.7	1.11	50.0	46.0	3
GF40282B3-1000U-AEP	◉	24	117	2.81	10500	14.1	0.71	45.0	46.0	4
GF40282BX-1000U-ADP	◉	24	400	9.60	17600	23.9	2.01	58.5	46.0	1
GF40282B1-1000U-ADP	◉	24	230	5.52	14600	19.6	1.38	52.8	46.0	2
GF40282B2-1000U-ADP	◉	24	180	4.32	13100	17.7	1.11	50.0	46.0	3
GF40282B3-1000U-ADP	◉	24	117	2.81	10500	14.1	0.71	45.0	46.0	4

Function

(IP68) R Type : FEP ／ F Type : GEP ／ PWM : HEP, QEP, SEP
(GR487) R Type : FDP ／ F Type : GDP ／ PWM : HDP, QDP, SDP

Air Flow-Static Pressure Characteristics

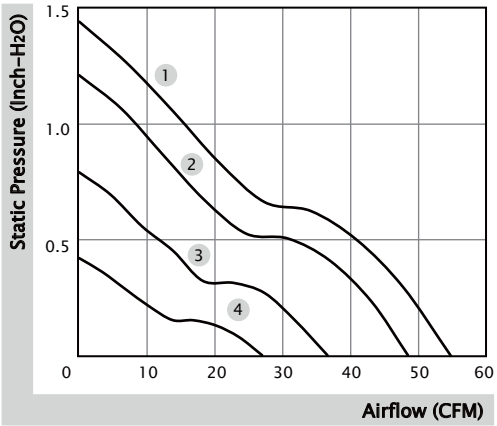

External Dimensions(mm)

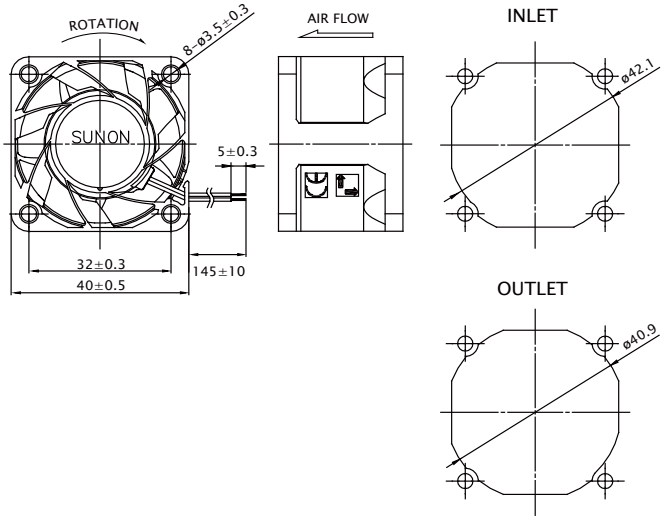

※ All model can be customized. Please contact Sunon Sales.
※ Specifications are subject to change without notice. Please Visit SUNON website at www.sunon.com for update information.

40x40x56 mm

26.9~31.7 CFM

Specification

Model	Bearing	Rated Voltage	Power Current	Power Consumption	Speed	Airflow	Static Pressure	Noise	Weight	Curve
	◉ 2BALL ○ Sleeve	(VDC)	(mA)	(WATTS)	(RPM)	(CFM)	(inch-H_2O)	(dB(A))	(g)	
PF40561BX-1000U-A9H	◉	12	1390	16.68	21500/18000	31.7	3.76	65.9	87.0	1
PF40561B1-1000U-A9H	◉	12	890	10.68	18000/15000	26.9	2.64	62.3	87.0	2

Function

R Type : F9H ／ F Type : G9H ／ PWM : H9H, Q9H, S9H

External dimensions(mm)

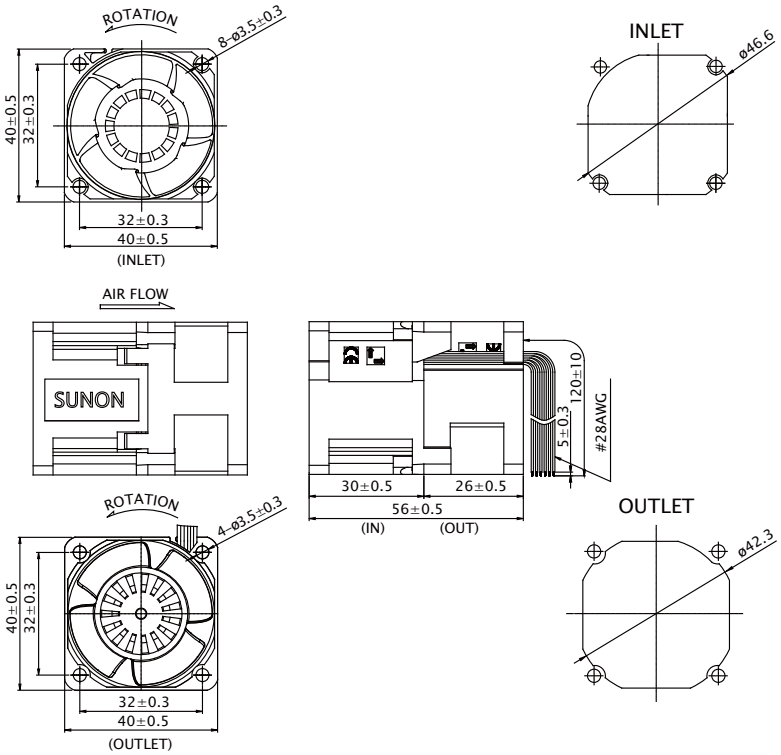

Air Flow-Static Pressure Characteristics

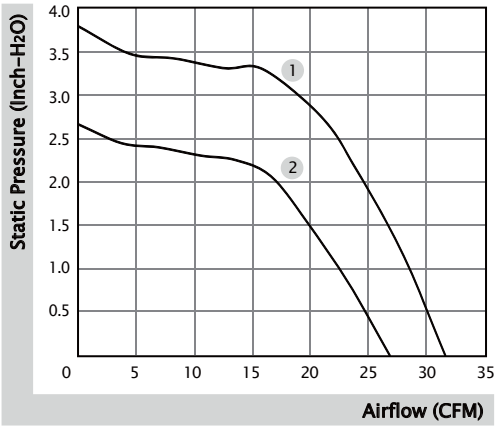

※ All model can be customized. Please contact Sunon Sales.

※ Specifications are subject to change without notice. Please Visit SUNON website at www.sunon.com for update information.

40x40x56 mm

19.7~25.0 CFM

Specification

Model	Bearing	Rated Voltage	Power Current	Power Consumption	Speed	Airflow	Static Pressure	Noise	Weight	Curve
	◐ 2BALL ○ Sleeve	(VDC)	(mA)	(WATTS)	(RPM)	(CFM)	(inch-H_2O)	(dB(A))	(g)	
VG40561BX-000U-A9H	◐	12	1400	16.80	25500/22300	25.0	6.19	65.0	87.0	1
VG40561B1-000U-A9H	◐	12	750	9.00	20400/17800	19.7	4.16	62.5	87.0	2

Function F Type : G9H ／ PWM : S9H

Air Flow-Static Pressure Characteristics

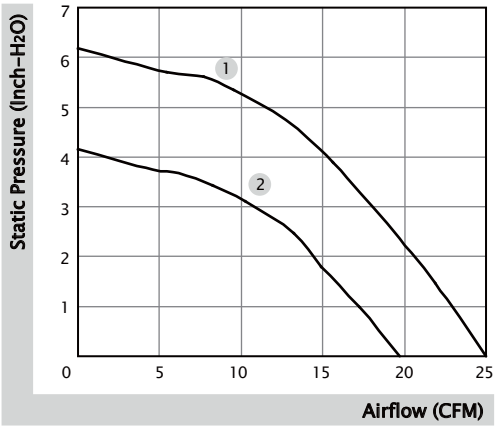

External Dimensions(mm)

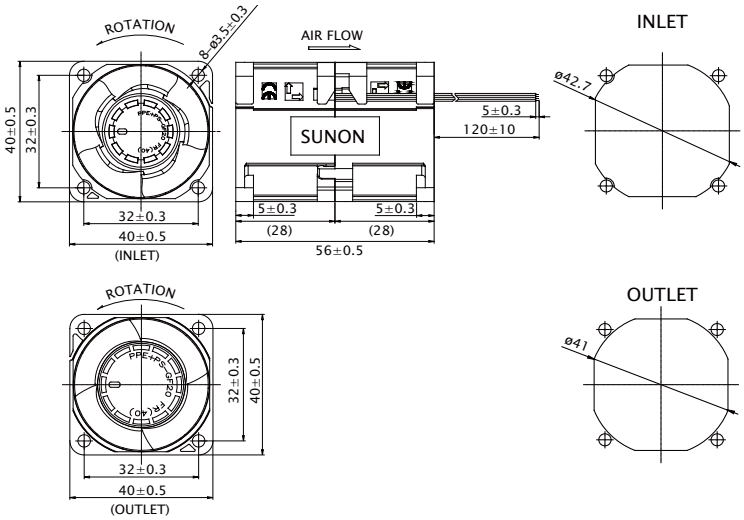

※ All model can be customized. Please contact Sunon Sales.

※ Specifications are subject to change without notice. Please Visit SUNON website at www.sunon.com for update information.

45x45x10 mm

9.4~12.4 CFM

Specification

MAGLev by SUNON	Bearing	Rated Voltage	Power Current	Power Consumption	Speed	Airflow	Static Pressure	Noise	Weight	Curve
	● VAPO	(VDC)	(mA)	(WATTS)	(RPM)	(CFM)	(inch-H_2O)	(dB(A))	(g)	
MF45100V1-1000U-A99	●	5	205	1.03	6500	12.4	0.18	32.5	16.0	1
MF45100V2-1000U-A99	●	5	102	0.51	5000	9.4	0.12	26.1	16.0	3
MF45101V1-1000U-A99	●	12	100	1.20	6500	12.4	0.18	32.5	16.0	1
* MF45101V2-1000U-A99	●	12	47	0.57	5000	9.4	0.12	26.1	16.0	3
Model	2BALL ○ Sleeve	(VDC)	(mA)	(WATTS)	(RPM)	(CFM)	(inch-H_2O)	(dB(A))	(g)	
EF45101S1-1000U-999	○	12	85	1.02	5700	10.8	0.16	29.8	16.0	2
EF45101S2-1000U-999	○	12	60	0.72	5000	9.4	0.12	26.1	16.0	3

Function

(MF Series) R Type : F99 ／ F Type : G99 ／ PWM : H99, Q99, S99
(EF Series) F Type : C99

*MF45101V2-1000U-A99 only available : R Type : F99 ／ F Type : G99

Air Flow-Static Pressure Characteristics

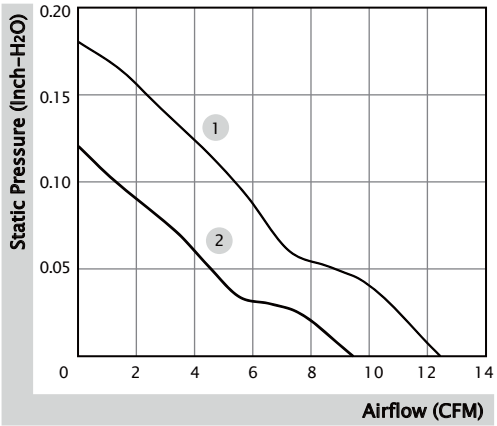

External Dimensions(mm)

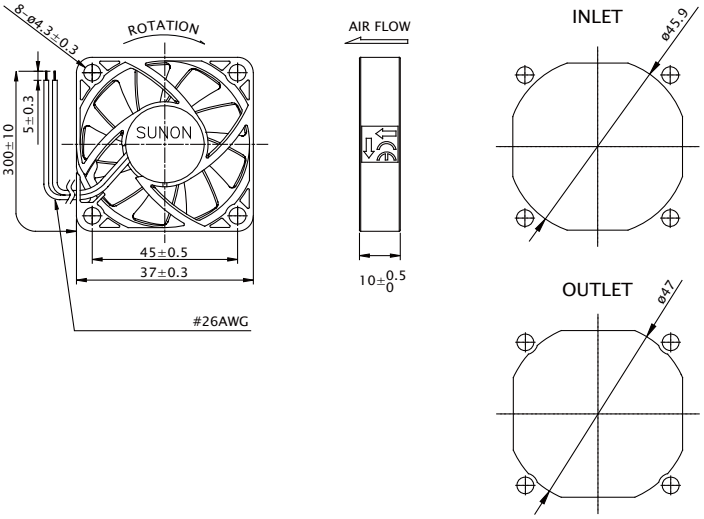

※ All model can be customized. Please contact Sunon Sales.
※ Specifications are subject to change without notice. Please Visit SUNON website at www.sunon.com for update information.

45x45x10 mm

9.4~10.8 CFM

Specification

Model	Bearing	Rated Voltage	Power Current	Power Consumption	Speed	Airflow	Static Pressure	Noise	Weight	Curve
	◉ 2BALL ○ Sleeve	(VDC)	(mA)	(WATTS)	(RPM)	(CFM)	(inch-H_2O)	(dB(A))	(g)	
EF45101S1-1000U-999	○	12	85	1.02	5700	10.8	0.16	29.8	16.0	1
EF45101S2-1000U-999	○	12	60	0.72	5000	9.4	0.12	26.1	16.0	2

Function F Type : C99

Air Flow-Static Pressure Characteristics

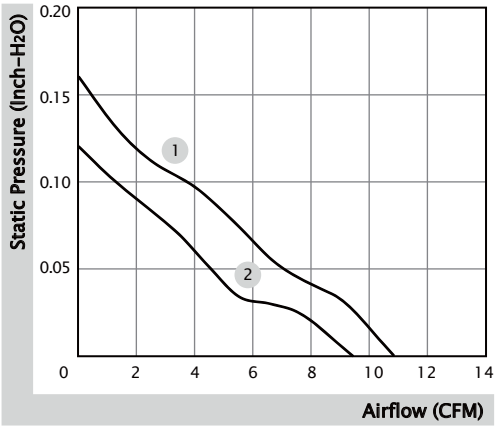

External Dimensions(mm)

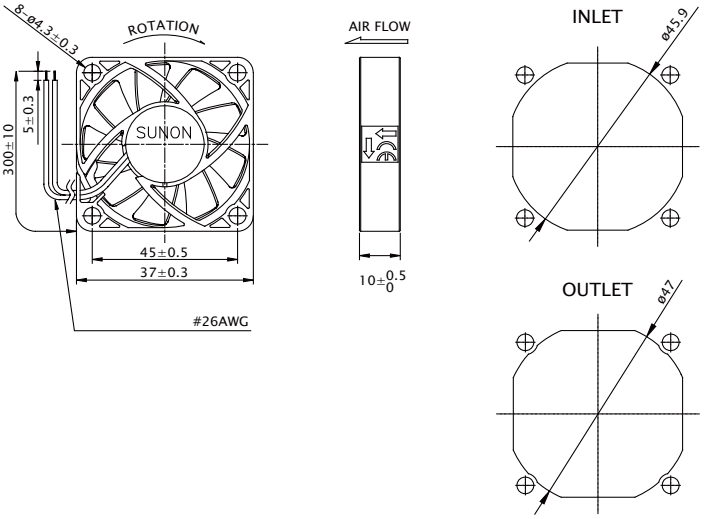

※ All model can be customized. Please contact Sunon Sales.

※ Specifications are subject to change without notice. Please Visit SUNON website at www.sunon.com for update information.

50x50x10 mm

8.4~13.8 CFM

Specification

MAGLev by SUNON	Bearing	Rated Voltage	Power Current	Power Consumption	Speed	Airflow	Static Pressure	Noise	Weight	Curve
	● VAPO	(VDC)	(mA)	(WATTS)	(RPM)	(CFM)	(inch-H_2O)	(dB(A))	(g)	
MF50100V1-1000U-A99	●	5	155	0.78	5800	13.8	0.15	30.7	19.5	1
MF50100V2-1000U-A99	●	5	85	0.43	4800	11.0	0.11	25.6	19.5	3
MF50100V3-1000U-A99	●	5	75	0.38	4300	8.4	0.08	22.4	19.5	4
MF50101V1-1000U-A99	●	12	70	0.84	5800	13.8	0.15	30.7	19.5	1
MF50101V2-1000U-A99	●	12	50	0.60	4800	11.0	0.11	25.6	19.5	3
MF50101V3-1000U-A99	●	12	37	0.45	4300	8.4	0.08	22.4	19.5	4
Model	2BALL ○ Sleeve	(VDC)	(mA)	(WATTS)	(RPM)	(CFM)	(inch-H_2O)	(dB(A))	(g)	
EE50101S1-1000U-999	○	12	90	1.08	5700	13.0	0.14	30.7	19.5	2
EE50101S2-1000U-999	○	12	75	0.90	4700	11.0	0.11	25.6	19.5	3

Function

(MF Series) R Type : F99 ／ F Type : G99
(EE, EB Series) F Type : C99

Air Flow-Static Pressure Characteristics

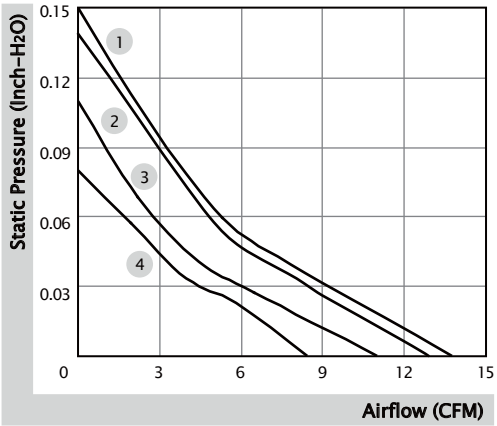

External Dimensions(mm)

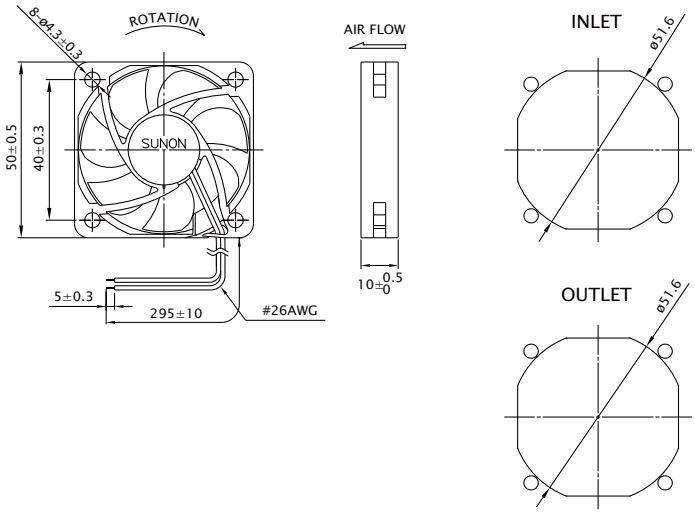

※ All model can be customized. Please contact Sunon Sales.
※ Specifications are subject to change without notice. Please Visit SUNON website at www.sunon.com for update information.

50x50x15 mm

10.2~18.6 CFM

Specification

MAGLev by SUNON	Bearing	Rated Voltage	Power Current	Power Consumption	Speed	Airflow	Static Pressure	Noise	Weight	Curve
	● VAPO	(VDC)	(mA)	(WATTS)	(RPM)	(CFM)	(inch-H_2O)	(dB(A))	(g)	
MF50151VX-1000U-A99	●	12	100	1.20	7200	18.6	0.31	38.1	33.0	1
MF50151V1-1000U-A99	●	12	66	0.80	6100	17.0	0.23	33.0	33.0	2
MF50151V2-1000U-A99	●	12	42	0.51	5000	13.0	0.17	29.0	33.0	3
MF50151V3-1000U-A99	●	12	28	0.34	3800	10.2	0.12	20.1	33.0	4
MF50152VX-1000U-A99	●	24	55	1.32	7200	18.6	0.31	38.1	33.0	1
MF50152V1-1000U-A99	●	24	42	1.01	6100	17.0	0.23	33.0	33.0	2
MF50152V2-1000U-A99	●	24	27	0.65	5000	13.0	0.17	29.0	33.0	3

Function R Type : F99 ／ F Type : G99

Air Flow-Static Pressure Characteristics

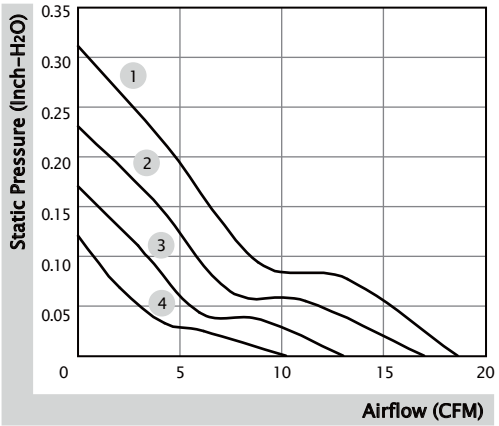

External Dimensions(mm)

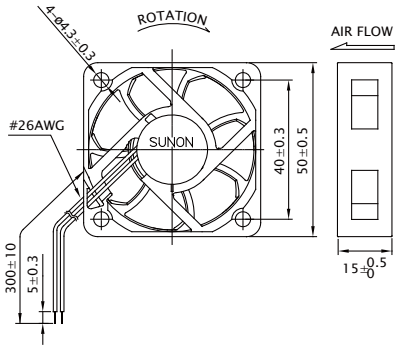

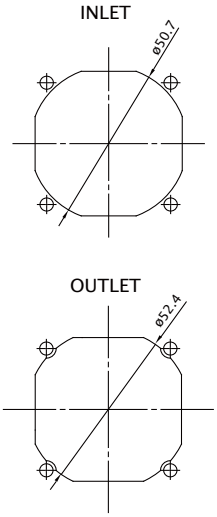

※ All model can be customized. Please contact Sunon Sales.

※ Specifications are subject to change without notice. Please Visit SUNON website at www.sunon.com for update information.

50x50x15 mm

7.7 CFM

Specification

MAGLev by SUNON	Bearing	Rated Voltage	Power Current	Power Consumption	Speed	Airflow	Static Pressure	Noise	Weight	Curve
	● VAPO	(VDC)	(mA)	(WATTS)	(RPM)	(CFM)	(inch-H_2O)	(dB(A))	(g)	
HA50151V4-1000U-A99	●	12	25	0.30	3200	7.7	0.07	15.4	33.0	1

Function F Type : G99

Air Flow-Static Pressure Characteristics

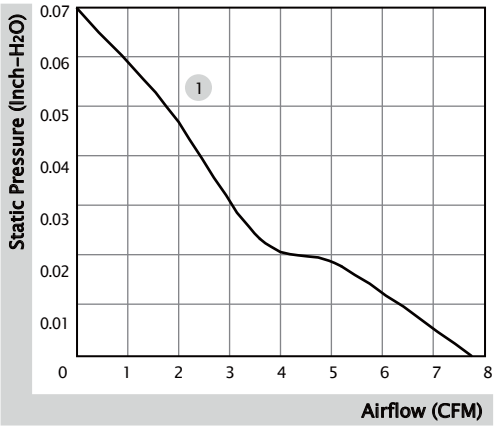

External Dimensions(mm)

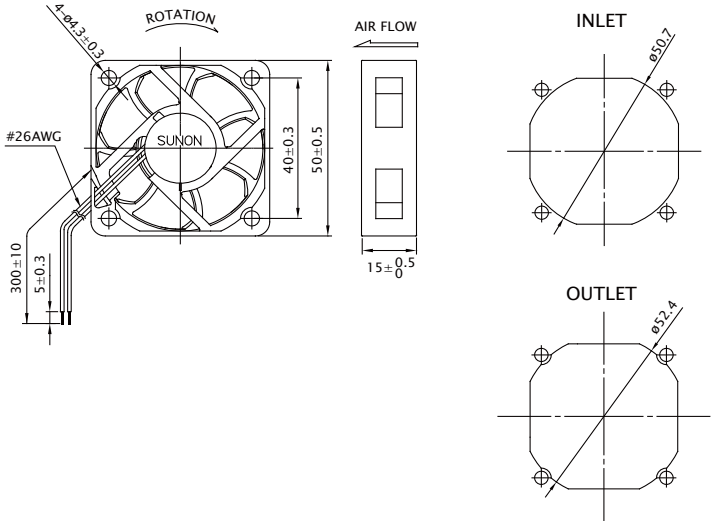

※ All model can be customized. Please contact Sunon Sales.

※ Specifications are subject to change without notice. Please Visit SUNON website at www.sunon.com for update information.

60x60x10 mm

12.2~16.3 CFM

Specification

MAGLev by SUNON	Bearing	Rated Voltage	Power Current	Power Consumption	Speed	Airflow	Static Pressure	Noise	Weight	Curve
	● VAPO	(VDC)	(mA)	(WATTS)	(RPM)	(CFM)	(inch-H_2O)	(dB(A))	(g)	
MF60101V1-1000U-A99	●	12	108	1.30	4000	16.3	0.12	28.5	23.0	1
MF60101V2-1000U-A99	●	12	75	0.90	3500	14.3	0.10	25.0	23.0	2
MF60101V3-1000U-A99	●	12	46	0.56	3000	12.2	0.08	20.5	23.0	3

Function R Type : F99 ／ F Type : G99

Air Flow-Static Pressure Characteristics

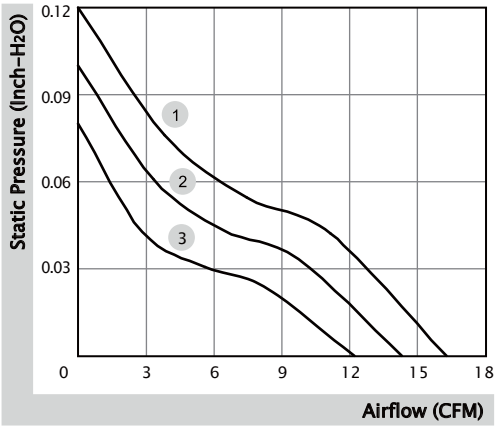

External Dimensions(mm)

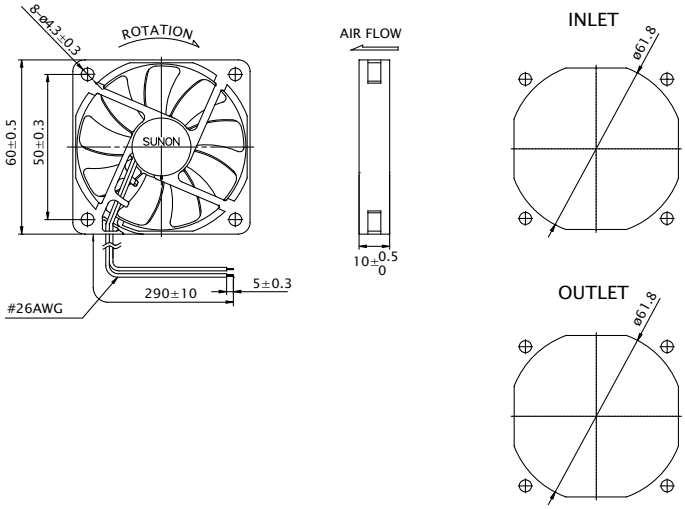

※ All model can be customized. Please contact Sunon Sales.

※ Specifications are subject to change without notice. Please Visit SUNON website at www.sunon.com for update information.

60x60x15 mm

17.6~30.4 CFM

Specification

MAGLev by SUNON	Bearing	Rated Voltage	Power Current	Power Consumption	Speed	Airflow	Static Pressure	Noise	Weight	Curve
	● VAPO	(VDC)	(mA)	(WATTS)	(RPM)	(CFM)	(inch-H_2O)	(dB(A))	(g)	
MF60151VX-1000U-A99	●	12	185	2.22	5400	30.4	0.22	36.2	35.5	1
MF60151V1-1000U-A99	●	12	127	1.53	4700	26.4	0.18	34.2	35.5	2
MF60151V2-1000U-A99	●	12	68	0.82	3900	22.8	0.14	29.2	35.5	3
MF60151V3-1000U-A99	●	12	48	0.58	3000	17.6	0.12	21.3	35.5	4
MF60152VX-1000U-A99	●	24	85	2.04	5400	30.4	0.22	36.2	35.5	1
MF60152V1-1000U-A99	●	24	75	1.80	4700	26.4	0.18	34.2	35.5	2
MF60152V2-1000U-A99	●	24	40	0.96	3900	22.8	0.14	29.2	35.5	3

Function R Type : F99 ／ F Type : G99

Air Flow-Static Pressure Characteristics

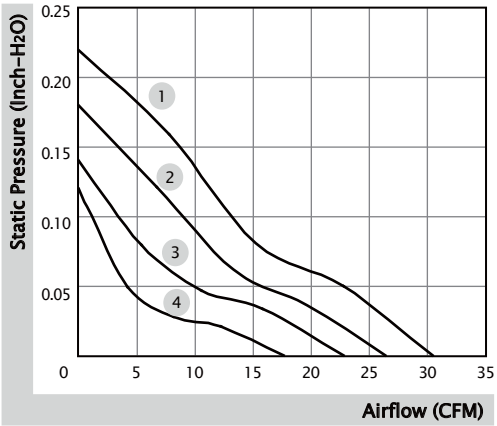

External Dimensions(mm)

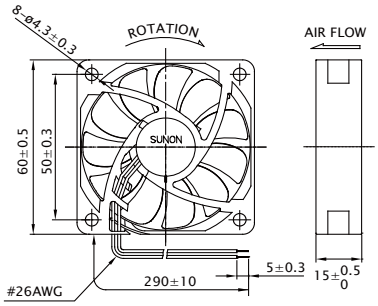

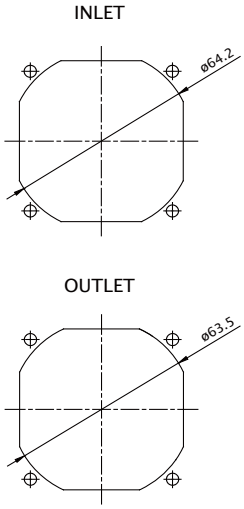

※ All model can be customized. Please contact Sunon Sales.

※ Specifications are subject to change without notice. Please Visit SUNON website at www.sunon.com for update information.

60x60x15 mm

12.7 CFM

Specification

MAGLev by SUNON	Bearing	Rated Voltage	Power Current	Power Consumption	Speed	Airflow	Static Pressure	Noise	Weight	Curve
	● VAPO	(VDC)	(mA)	(WATTS)	(RPM)	(CFM)	(inch-H_2O)	(dB(A))	(g)	
HA60151V4-1000U-A99	●	12	22	0.27	2200	12.7	0.04	14.5	35.0	1

Function F Type : G99

Air Flow-Static Pressure Characteristics

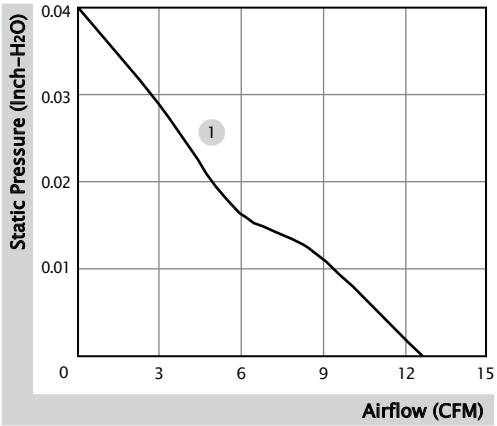

External Dimensions(mm)

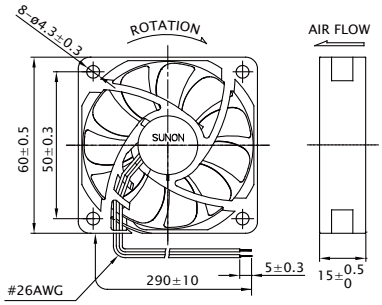

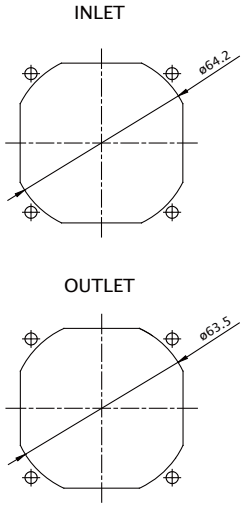

※ All model can be customized. Please contact Sunon Sales.

※ Specifications are subject to change without notice. Please Visit SUNON website at www.sunon.com for update information.

60x60x15 mm (IP56/IP68)

10.6~21.3 CFM

Specification

Model	Bearing	Rated Voltage	Power Current	Power Consumption	Speed	Airflow	Static Pressure	Noise	Weight	Curve
	◉ 2BALL ○ Sleeve	(VDC)	(mA)	(WATTS)	(RPM)	(CFM)	(inch-H_2O)	(dB(A))	(g)	
GF60151B6-1E00U-AC9	◉	12	125	1.50	4500	21.3	0.18	34.5	47.0	1
GF60151B7-1E00U-AC9	◉	12	80	0.96	3900	18.2	0.13	29.8	47.0	2
GF60151B8-1E00U-AC9	◉	12	70	0.84	3200	14.5	0.09	24.9	47.0	3
GF60151B9-1E00U-AC9	◉	12	32	0.39	2300	10.6	0.05	17.1	47.0	4
GF60151B6-1E00U-AE9	◉	12	125	1.50	4500	21.3	0.18	34.5	47.0	1
GF60151B7-1E00U-AE9	◉	12	80	0.96	3900	18.2	0.13	29.8	47.0	2
GF60151B8-1E00U-AE9	◉	12	70	0.84	3200	14.5	0.09	24.9	47.0	3
GF60151B9-1E00U-AE9	◉	12	32	0.39	2300	10.6	0.05	17.1	47.0	4

Function

(IP56) R Type : FC9 ／ F Type : GC9
(IP68) R Type : FE9 ／ F Type : GE9

Air Flow-Static Pressure Characteristics

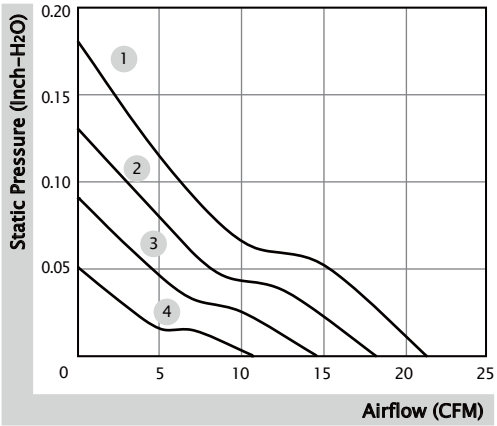

External Dimensions(mm)

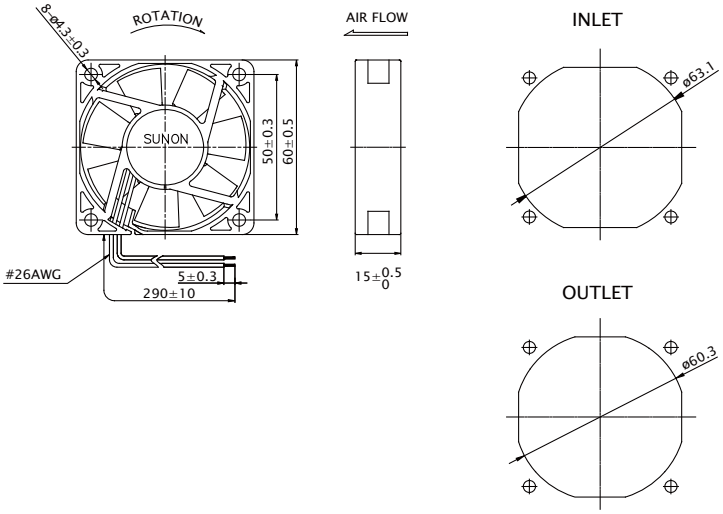

※ All model can be customized. Please contact Sunon Sales.
※ Specifications are subject to change without notice. Please Visit SUNON website at www.sunon.com for update information.

60x60x20 mm

16.0~30.5 CFM

Specification

Model	Bearing	Rated Voltage	Power Current	Power Consumption	Speed	Airflow	Static Pressure	Noise	Weight	Curve
	◉ 2BALL ○ Sleeve	(VDC)	(mA)	(WATTS)	(RPM)	(CFM)	(inch-H_2O)	(dB(A))	(g)	
PE60201BX-000U-A99	◉	12	230	2.76	5500	30.5	0.35	41.0	52.0	1
PE60201B1-000U-A99	◉	12	192	2.30	5000	27.5	0.28	39.0	52.0	2
PE60201B2-000U-A99	◉	12	148	1.78	4400	23.5	0.20	35.0	52.0	3
PE60201B3-000U-A99	◉	12	103	1.24	3600	19.5	0.15	30.0	52.0	4
PE60201B4-000U-A99	◉	12	81	0.97	3000	16.0	0.10	24.0	52.0	5

Function R Type : F99 ／ F Type : G99

Air Flow-Static Pressure Characteristics

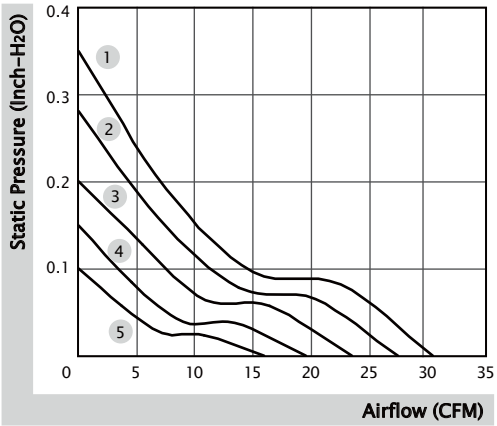

External Dimensions(mm)

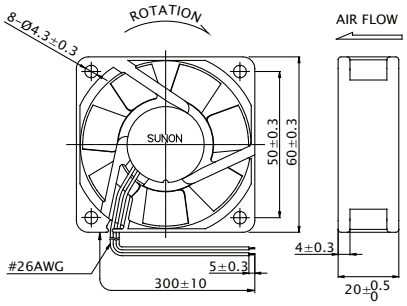

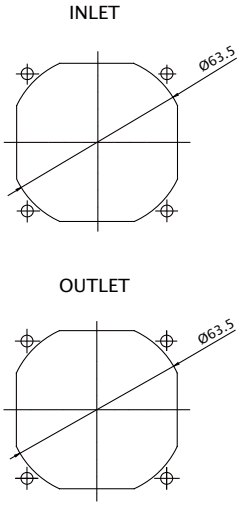

※ All model can be customized. Please contact Sunon Sales.

※ Specifications are subject to change without notice. Please Visit SUNON website at www.sunon.com for update information.

60x60x20 mm

16.5~25.5 CFM

Specification

MAGLev by SUNON	Bearing	Rated Voltage	Power Current	Power Consumption	Speed	Airflow	Static Pressure	Noise	Weight	Curve
	● VAPO	(VDC)	(mA)	(WATTS)	(RPM)	(CFM)	(inch-H_2O)	(dB(A))	(g)	
MF60201VX-1000U-A99	●	12	142	1.71	5700	25.5	0.27	39.0	50.0	1
MF60201V1-1000U-A99	●	12	100	1.20	5000	23.0	0.21	33.5	50.0	2
MF60201V2-1000U-A99	●	12	65	0.78	4200	19.0	0.16	28.0	50.0	3
MF60201V3-1000U-A99	●	12	40	0.48	3100	16.5	0.10	21.0	50.0	4
MF60202VX-1000U-A99	●	24	75	1.80	5700	25.5	0.27	39.0	50.0	1
MF60202V1-1000U-A99	●	24	55	1.32	5000	23.0	0.21	33.5	50.0	2
MF60202V2-1000U-A99	●	24	35	0.84	4200	19.0	0.16	28.0	50.0	3
MF60202V3-1000U-A99	●	24	22	0.53	3100	16.5	0.10	21.0	50.0	4

Function R Type : F99 ／ F Type : G99

Air Flow-Static Pressure Characteristics

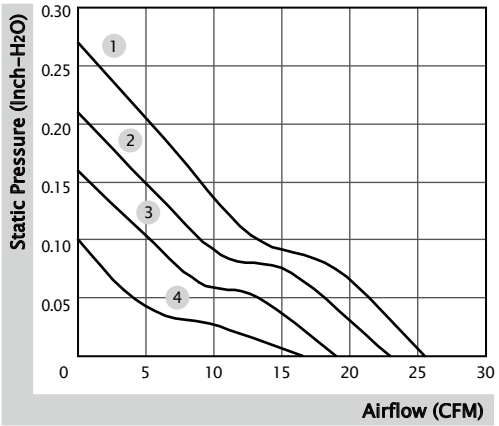

External Dimensions(mm)

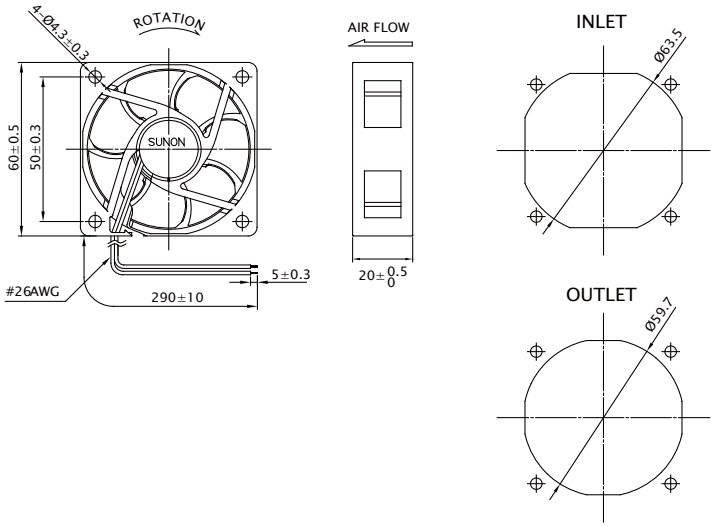

※ All model can be customized. Please contact Sunon Sales.

※ Specifications are subject to change without notice. Please Visit SUNON website at www.sunon.com for update information.

60x60x20 mm

14.1~23.0 CFM

Specification

Model	Bearing	Rated Voltage	Power Current	Power Consumption	Speed	Airflow	Static Pressure	Noise	Weight	Curve
	◉ 2BALL ○ Sleeve	(VDC)	(mA)	(WATTS)	(RPM)	(CFM)	(inch-H_2O)	(dB(A))	(g)	
EE60201B1-000U-999	◉	12	135	1.62	4500	23.0	0.18	34.5	52.0	1
EE60201B2-000U-999	◉	12	95	1.14	3700	19.0	0.14	29.0	52.0	2
EE60201B3-000U-999	◉	12	70	0.84	3000	14.1	0.09	24.5	52.0	3
EF60202B1-000U-A99	◉	24	60	1.44	4500	23.0	0.18	34.5	52.0	1
EF60202B2-000U-A99	◉	24	38	0.92	3700	19.0	0.14	29.0	52.0	2
EF60202B3-000U-A99	◉	24	23	0.56	3000	14.1	0.09	24.5	52.0	3

Function

(12V) Auto Restart : A99 ／ F Type : C99, G99
(24V) R Type : F99 ／ F Type : G99

Air Flow-Static Pressure Characteristics

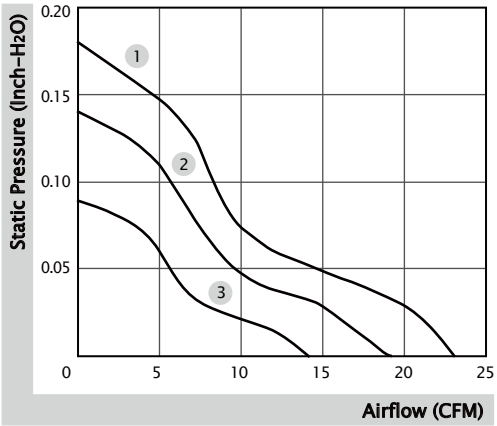

External Dimensions(mm)

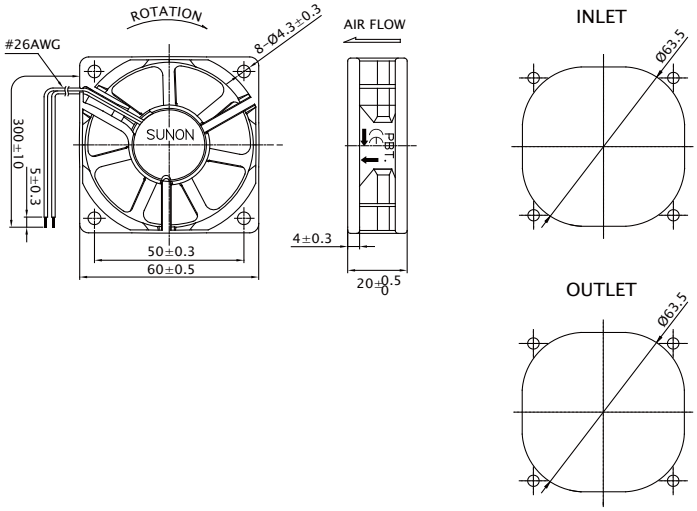

※ All model can be customized. Please contact Sunon Sales.
※ Specifications are subject to change without notice. Please Visit SUNON website at www.sunon.com for update information.

60x60x20 mm

16.8~22.6 CFM

Specification

Model	Bearing	Rated Voltage	Power Current	Power Consumption	Speed	Airflow	Static Pressure	Noise	Weight	Curve
	◐ 2BALL ○ Sleeve	(VDC)	(mA)	(WATTS)	(RPM)	(CFM)	(inch-H_2O)	(dB(A))	(g)	
EE60201S1-1000U-999	○	12	115	1.38	4700	22.6	0.18	32.5	50.0	1
EE60201S2-1000U-999	○	12	82	0.99	3900	18.5	0.14	26.3	50.0	2
EE60201S3-1000U-999	○	12	58	0.70	3200	16.8	0.10	22.0	50.0	3

Function F Type : C99

Air Flow-Static Pressure Characteristics

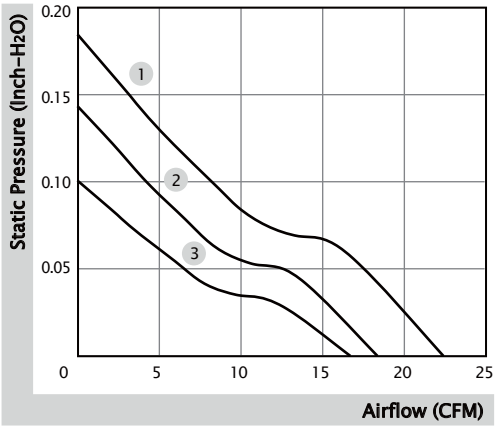

External Dimensions(mm)

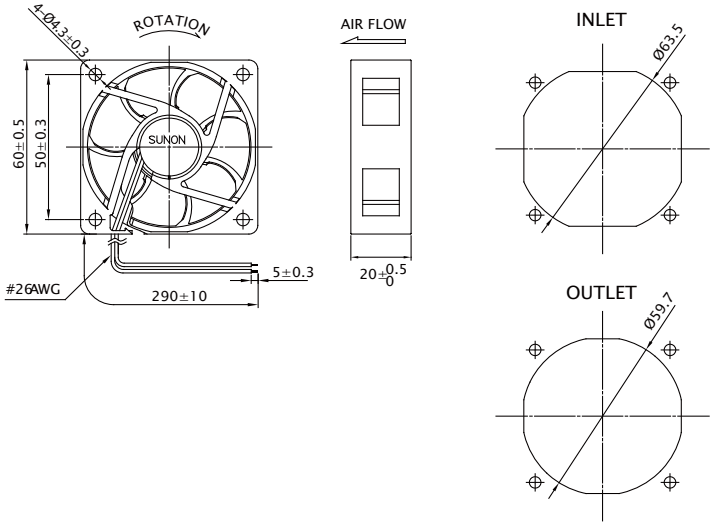

※ All model can be customized. Please contact Sunon Sales.

※ Specifications are subject to change without notice. Please Visit SUNON website at www.sunon.com for update information.

60x60x25 mm

13.9~23.5 CFM

Specification

Model	Bearing	Rated Voltage	Power Current	Power Consumption	Speed	Airflow	Static Pressure	Noise	Weight	Curve
	◉ 2BALL ○ Sleeve	(VDC)	(mA)	(WATTS)	(RPM)	(CFM)	(inch-H_2O)	(dB(A))	(g)	
EF60251B1-1000U-A99	◉	12	82	0.99	5200	23.5	0.22	31.5	54.4	1
EF60251B2-1000U-A99	◉	12	58	0.70	4500	19.3	0.17	27.0	54.6	2
EF60251B3-1000U-A99	◉	12	38	0.46	3400	13.9	0.10	20.0	54.0	3
EF60252B1-1000U-A99	◉	24	45	1.08	5200	23.5	0.22	31.5	54.4	1

Function

R Type : F99 ／ F Type : G99 ／ PWM : H99, Q99, S99

Air Flow-Static Pressure Characteristics

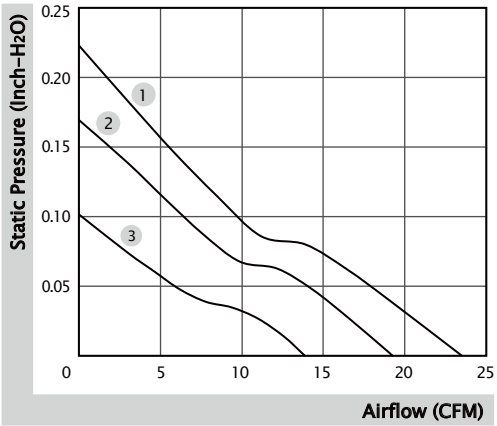

External Dimensions(mm)

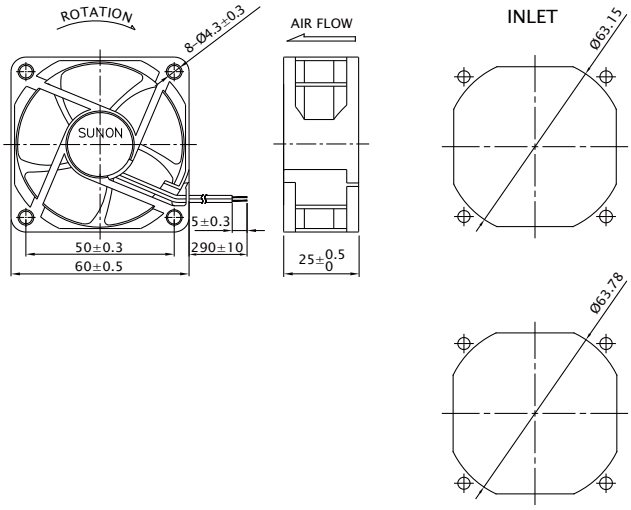

※ All model can be customized. Please contact Sunon Sales.

※ Specifications are subject to change without notice. Please Visit SUNON website at www.sunon.com for update information.

60x60x25 mm

16.0~27.0 CFM

Specification

MAGLev by SUNON	Bearing	Rated Voltage	Power Current	Power Consumption	Speed	Airflow	Static Pressure	Noise	Weight	Curve
	● VAPO	(VDC)	(mA)	(WATTS)	(RPM)	(CFM)	(inch-H_2O)	(dB(A))	(g)	
MF60251VX-1000U-A99	●	12	130	1.56	5200	27.0	0.31	31.2	45.0	1
MF60251V1-1000U-A99	●	12	75	0.90	4500	23.5	0.21	27.0	45.0	2
MF60251V2-1000U-A99	●	12	72	0.87	3800	19.3	0.15	22.0	45.0	3
MF60251V3-1000U-A99	●	12	44	0.53	3100	16.0	0.10	16.7	45.0	4
MF60252VX-1000U-A99	●	24	80	1.92	5200	27.0	0.31	31.2	45.0	1
MF60252V1-1000U-A99	●	24	50	1.20	4500	23.5	0.21	27.0	45.0	2
MF60252V2-1000U-A99	●	24	30	0.72	3800	19.3	0.15	22.0	45.0	3
MF60252V3-1000U-A99	●	24	22	0.53	3100	16.0	0.10	16.7	45.0	4
Model	2BALL ○ Sleeve	(VDC)	(mA)	(WATTS)	(RPM)	(CFM)	(inch-H_2O)	(dB(A))	(g)	
EE60251S1-1000U-999	○	12	122	1.47	4500	23.5	0.21	27.0	45.0	2
EE60251S2-1000U-999	○	12	85	1.02	3800	19.3	0.15	22.0	45.0	3
EE60251S3-1000U-999	○	12	60	0.72	3100	16.0	0.10	16.7	45.0	4
EF60252S1-1000U-A99	○	24	50	1.20	4500	23.5	0.21	27.0	45.0	2

Function

(MF Series) R Type : F99 ／ F Type : G99
(EE Series) F Type : C99
(EF Series) F Type : G99

Air Flow-Static Pressure Characteristics

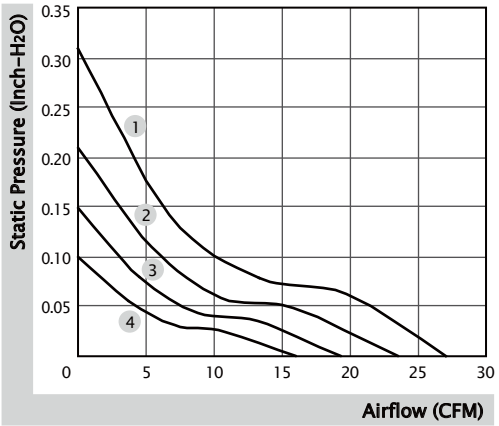

External Dimensions(mm)

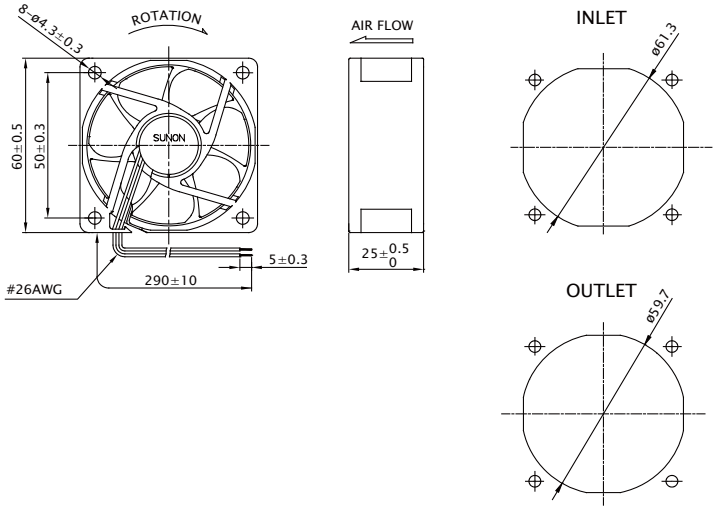

※ All model can be customized. Please contact Sunon Sales.
※ Specifications are subject to change without notice. Please Visit SUNON website at www.sunon.com for update information.

60x60x25 mm (GR487/IP68)

26.9~54.8 CFM

Specification

Model	Bearing	Rated Voltage	Power Current	Power Consumption	Speed	Airflow	Static Pressure	Noise	Weight	Curve
	◉ 2BALL ○ Sleeve	(VDC)	(mA)	(WATTS)	(RPM)	(CFM)	(inch-H_2O)	(dB(A))	(g)	
GF60252BX-1000U-ADP	◉	24	545	13.08	12900	54.8	1.44	55.4	84.0	1
GF60252B1-1000U-ADP	◉	24	405	9.72	11500	48.4	1.21	53.2	84.0	2
GF60252B2-1000U-ADP	◉	24	208	5.00	9000	36.5	0.79	47.2	84.0	3
GF60252B3-1000U-ADP	◉	24	115	2.76	6450	26.9	0.42	38.0	84.0	4
GF60252BX-1000U-AEP	◉	24	545	13.08	12900	54.8	1.44	55.4	84.0	1
GF60252B1-1000U-AEP	◉	24	405	9.72	11500	48.4	1.21	53.2	84.0	2
GF60252B2-1000U-AEP	◉	24	208	5.00	9000	36.5	0.79	47.2	84.0	3
GF60252B3-1000U-AEP	◉	24	115	2.76	6450	26.9	0.42	38.0	84.0	4

Function

(GR487) R Type : FDP ／ F Type : GDP ／ PWM : HDP, QDP, SDP
(IP68) R Type : FEP ／ F Type : GEP ／ PWM : HEP, QEP, SEP

Air Flow-Static Pressure Characteristics

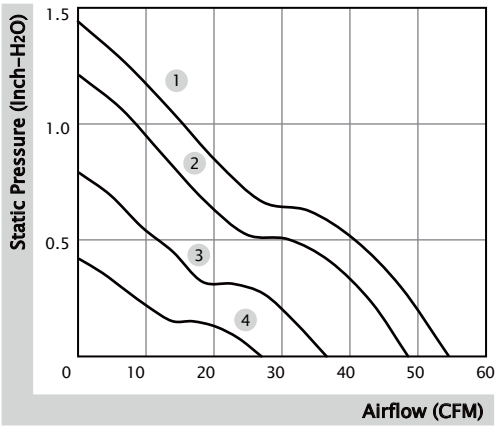

External Dimensions(mm)

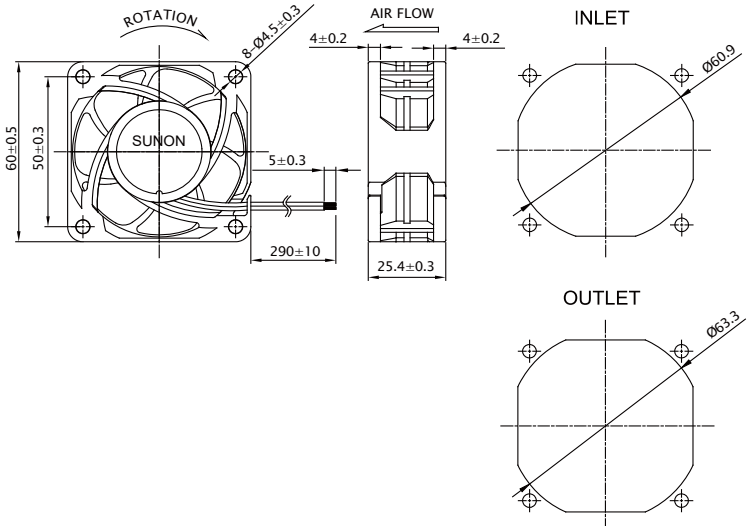

※ All model can be customized. Please contact Sunon Sales.
※ Specifications are subject to change without notice. Please Visit SUNON website at www.sunon.com for update information.

60x60x25 mm

29.0~40.0 CFM

Specification

Model	Bearing	Rated Voltage	Power Current	Power Consumption	Speed	Airflow	Static Pressure	Noise	Weight	Curve
	◐ 2BALL ○ Sleeve	(VDC)	(mA)	(WATTS)	(RPM)	(CFM)	(inch-H_2O)	(dB(A))	(g)	
PF60251BX-1000U-A99	◐	12	270	3.24	8300	40.0	0.66	46.0	65.0	1
PF60251B1-1000U-A99	◐	12	195	2.34	7500	36.0	0.56	41.7	65.0	2
PF60251B2-1000U-A99	◐	12	165	1.98	7000	31.5	0.50	40.7	65.0	3
PF60251B3-1000U-A99	◐	12	118	1.42	6200	29.0	0.41	37.5	65.0	4
PF60252BX-1000U-A99	◐	24	134	3.22	8300	40.0	0.66	46.0	65.0	1
PF60252B1-1000U-A99	◐	24	107	2.57	7500	36.0	0.56	41.7	65.0	2
PF60252B2-1000U-A99	◐	24	89	2.14	7000	31.5	0.50	40.7	65.0	3
PF60252B3-1000U-A99	◐	24	65	1.56	6200	29.0	0.41	37.5	65.0	4
Model	● VAPO	(VDC)	(mA)	(WATTS)	(RPM)	(CFM)	(inch-H_2O)	(dB(A))	(g)	
PF60252VX-1000U-A99	●	24	160	3.84	8300	40.0	0.66	46.0	64.0	1
PF60252V1-1000U-A99	●	24	126	3.03	7500	36.0	0.56	41.7	64.0	2
PF60252V2-1000U-A99	●	24	105	2.52	7000	31.5	0.50	40.7	64.0	3
PF60252V3-1000U-A99	●	24	81	1.95	6200	29.0	0.41	37.5	64.0	4

Function

R Type : F99 ／ F Type : G99 ／ PWM : H99, Q99, S99

Air Flow-Static Pressure Characteristics

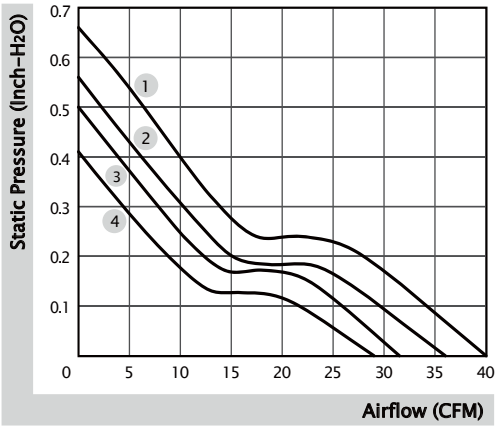

External Dimensions(mm)

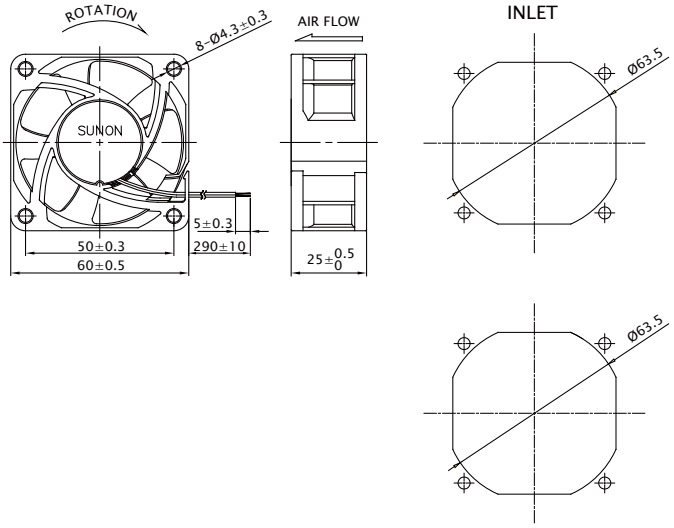

※ All model can be customized. Please contact Sunon Sales.

※ Specifications are subject to change without notice. Please Visit SUNON website at www.sunon.com for update information.

60x60x25 mm

13.8 CFM

Specification

MAGLev by SUNON	Bearing	Rated Voltage	Power Current	Power Consumption	Speed	Airflow	Static Pressure	Noise	Weight	Curve
	● VAPO	(VDC)	(mA)	(WATTS)	(RPM)	(CFM)	(inch-H_2O)	(dB(A))	(g)	
HA60251V4-1000U-A99	●	12	20	0.24	2500	13.8	0.06	10.7	45.0	1

Function F Type : G99

Air Flow-Static Pressure Characteristics

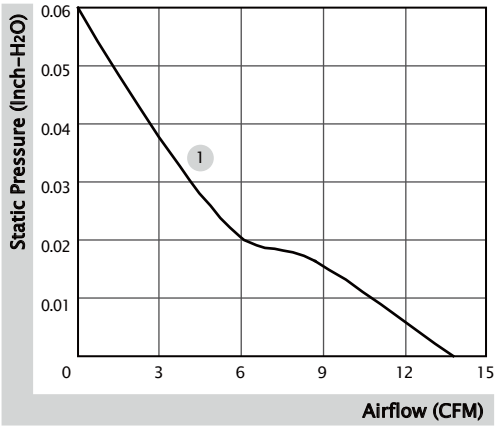

External Dimensions(mm)

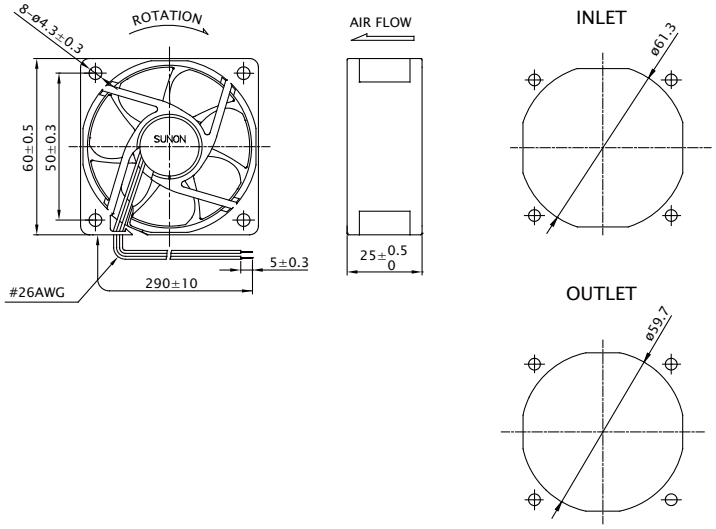

※ All model can be customized. Please contact Sunon Sales.

※ Specifications are subject to change without notice. Please Visit SUNON website at www.sunon.com for update information.

60x60x38 mm

41.4~75.2 CFM

Specification

Model	Bearing	Rated Voltage	Power Current	Power Consumption	Speed	Airflow	Static Pressure	Noise	Weight	Curve
	◉ 2BALL ○ Sleeve	(VDC)	(mA)	(WATTS)	(RPM)	(CFM)	(inch-H_2O)	(dB(A))	(g)	
PF60381BX-1000U-A9H	◉	12	2500	30.00	16500	75.2	3.57	67.0	127.0	1
PF60381B1-1000U-A9H	◉	12	1200	14.40	13200	60.6	2.30	61.2	127.0	2
PF60382BX-1000U-A9H	◉	24	1130	27.12	16500	75.2	3.57	67.0	65.0	1
PF60382B1-1000U-A9H	◉	24	550	13.20	13200	60.6	2.30	61.2	65.0	2
PF60382B2-1000U-A9H	◉	24	290	6.96	10300	56.5	1.28	56.0	65.0	3
PF60382B3-1000U-A9H	◉	24	135	3.24	7400	41.4	0.69	47.0	65.0	4

Function

R Type : F9H ／ F Type : G9H ／ PWM : H9H, Q9H, S9H

Air Flow-Static Pressure Characteristics

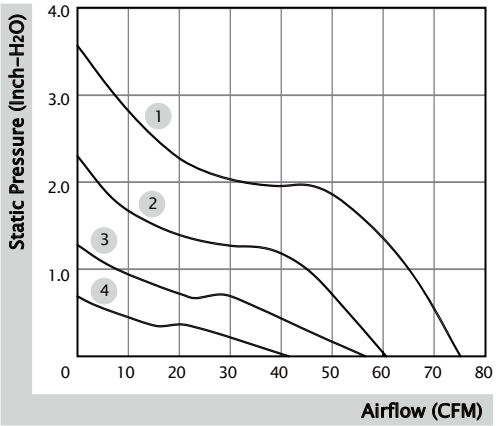

External Dimensions(mm)

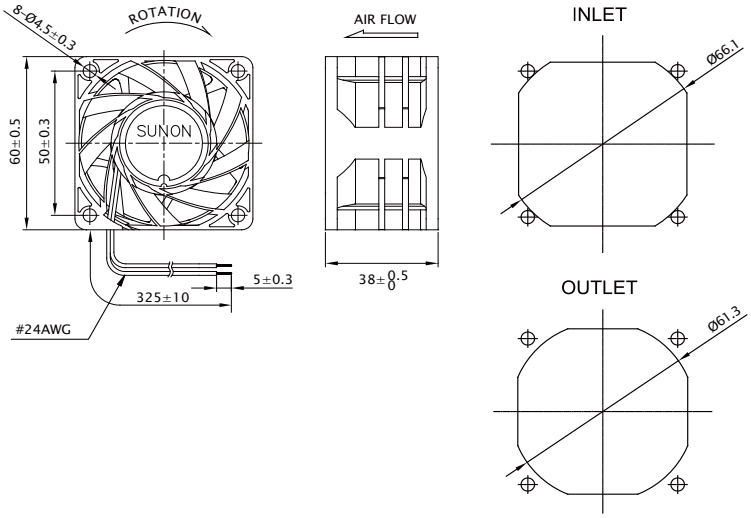

※ All model can be customized. Please contact Sunon Sales.

※ Specifications are subject to change without notice. Please Visit SUNON website at www.sunon.com for update information.

60x60x38 mm

54.1~67.8 CFM

Specification

Model	Bearing	Rated Voltage	Power Current	Power Consumption	Speed	Airflow	Static Pressure	Noise	Weight	Curve
	◐ 2BALL ○ Sleeve	(VDC)	(mA)	(WATTS)	(RPM)	(CFM)	(inch-H_2O)	(dB(A))	(g)	
VF60381BX-000U-A9H	◐	12	1900	22.80	22800	67.8	4.84	64.1	120.0	1
VF60381B1-000U-A9H	◐	12	1000	12.00	18300	54.1	4.23	60.9	120.0	2
VF60384BX-1000U-A9H	◐	48	460	22.08	22800	67.8	4.84	64.1	120.0	1
VF60384B1-1000U-A9H	◐	48	265	12.72	18300	54.1	4.23	60.9	120.0	2

Function

(12V) R Type : F9H ／ F Type : G9H ／ PWM : H9H, Q9H, S9H
(48V) R Type : F9H ／ F Type : G9H ／ PWM : Q9H, S9H

Air Flow-Static Pressure Characteristics

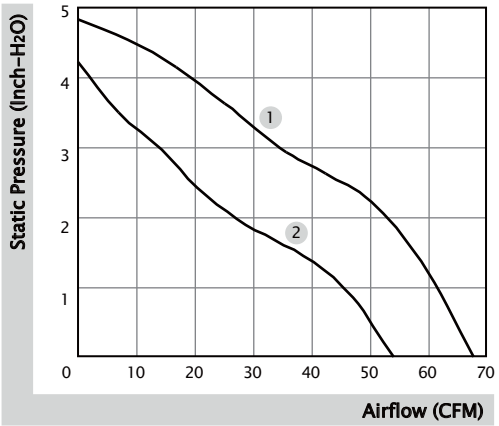

External Dimensions(mm)

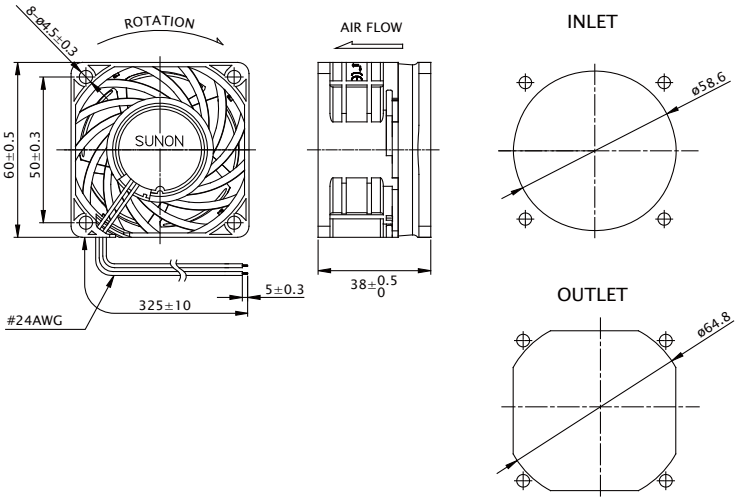

※ All model can be customized. Please contact Sunon Sales.
※ Specifications are subject to change without notice. Please Visit SUNON website at www.sunon.com for update information.

60x60x56 mm

58.5~72.9 CFM

Specification

Model	Bearing	Rated Voltage	Power Current	Power Consumption	Speed	Airflow	Static Pressure	Noise	Weight	Curve
	◐ 2BALL ○ Sleeve	(VDC)	(mA)	(WATTS)	(RPM)	(CFM)	(inch-H_2O)	(dB(A))	(g)	
PF60561BX-000U-A9H	◐	12	2500	30.0	15300/14300	72.9	3.44	71.7	172.0	1
PF60561B1-000U-A9H	◐	12	1400	16.8	12300/11500	58.5	2.35	67.0	172.0	2

Function

R Type : F9H ／ F Type : G9H ／ PWM : H9H, Q9H, S9H

Air Flow-Static Pressure Characteristics

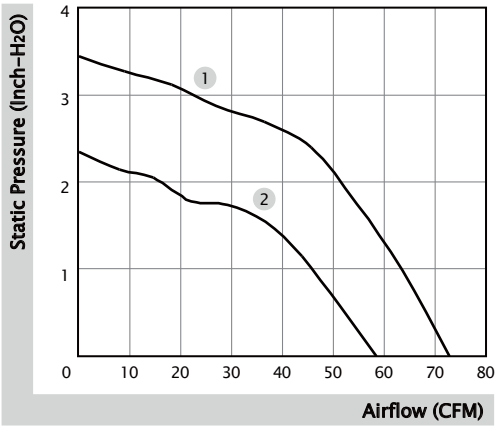

External Dimensions(mm)

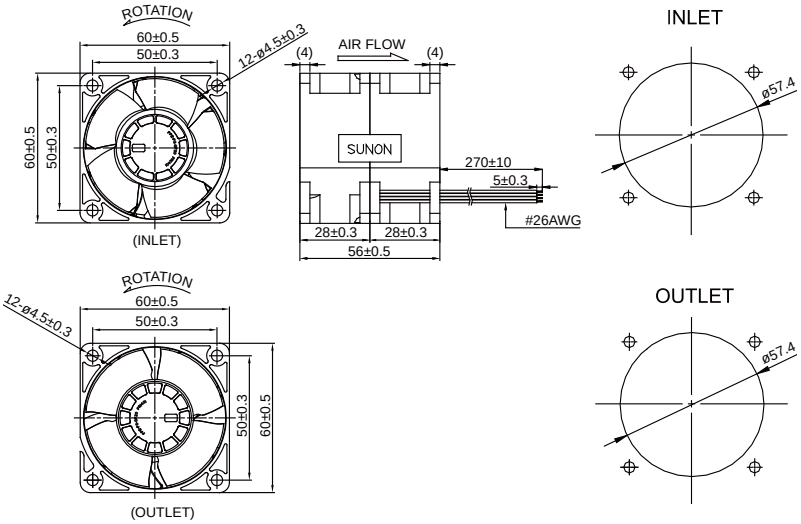

※ All model can be customized. Please contact Sunon Sales.

※ Specifications are subject to change without notice. Please Visit SUNON website at www.sunon.com for update information.

60x60x76 mm

58.7~73.2 CFM

Specification

Model	Bearing	Rated Voltage	Power Current	Power Consumption	Speed	Airflow	Static Pressure	Noise	Weight	Curve
	◐ 2BALL ○ Sleeve	(VDC)	(mA)	(WATTS)	(RPM)	(CFM)	(inch-H_2O)	(dB(A))	(g)	
PF60761BX-000U-A99	◐	12	2800	33.60	18200/14700	73.2	3.96	68.6	270.0	1
PF60761B1-000U-A99	◐	12	1600	19.20	14600/11700	58.7	2.54	62.8	270.0	2

Function

R Type : F99 ／ F Type : G99 ／ PWM : H99, Q99, S99

Air Flow-Static Pressure Characteristics

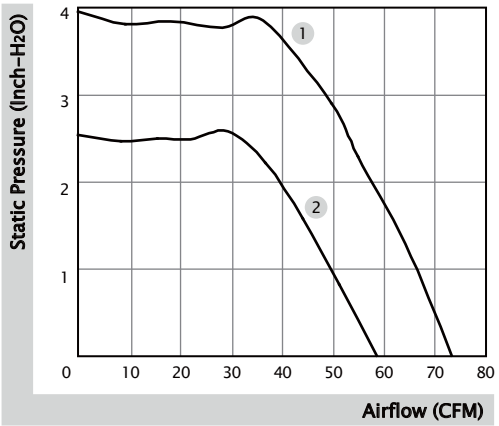

External Dimensions(mm)

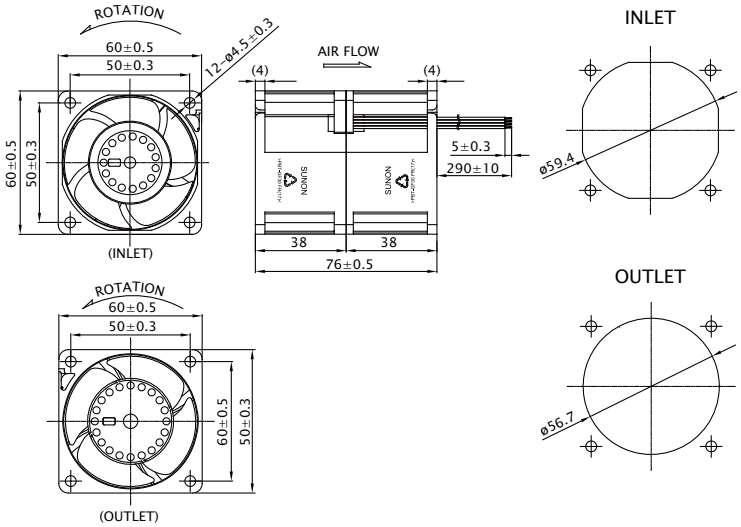

※ All model can be customized. Please contact Sunon Sales.

※ Specifications are subject to change without notice. Please Visit SUNON website at www.sunon.com for update information.

70x70x15 mm

19.1~27.3 CFM

Specification

MAGLev by SUNON	Bearing	Rated Voltage	Power Current	Power Consumption	Speed	Airflow	Static Pressure	Noise	Weight	Curve
	● VAPO	(VDC)	(mA)	(WATTS)	(RPM)	(CFM)	(inch-H_2O)	(dB(A))	(g)	
MF70151V1-1000U-A99	●	12	74	0.89	3,500	27.3	0.12	30.0	41.0	1
MF70151V2-1000U-A99	●	12	51	0.62	3,000	23.1	0.09	25.6	41.0	2
MF70151V3-1000U-A99	●	12	30	0.36	2,500	19.1	0.07	20.7	41.0	3

Function

R Type : F99 ／ F Type : G99 ／ PWM : H99, Q99, S99

Air Flow-Static Pressure Characteristics

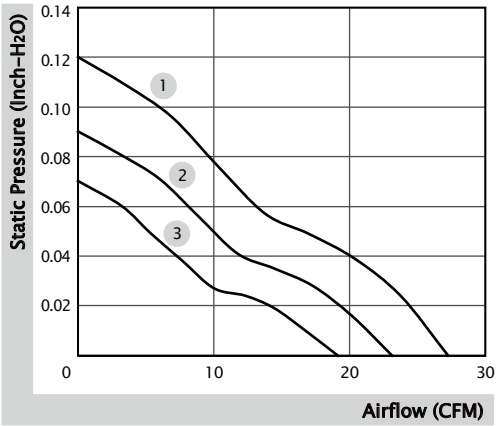

External Dimensions(mm)

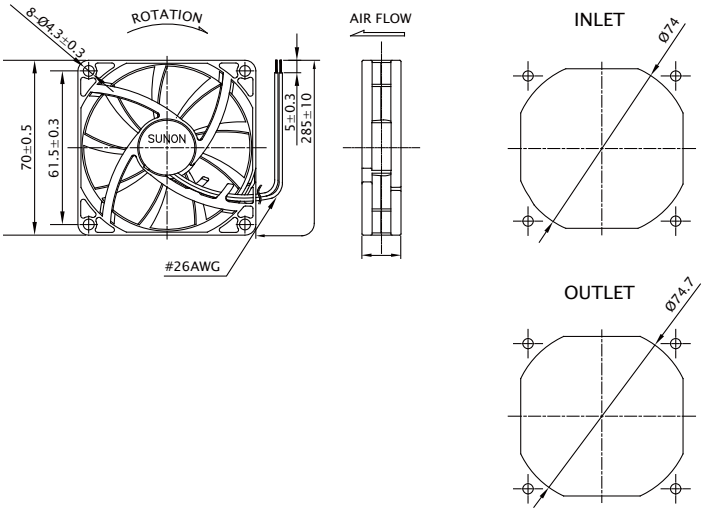

※ All model can be customized. Please contact Sunon Sales.

※ Specifications are subject to change without notice. Please Visit SUNON website at www.sunon.com for update information.

70x70x25 mm

40.0~49.0 CFM

Specification

MAGLev by SUNON	Bearing	Rated Voltage	Power Current	Power Consumption	Speed	Airflow	Static Pressure	Noise	Weight	Curve
	● VAPO	(VDC)	(mA)	(WATTS)	(RPM)	(CFM)	(inch-H_2O)	(dB(A))	(g)	
PMD2407PTV1-A GN	●	24	200	4.8	5100	49.0	0.36	44.0	90.0	1
PMD2407PTV2-A GN	●	24	160	3.8	4700	45.0	0.31	42.0	90.0	2
PMD2407PTV3-A GN	●	24	130	3.1	4200	40.0	0.25	38.0	90.0	3

Function R Type : (2).R.GN ／ F Type : (2).F.GN

Air Flow-Static Pressure Characteristics

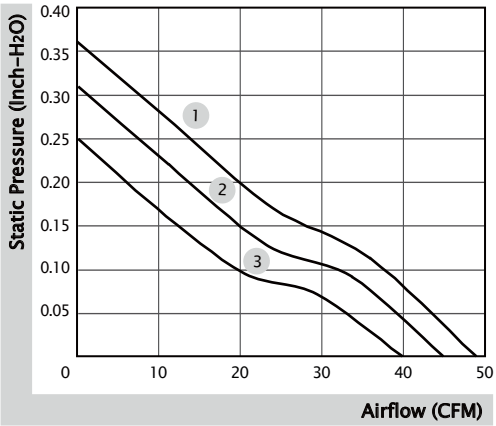

External Dimensions(mm)

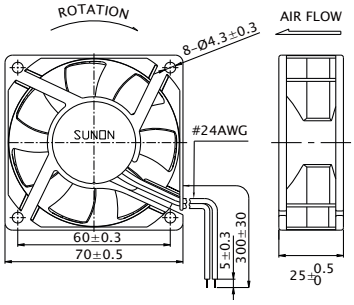

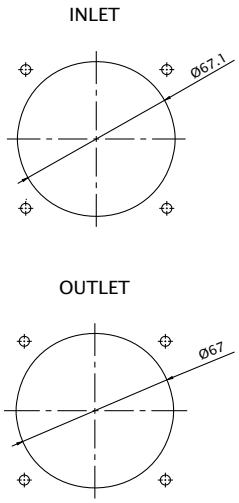

※ All model can be customized. Please contact Sunon Sales.

※ Specifications are subject to change without notice. Please Visit SUNON website at www.sunon.com for update information.

80x80x15 mm

30.0~37.0 CFM

Specification

Model	Bearing	Rated Voltage	Power Current	Power Consumption	Speed	Airflow	Static Pressure	Noise	Weight	Curve
	◉ 2BALL ○ Sleeve	(VDC)	(mA)	(WATTS)	(RPM)	(CFM)	(inch-H_2O)	(dB(A))	(g)	
EF80151S1-1000U-999	○	12	148	1.78	3500	37.0	0.17	32.9	67.0	1
EF80151S2-1000U-999	○	12	105	1.26	3100	33.6	0.13	29.9	67.0	2
EF80151S3-1000U-999	○	12	87	1.05	2800	30.0	0.11	26.5	67.0	3

Function F Type : C99

Air Flow-Static Pressure Characteristics

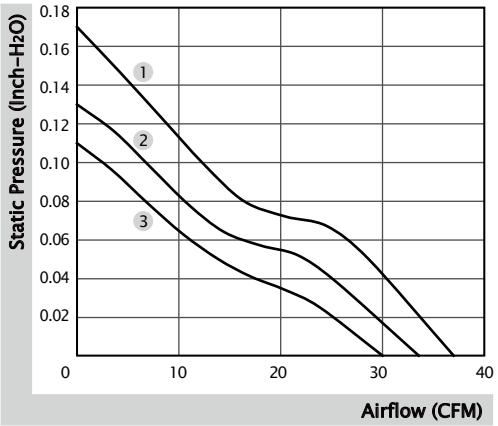

External Dimensions(mm)

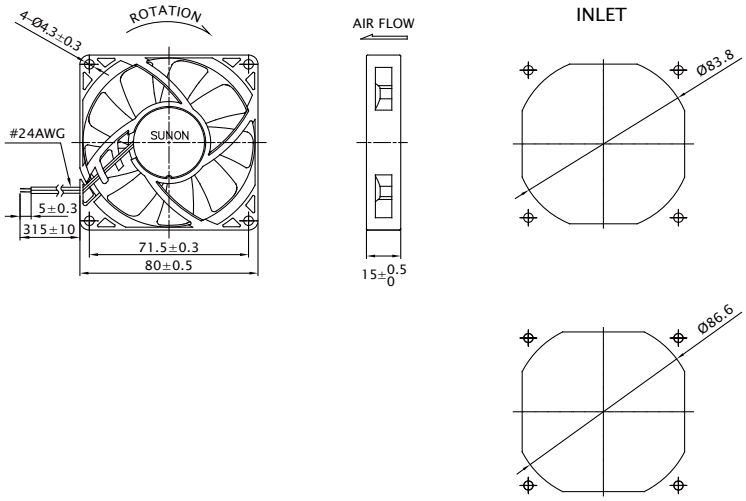

※ All model can be customized. Please contact Sunon Sales.

※ Specifications are subject to change without notice. Please Visit SUNON website at www.sunon.com for update information.

80x80x15 mm

30.0~37.0 CFM

Specification

MAGLev by SUNON	Bearing	Rated Voltage	Power Current	Power Consumption	Speed	Airflow	Static Pressure	Noise	Weight	Curve
	● VAPO	(VDC)	(mA)	(WATTS)	(RPM)	(CFM)	(inch-H_2O)	(dB(A))	(g)	
MF80151V1-1000U-A99	●	12	125	1.50	3500	37.0	0.17	32.9	67.0	1
MF80151V2-1000U-A99	●	12	94	1.13	3100	33.6	0.13	29.9	67.0	2
MF80151V3-1000U-A99	●	12	71	0.86	2800	30.0	0.11	26.5	67.0	3
MF80152V1-1000U-A99	●	24	68	1.64	3500	37.0	0.17	32.9	67.0	1
MF80152V2-1000U-A99	●	24	55	1.32	3100	33.6	0.13	29.9	67.0	2
MF80152V3-1000U-A99	●	24	40	0.96	2800	30.0	0.11	26.5	67.0	3

Function

R Type : F99 ／ F Type : G99 ／ PWM : H99, Q99, S99

Air Flow-Static Pressure Characteristics

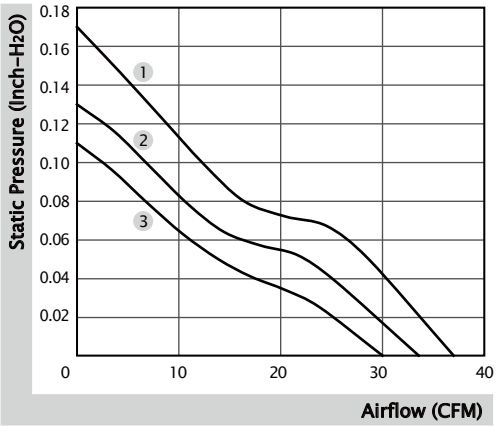

External Dimensions(mm)

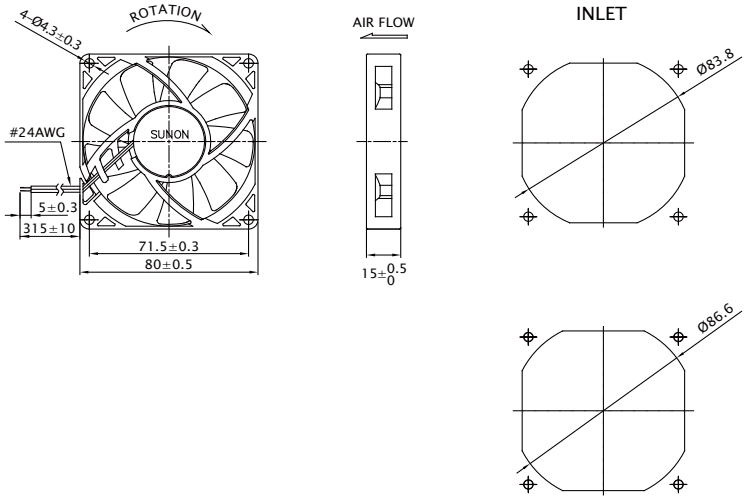

※ All model can be customized. Please contact Sunon Sales.

※ Specifications are subject to change without notice. Please Visit SUNON website at www.sunon.com for update information.

80x80x25 mm

53.0~60.0 CFM

Specification

MAGLev by SUNON	Bearing	Rated Voltage	Power Current	Power Consumption	Speed	Airflow	Static Pressure	Noise	Weight	Curve
	● VAPO	(VDC)	(mA)	(WATTS)	(RPM)	(CFM)	(inch-H_2O)	(dB(A))	(g)	
PF80251V1-1000U-A99	●	12	310	3.72	4800	60.0	0.41	44.7	91.0	1
PF80251V2-1000U-A99	●	12	240	2.88	4500	57.0	0.35	43.1	91.0	2
PF80251V3-1000U-A99	●	12	200	2.40	4200	53.0	0.30	41.5	91.0	3
PF80252V1-1000U-A99	●	24	180	4.32	4800	60.0	0.41	44.7	91.0	1
PF80252V2-1000U-A99	●	24	126	3.03	4500	57.0	0.35	43.1	91.0	2
PF80252V3-1000U-A99	●	24	110	2.64	4200	53.0	0.30	41.5	91.0	3

Function

R Type : F99 ／ F Type : G99 ／ PWM : H99, Q99, S99

Air Flow-Static Pressure Characteristics

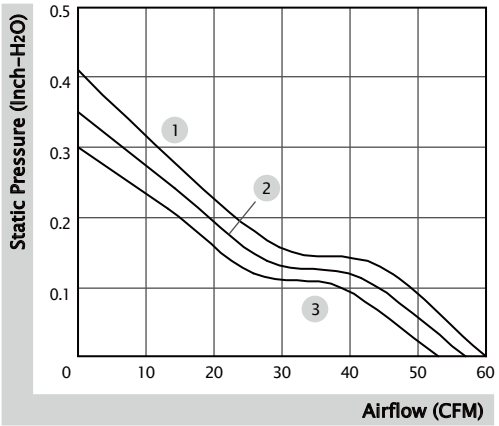

External Dimensions(mm)

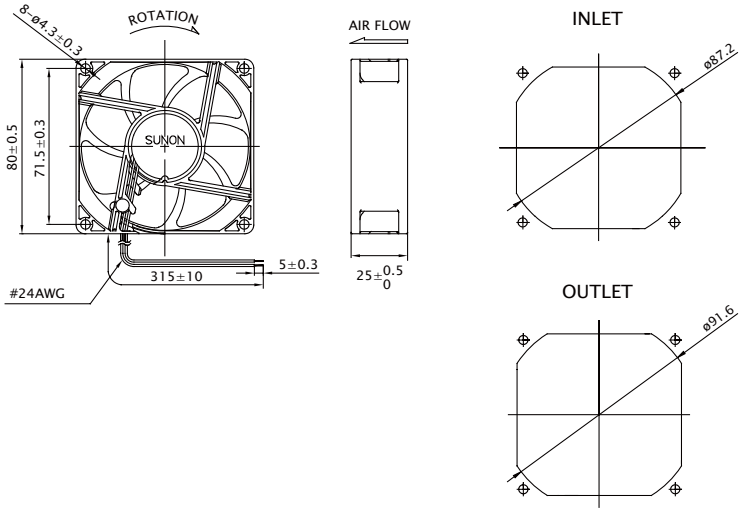

※ All model can be customized. Please contact Sunon Sales.

※ Specifications are subject to change without notice. Please Visit SUNON website at www.sunon.com for update information.

80x80x25 mm

53.0~60.0 CFM

Specification

Model	Bearing	Rated Voltage	Power Current	Power Consumption	Speed	Airflow	Static Pressure	Noise	Weight	Curve
	◐ 2BALL ○ Sleeve	(VDC)	(mA)	(WATTS)	(RPM)	(CFM)	(inch-H_2O)	(dB(A))	(g)	
PF80251B1-1000U-A99	◐	12	295	3.54	4800	60.0	0.41	45.5	91.0	1
PF80251B2-1000U-A99	◐	12	255	3.06	4500	57.0	0.35	44.0	91.0	2
PF80251B3-1000U-A99	◐	12	195	2.34	4200	53.0	0.30	42.5	91.0	3
PF80252B1-1000U-A99	◐	24	155	3.72	4800	60.0	0.41	45.5	91.0	1
PF80252B2-1000U-A99	◐	24	135	3.24	4500	57.0	0.35	44.0	91.0	2
PF80252B3-1000U-A99	◐	24	100	2.40	4200	53.0	0.30	42.5	91.0	3

Function

R Type : F99 ／ F Type : G99 ／ PWM : H99, Q99, S99

Air Flow-Static Pressure Characteristics

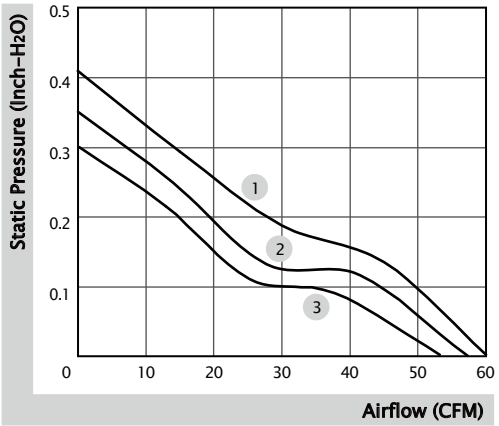

External Dimensions(mm)

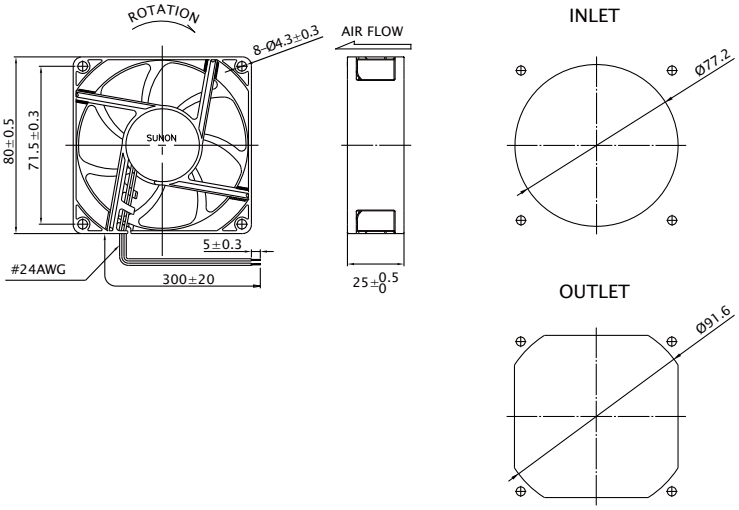

※ All model can be customized. Please contact Sunon Sales.

※ Specifications are subject to change without notice. Please Visit SUNON website at www.sunon.com for update information.

80x80x25 mm

33.0~41.0 CFM

Specification

MAGLev by SUNON	Bearing	Rated Voltage	Power Current	Power Consumption	Speed	Airflow	Static Pressure	Noise	Weight	Curve
	● VAPO	(VDC)	(mA)	(WATTS)	(RPM)	(CFM)	(inch-H_2O)	(dB(A))	(g)	
MF80251V1-1000U-A99	●	12	120	1.44	3200	41.0	0.18	33.0	75.0	1
MF80251V2-1000U-A99	●	12	92	1.11	2900	37.0	0.15	30.0	75.0	2
MF80251V3-1000U-A99	●	12	65	0.78	2600	33.0	0.11	28.0	75.0	3
MF80252V1-1000U-A99	●	24	65	1.56	3200	41.0	0.18	33.0	75.0	1
MF80252V2-1000U-A99	●	24	50	1.20	2900	37.0	0.15	30.0	75.0	2
MF80252V3-1000U-A99	●	24	40	0.96	2600	33.0	0.11	28.0	75.0	3
Model	2BALL ○ Sleeve	(VDC)	(mA)	(WATTS)	(RPM)	(CFM)	(inch-H_2O)	(dB(A))	(g)	
EF80251S1-1000U-A99	○	12	120	1.44	3200	41.0	0.18	33.0	75.0	1
EF80251S2-1000U-A99	○	12	95	1.14	2900	37.0	0.15	30.0	75.0	2
EF80251S3-1000U-A99	○	12	70	0.84	2600	33.0	0.11	28.0	75.0	3
EF80252S1-1000U-A99	○	24	55	1.32	3200	41.0	0.18	33.0	75.0	1
EF80252S2-1000U-A99	○	24	42	1.01	2900	37.0	0.15	30.0	75.0	2

Function

(MF Series) R Type : F99 ／ F Type : G99
(EF Series, Speed 1) R Type : F99 ／ F Type : G99
(EF Series, Speed 2,3) F Type : G99

Air Flow-Static Pressure Characteristics

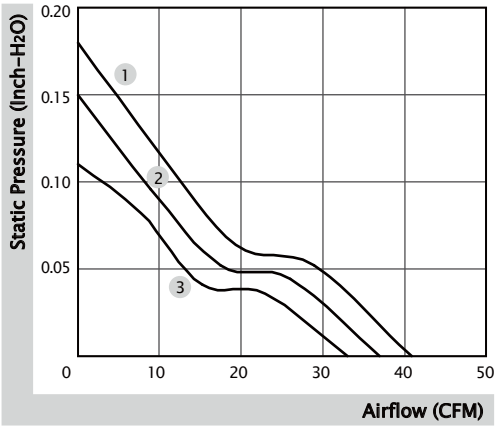

External Dimensions(mm)

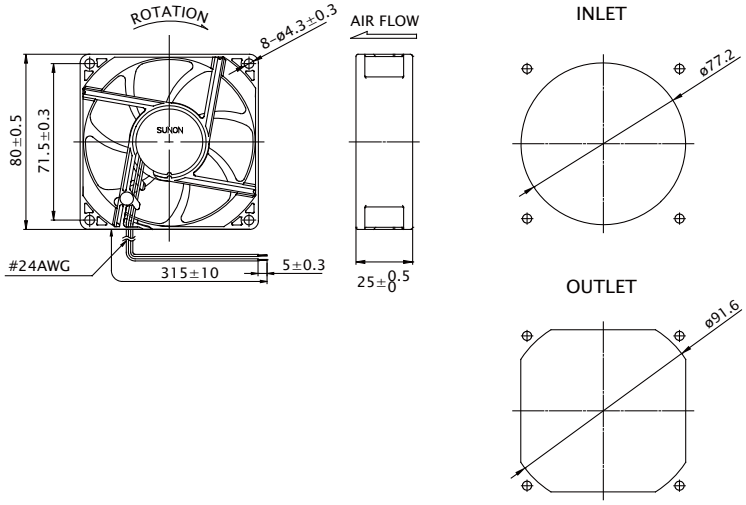

※ All model can be customized. Please contact Sunon Sales.
※ Specifications are subject to change without notice. Please Visit SUNON website at www.sunon.com for update information.

80x80x25 mm

33.0~41.0 CFM

Specification

Model	Bearing	Rated Voltage	Power Current	Power Consumption	Speed	Airflow	Static Pressure	Noise	Weight	Curve
	◐ 2BALL ○ Sleeve	(VDC)	(mA)	(WATTS)	(RPM)	(CFM)	(inch-H_2O)	(dB(A))	(g)	
EF80251B1-1000U-A99	◐	12	125	1.50	3200	41.0	0.18	33.0	75.0	1
EF80251B2-1000U-A99	◐	12	90	1.08	2900	37.0	0.15	30.0	75.0	2
EF80251B3-1000U-A99	◐	12	65	0.78	2600	33.0	0.11	28.0	75.0	3
EF80252B1-1000U-A99	◐	24	65	1.56	3200	41.0	0.18	33.0	75.0	1
EF80252B2-1000U-A99	◐	24	48	1.16	2900	37.0	0.15	30.0	75.0	2
EF80252B3-1000U-A99	◐	24	36	0.89	2600	33.0	0.11	28.0	75.0	3

Function

R Type : F99 ／ F Type : G99

Air Flow-Static Pressure Characteristics

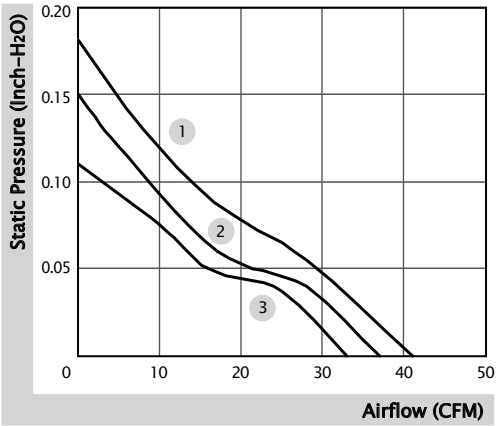

External Dimensions(mm)

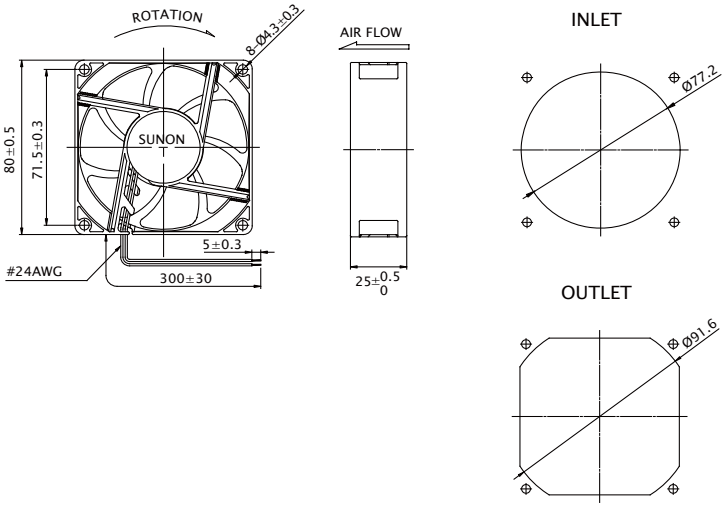

※ All model can be customized. Please contact Sunon Sales.

※ Specifications are subject to change without notice. Please Visit SUNON website at www.sunon.com for update information.

80x80x25 mm

23.9 CFM

Specification

MAGLev by SUNON	Bearing	Rated Voltage	Power Current	Power Consumption	Speed	Airflow	Static Pressure	Noise	Weight	Curve
	● VAPO	(VDC)	(mA)	(WATTS)	(RPM)	(CFM)	(inch-H_2O)	(dB(A))	(g)	
HA80251V4-1000U-A99	●	12	40	0.48	2000	23.9	0.07	20.4	75.0	1

Function F Type : G99

Air Flow-Static Pressure Characteristics

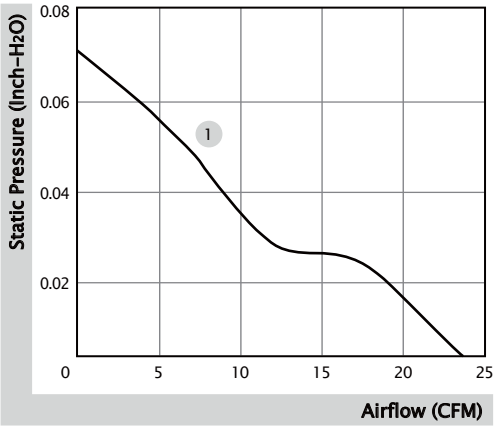

External Dimensions(mm)

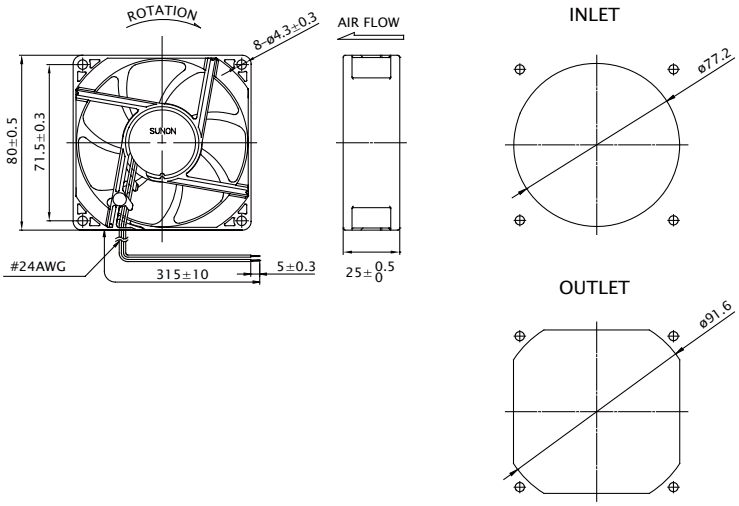

※ All model can be customized. Please contact Sunon Sales.

※ Specifications are subject to change without notice. Please Visit SUNON website at www.sunon.com for update information.

80x80x25 mm (IP56)

33.0~60.0 CFM

Specification

Model	Bearing	Rated Voltage	Power Current	Power Consumption	Speed	Airflow	Static Pressure	Noise	Weight	Curve
	◉ 2BALL ○ Sleeve	(VDC)	(mA)	(WATTS)	(RPM)	(CFM)	(inch-H_2O)	(dB(A))	(g)	
GF80251B1-000U-AC9	◉	12	330	3.96	4800	60.0	0.41	47.5	105.0	1
GF80251B2-000U-AC9	◉	12	255	3.06	4500	57.0	0.35	46.0	105.0	2
GF80251B3-000U-AC9	◉	12	200	2.40	4200	53.0	0.30	44.5	105.0	3
GF80251B5-000U-AC9	◉	12	145	1.74	3200	41.0	0.18	33.0	87.0	4
GF80251B6-000U-AC9	◉	12	120	1.44	2900	37.0	0.15	30.0	87.0	5
GF80251B7-000U-AC9	◉	12	84	1.01	2600	33.0	0.11	28.0	87.0	6
GE80252B1-000U-AC9	◉	24	200	4.80	4800	60.0	0.41	47.5	105.0	1
GE80252B2-000U-AC9	◉	24	166	3.99	4500	57.0	0.35	46.0	105.0	2
GE80252B3-000U-AC9	◉	24	137	3.29	4200	53.0	0.30	44.5	105.0	3
GF80252B5-000U-AC9	◉	24	73	1.76	3200	41.0	0.18	33.0	87.0	4
GF80252B6-000U-AC9	◉	24	59	1.42	2900	37.0	0.15	30.0	87.0	5
GF80252B7-000U-AC9	◉	24	45	1.08	2600	33.0	0.11	28.0	87.0	6

Function

(Speed 1, 2, 3) R Type : FC9 ／ F Type : GC9 ／ PWM : HC9, QC9, SC9
(Speed 5, 6, 7) R Type : FC9 ／ F Type : GC9

Air Flow-Static Pressure Characteristics

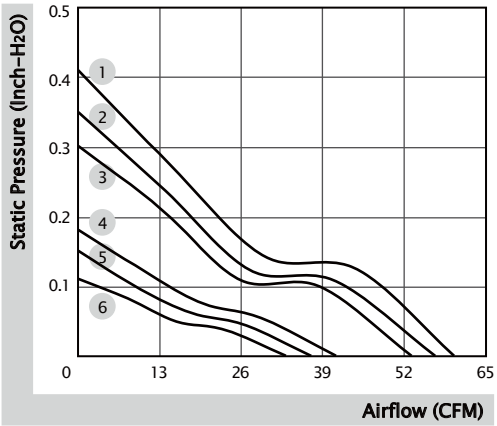

External Dimensions(mm)

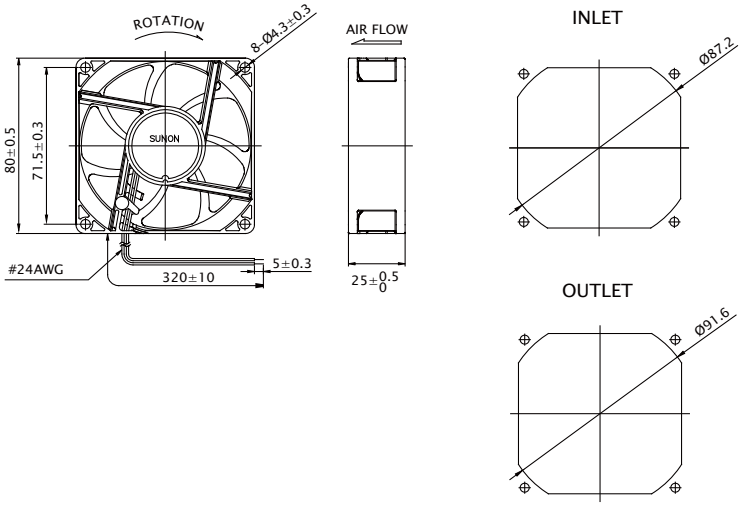

※ All model can be customized. Please contact Sunon Sales.
※ Specifications are subject to change without notice. Please Visit SUNON website at www.sunon.com for update information.

80x80x25 mm (IP68)

33.0~60.0 CFM

Specification

Model	Bearing	Rated Voltage	Power Current	Power Consumption	Speed	Airflow	Static Pressure	Noise	Weight	Curve
	◉ 2BALL ○ Sleeve	(VDC)	(mA)	(WATTS)	(RPM)	(CFM)	(inch-H_2O)	(dB(A))	(g)	
GF80251B1-000U-AE9	◉	12	330	3.96	4800	60.0	0.41	47.5	105.0	1
GF80251B2-000U-AE9	◉	12	255	3.06	4500	57.0	0.35	46.0	105.0	2
GF80251B3-000U-AE9	◉	12	200	2.40	4200	53.0	0.30	44.5	105.0	3
GF80251B5-000U-AE9	◉	12	145	1.74	3200	41.0	0.18	33.0	87.0	4
GF80251B6-000U-AE9	◉	12	120	1.44	2900	37.0	0.15	30.0	87.0	5
GF80251B7-000U-AE9	◉	12	84	1.01	2600	33.0	0.11	28.0	87.0	6
GE80252B1-000U-AE9	◉	24	200	4.80	4800	60.0	0.41	47.5	105.0	1
GE80252B2-000U-AE9	◉	24	166	3.99	4500	57.0	0.35	46.0	105.0	2
GE80252B3-000U-AE9	◉	24	137	3.29	4200	53.0	0.30	44.5	105.0	3
GF80252B5-000U-AE9	◉	24	73	1.76	3200	41.0	0.18	33.0	87.0	4
GF80252B6-000U-AE9	◉	24	59	1.42	2900	37.0	0.15	30.0	87.0	5
GF80252B7-000U-AE9	◉	24	45	1.08	2600	33.0	0.11	28.0	87.0	6

Function

(Speed 1, 2, 3) R Type : FE9 ／ F Type : GE9 ／ PWM : HE9, QE9, SE9
(Speed 5, 6, 7) R Type : FE9 ／ F Type : GE9

Air Flow-Static Pressure Characteristics

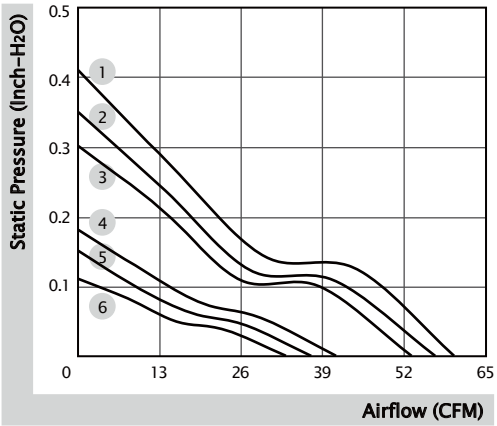

External Dimensions(mm)

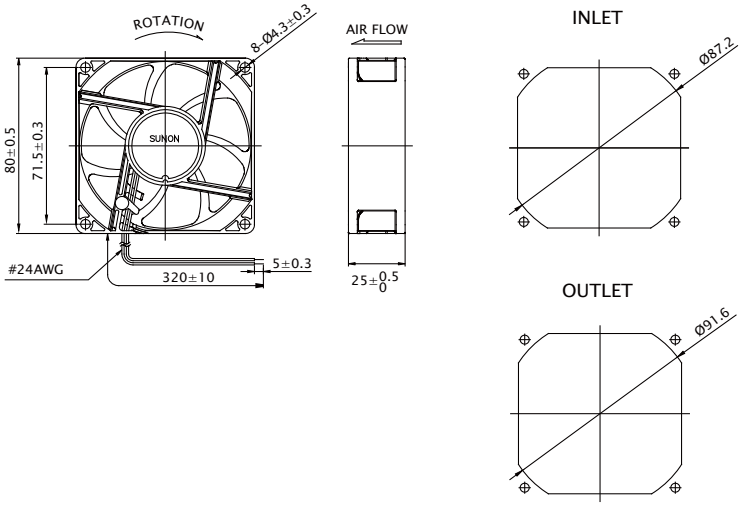

※ All model can be customized. Please contact Sunon Sales.
※ Specifications are subject to change without notice. Please Visit SUNON website at www.sunon.com for update information.

80x80x25 mm

45.0 CFM

Specification

Model	Bearing	Rated Voltage	Power Current	Power Consumption	Speed	Airflow	Static Pressure	Noise	Weight	Curve
	◉ 2BALL ○ Sleeve	(VDC)	(mA)	(WATTS)	(RPM)	(CFM)	(inch-H_2O)	(dB(A))	(g)	
EF80251BX-1000U-A99	◉	12	122	1.47	3600	45.0	0.23	36.1	89.0	1
EF80252BX-1000U-A99	◉	24	71	1.71	3600	45.0	0.23	36.1	89.0	1

Function

R Type : F99 ／ F Type : G99 ／ PWM : H99, Q99, S99

Air Flow-Static Pressure Characteristics

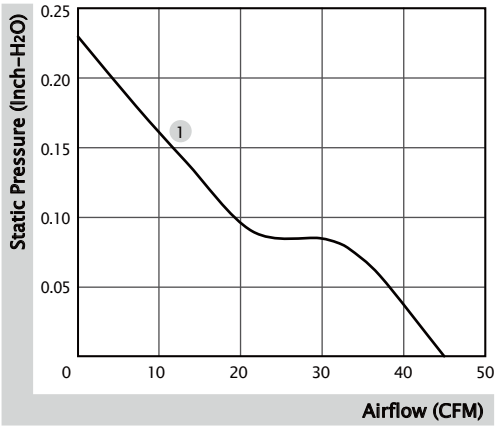

External Dimensions(mm)

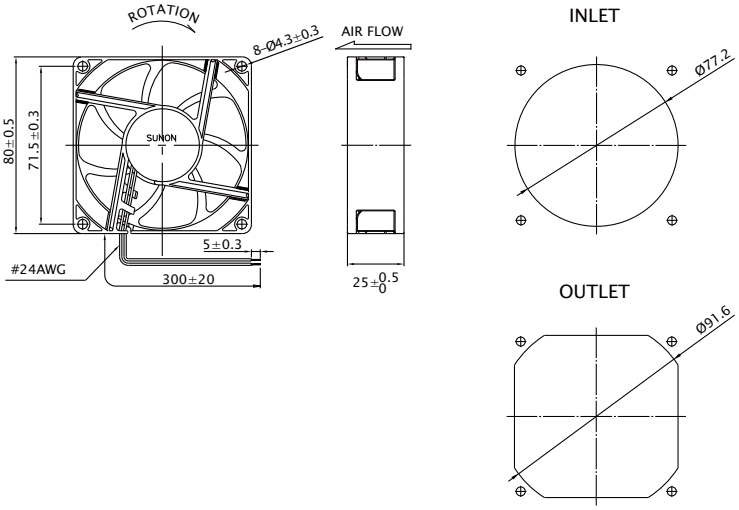

※ All model can be customized. Please contact Sunon Sales.

※ Specifications are subject to change without notice. Please Visit SUNON website at www.sunon.com for update information.

80x80x25 mm (GR487)

33.0~41.0 CFM

Specification

Model	Bearing	Rated Voltage	Power Current	Power Consumption	Speed	Airflow	Static Pressure	Noise	Weight	Curve
	◐ 2BALL ○ Sleeve	(VDC)	(mA)	(WATTS)	(RPM)	(CFM)	(inch-H_2O)	(dB(A))	(g)	
GF80251B5-000U-AD9	◐	12	145	1.74	3200	41.0	0.18	33.0	87.0	1
GF80251B6-000U-AD9	◐	12	120	1.44	2900	37.0	0.15	30.0	87.0	2
GF80251B7-000U-AD9	◐	12	84	1.01	2600	33.0	0.11	28.0	87.0	3
GF80252B5-000U-AD9	◐	24	73	1.76	3200	41.0	0.18	33.0	87.0	1
GF80252B6-000U-AD9	◐	24	59	1.42	2900	37.0	0.15	30.0	87.0	2
GF80252B7-000U-AD9	◐	24	45	1.08	2600	33.0	0.11	28.0	87.0	3

Function R Type : FD9 ／ F Type : GD9

Air Flow-Static Pressure Characteristics

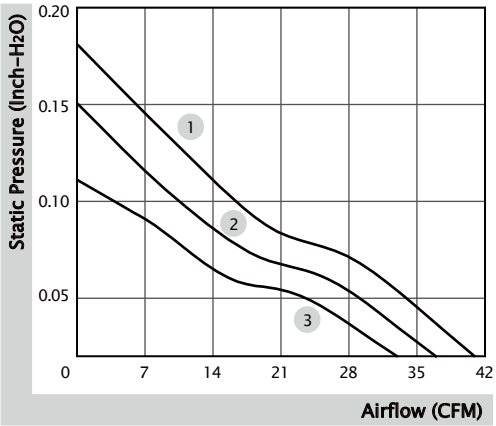

External Dimensions(mm)

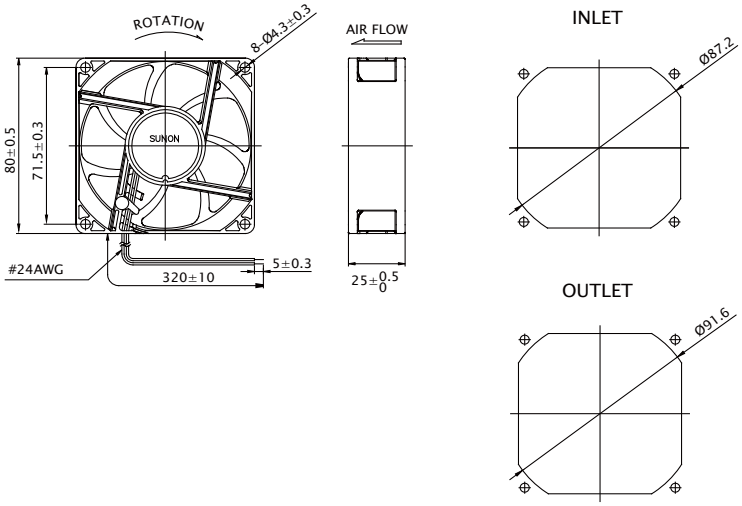

※ All model can be customized. Please contact Sunon Sales.

※ Specifications are subject to change without notice. Please Visit SUNON website at www.sunon.com for update information.

80x80x32 mm (IP56/IP68)

50.3~59.4 CFM

Specification

Model	Bearing	Rated Voltage	Power Current	Power Consumption	Speed	Airflow	Static Pressure	Noise	Weight	Curve
	◉ 2BALL ○ Sleeve	(VDC)	(mA)	(WATTS)	(RPM)	(CFM)	(inch-H_2O)	(dB(A))	(g)	
GF80321B1-000U-AC9	◉	12	310	3.72	4800	59.4	0.36	45.2	109.0	1
GF80321B2-000U-AC9	◉	12	230	2.76	4500	55.9	0.32	43.1	109.0	2
GF80321B3-000U-AC9	◉	12	190	2.28	4100	50.3	0.27	41.1	109.0	3
GF80321B1-000U-AE9	◉	12	310	3.72	4800	59.4	0.36	45.2	109.0	1
GF80321B2-000U-AE9	◉	12	230	2.76	4500	55.9	0.32	43.1	109.0	2
GF80321B3-000U-AE9	◉	12	190	2.28	4100	50.3	0.27	41.1	109.0	3

Function

(IP56) R Type : FC9 ／ F Type : GC9 ／ PWM : HC9, QC9, SC9
(IP68) R Type : FE9 ／ F Type : GE9 ／ PWM : HE9, QE9, SE9

Air Flow-Static Pressure Characteristics

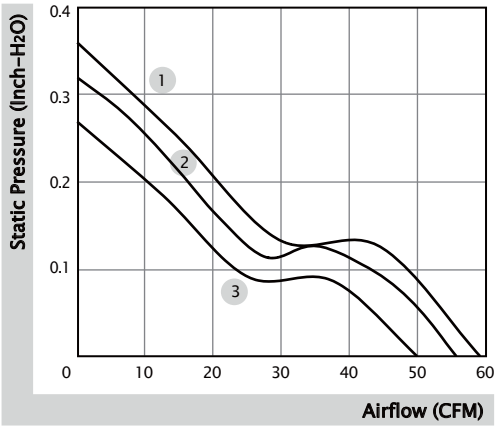

External Dimensions(mm)

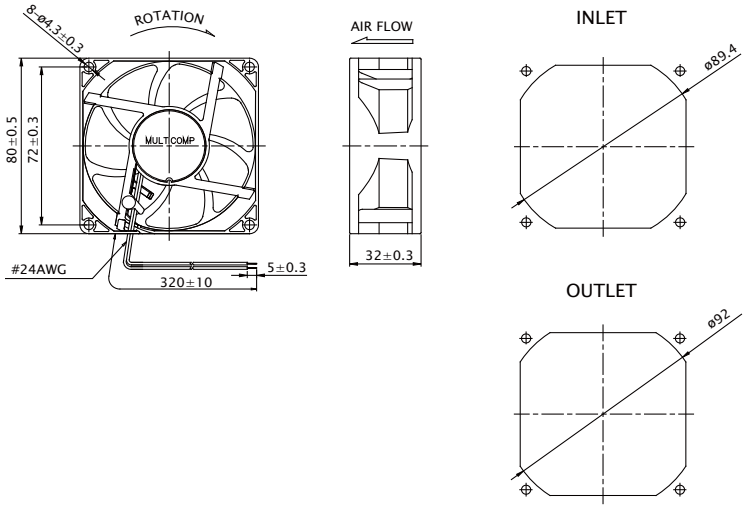

※ All model can be customized. Please contact Sunon Sales.
※ Specifications are subject to change without notice. Please Visit SUNON website at www.sunon.com for update information.

80x80x38 mm (IP68/GR487)

104.5~132.9 CFM

Specification

Model	Bearing	Rated Voltage	Power Current	Power Consumption	Speed	Airflow	Static Pressure	Noise	Weight	Curve
	◉ 2BALL ○ Sleeve	(VDC)	(mA)	(WATTS)	(RPM)	(CFM)	(inch-H_2O)	(dB(A))	(g)	
GF80382BX-1000U-AEP	◉	24	1630	39.12	10000	132.9	1.80	65.2	235.0	1
GF80382B1-1000U-AEP	◉	24	860	20.64	8000	104.5	1.13	59.7	235.0	2
GF80382BX-1000U-ADP	◉	24	1630	39.12	10000	132.9	1.80	65.2	235.0	1
GF80382B1-1000U-ADP	◉	24	860	20.64	8000	104.5	1.13	59.7	235.0	2

Function

(IP68) R Type : FEP ／ F Type : GEP ／ PWM : HEP, QEP, SEP
(GR487) R Type : FDP ／ F Type : GDP ／ PWM : HDP, QDP, SDP

Air Flow-Static Pressure Characteristics

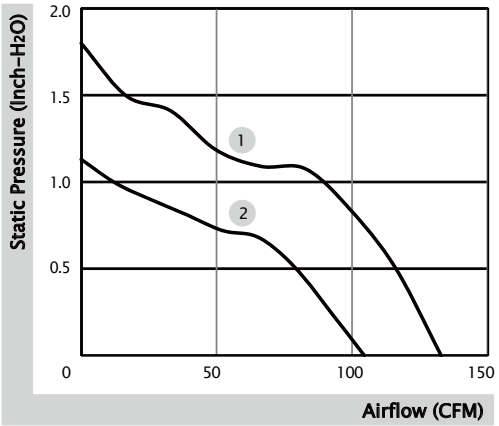

External Dimensions(mm)

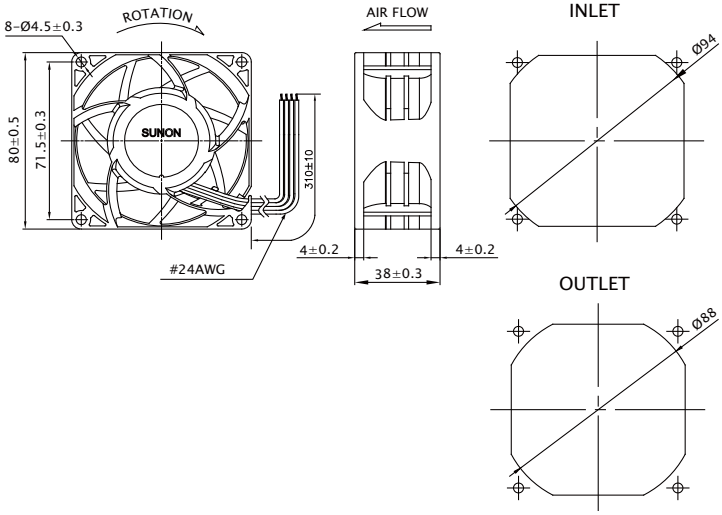

※ All model can be customized. Please contact Sunon Sales.
※ Specifications are subject to change without notice. Please Visit SUNON website at www.sunon.com for update information.

80x80x38 mm

113.9~141.9 CFM

Specification

Model	Bearing	Rated Voltage	Power Current	Power Consumption	Speed	Airflow	Static Pressure	Noise	Weight	Curve
	◉ 2BALL ○ Sleeve	(VDC)	(mA)	(WATTS)	(RPM)	(CFM)	(inch-H_2O)	(dB(A))	(g)	
PF80381BX-1000U-A9H	◉	12	4000	48.00	14000	141.9	3.50	69.1	195.0	1
PF80381B1-1000U-A9H	◉	12	1800	21.60	11200	113.9	2.68	63.4	195.0	2

Function

R Type : F9H ／ F Type : G9H ／ PWM : H9H, Q9H, S9H

Air Flow-Static Pressure Characteristics

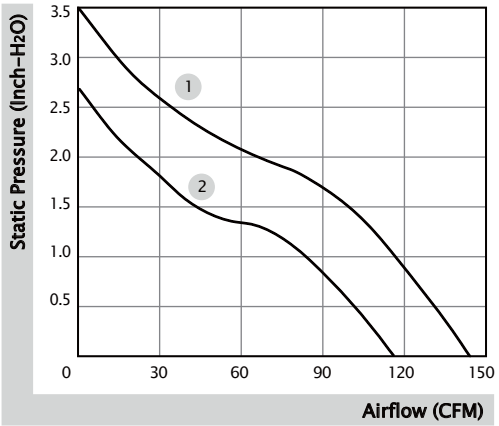

External Dimensions(mm)

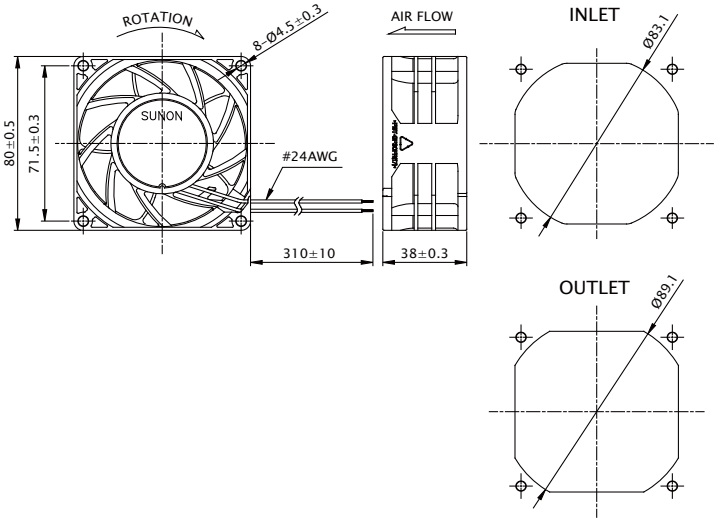

※ All model can be customized. Please contact Sunon Sales.

※ Specifications are subject to change without notice. Please Visit SUNON website at www.sunon.com for update information.

80x80x38 mm

105.8~134.3 CFM

Specification

Model	Bearing	Rated Voltage	Power Current	Power Consumption	Speed	Airflow	Static Pressure	Noise	Weight	Curve
	◐ 2BALL ○ Sleeve	(VDC)	(mA)	(WATTS)	(RPM)	(CFM)	(inch-H_2O)	(dB(A))	(g)	
PF80384BX-000U-A99	◐	48	700	33.60	12900	134.3	3.35	67.5	204.0	1
PF80384B1-000U-A99	◐	48	380	18.24	10500	105.8	2.46	62.6	204.0	2

Function

R Type : F99 ／ F Type : G99 ／ PWM : H99, Q99, S99

Air Flow-Static Pressure Characteristics

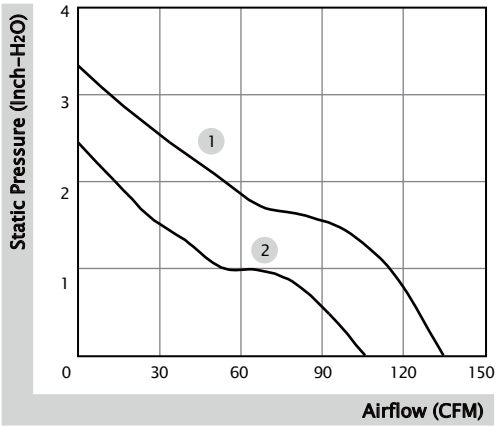

External Dimensions(mm)

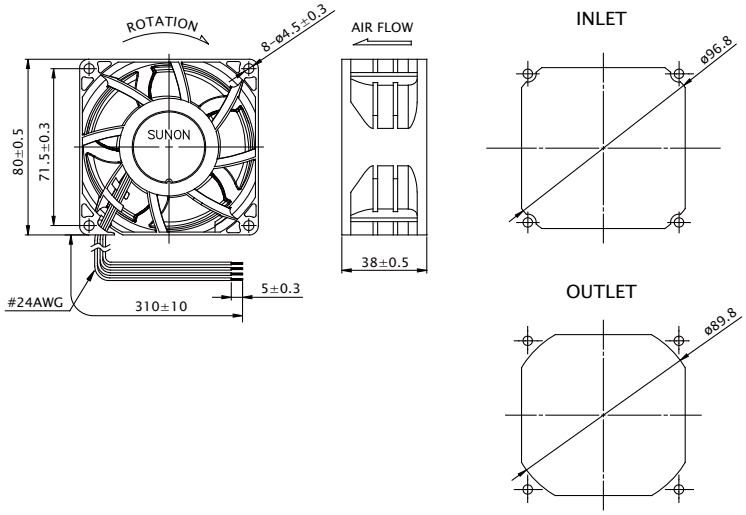

※ All model can be customized. Please contact Sunon Sales.

※ Specifications are subject to change without notice. Please Visit SUNON website at www.sunon.com for update information.

80x80x38 mm

59.5~84.1 CFM

Specification

Model	Bearing	Rated Voltage	Power Current	Power Consumption	Speed	Airflow	Static Pressure	Noise	Weight	Curve
	◉ 2BALL ○ Sleeve	(VDC)	(mA)	(WATTS)	(RPM)	(CFM)	(inch-H_2O)	(dB(A))	(g)	
PMD1208PMB1-A (2).GN	◉	12	760	9.1	5700	84.1	0.74	55.2	175.0	1
PMD1208PMB2-A (2).GN	◉	12	530	6.4	4900	74.5	0.57	51.6	175.0	2
PMD1208PMB3-A (2).GN	◉	12	370	4.4	4200	59.5	0.43	47.3	175.0	3
PMD2408PMB1-A (2).GN	◉	24	400	9.6	5700	84.1	0.74	55.2	175.0	1
PMD2408PMB2-A (2).GN	◉	24	300	7.2	4900	74.5	0.57	51.6	175.0	2
PMD2408PMB3-A (2).GN	◉	24	200	4.8	4200	59.5	0.43	47.3	175.0	3

Function

R Type : (2).R.GN ／ F Type : (2).F.GN

Air Flow-Static Pressure Characteristics

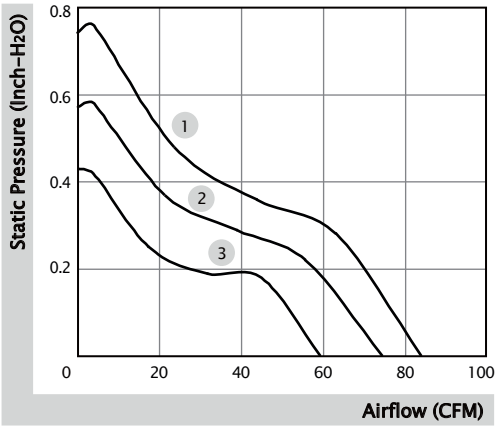

External Dimensions(mm)

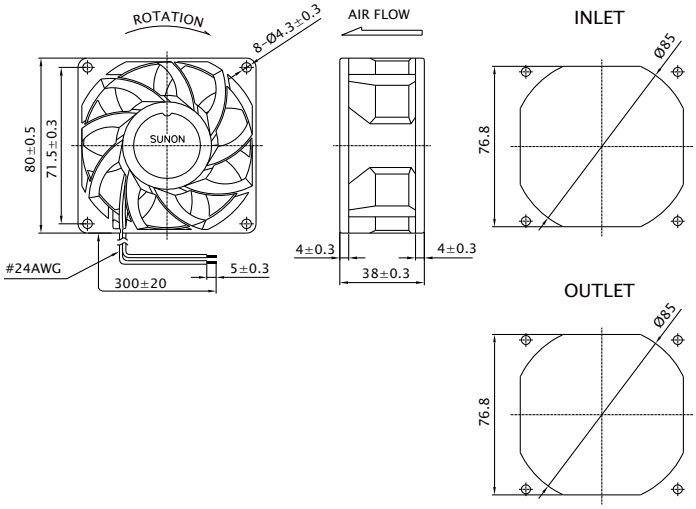

※ All model can be customized. Please contact Sunon Sales.

※ Specifications are subject to change without notice. Please Visit SUNON website at www.sunon.com for update information.

80x80x80 mm

122.0~151.5 CFM

Specification

Model	Bearing	Rated Voltage	Power Current	Power Consumption	Speed	Airflow	Static Pressure	Noise	Weight	Curve
	◐ 2BALL ○ Sleeve	(VDC)	(mA)	(WATTS)	(RPM)	(CFM)	(inch-H_2O)	(dB(A))	(g)	
PF80801BX-000U-A9H	◐	12	6800	81.60	15600/14100	151.5	5.44	80.4	464.0	1
PF80801B1-000U-A9H	◐	12	3500	42.00	12600/11300	122.0	3.66	75.1	464.0	2

Function F Type : G9H ／ PWM : S9H

Air Flow-Static Pressure Characteristics

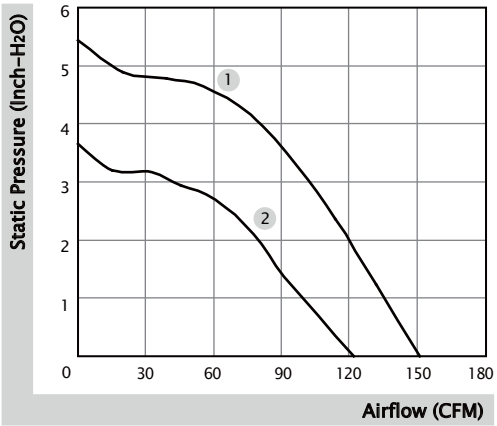

External Dimensions(mm)

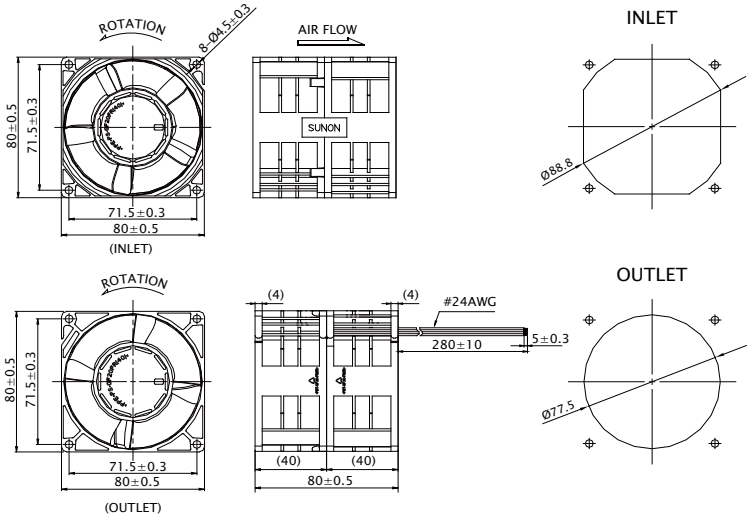

※ All model can be customized. Please contact Sunon Sales.

※ Specifications are subject to change without notice. Please Visit SUNON website at www.sunon.com for update information.

92x92x25 mm

65.0~75.0 CFM

Specification

MAGLev by SUNON	Bearing	Rated Voltage	Power Current	Power Consumption	Speed	Airflow	Static Pressure	Noise	Weight	Curve
	● VAPO	(VDC)	(mA)	(WATTS)	(RPM)	(CFM)	(inch-H_2O)	(dB(A))	(g)	
PF92251V1-1000U-A99	●	12	370	4.44	4500	75.0	0.35	45.5	106.0	1
PF92251V2-1000U-A99	●	12	280	3.36	4200	70.0	0.30	43.7	106.0	2
PF92251V3-1000U-A99	●	12	230	2.76	3900	65.0	0.25	41.6	106.0	3
PF92252V1-1000U-A99	●	24	210	5.04	4500	75.0	0.35	45.5	106.0	1
PF92252V2-1000U-A99	●	24	145	3.48	4200	70.0	0.30	43.7	106.0	2
PF92252V3-1000U-A99	●	24	126	3.03	3900	65.0	0.25	41.6	106.0	3

Function

R Type : F99 ／ F Type : G99 ／ PWM : H99, Q99, S99

Air Flow-Static Pressure Characteristics

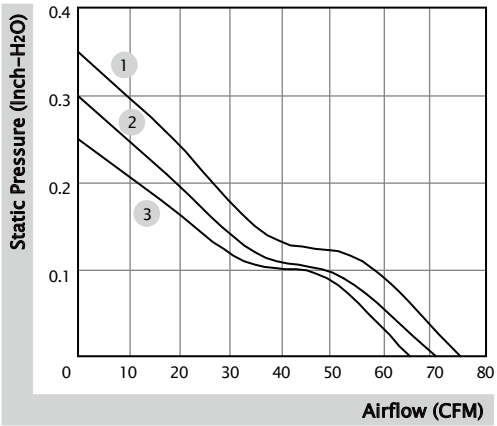

External Dimensions(mm)

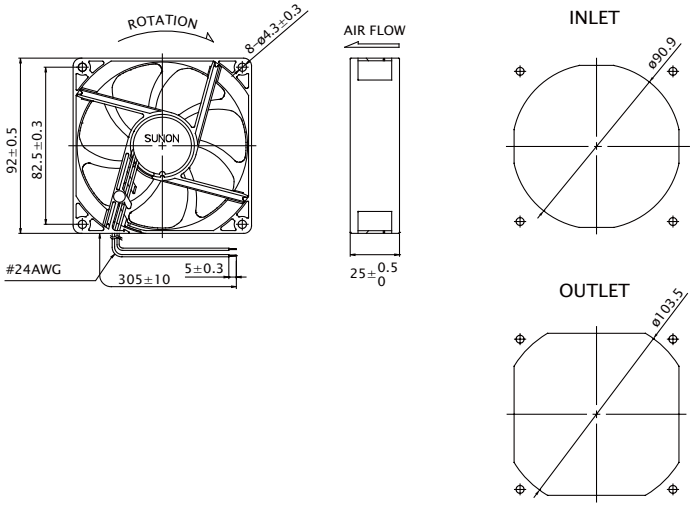

※ All model can be customized. Please contact Sunon Sales.

※ Specifications are subject to change without notice. Please Visit SUNON website at www.sunon.com for update information.

92x92x25 mm

65.0~75.0 CFM

Specification

Model	Bearing	Rated Voltage	Power Current	Power Consumption	Speed	Airflow	Static Pressure	Noise	Weight	Curve
	◉ 2BALL ○ Sleeve	(VDC)	(mA)	(WATTS)	(RPM)	(CFM)	(inch-H_2O)	(dB(A))	(g)	
PF92251B1-1000U-A99	◉	12	360	4.32	4500	75.0	0.35	46.1	103.0	1
PF92251B2-1000U-A99	◉	12	275	3.30	4200	70.0	0.30	44.0	103.0	2
PF92251B3-1000U-A99	◉	12	225	2.70	3900	65.0	0.25	41.8	103.0	3
PF92252B1-1000U-A99	◉	24	205	4.92	4500	75.0	0.35	46.1	103.0	1

Function

R Type : F99 ／ F Type : G99 ／ PWM : H99, Q99, S99

Air Flow-Static Pressure Characteristics

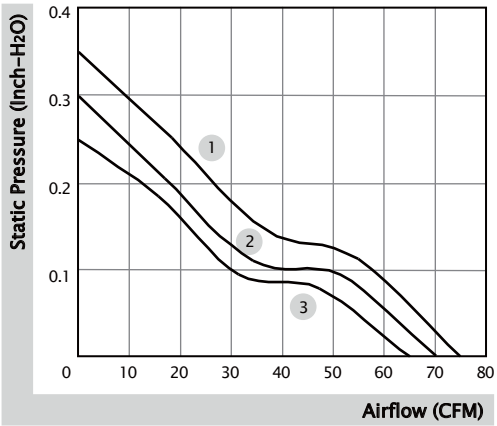

External Dimensions(mm)

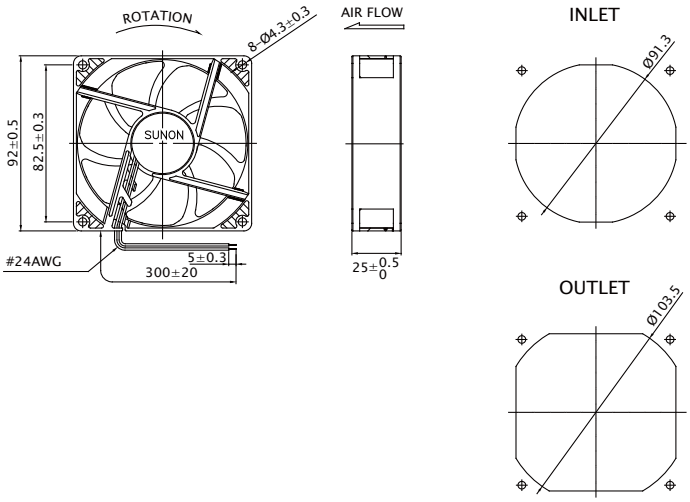

※ All model can be customized. Please contact Sunon Sales.

※ Specifications are subject to change without notice. Please Visit SUNON website at www.sunon.com for update information.

92x92x25 mm

39.5~51.5 CFM

Specification

MAGLev by SUNON	Bearing	Rated Voltage	Power Current	Power Consumption	Speed	Airflow	Static Pressure	Noise	Weight	Curve
	● VAPO	(VDC)	(mA)	(WATTS)	(RPM)	(CFM)	(inch-H_2O)	(dB(A))	(g)	
MF92251V1-1000U-A99	●	12	140	1.68	3000	51.5	0.15	34.0	92.0	1
MF92251V2-1000U-A99	●	12	105	1.26	2700	45.0	0.13	32.0	92.0	2
MF92251V3-1000U-A99	●	12	75	0.90	2400	39.5	0.10	28.0	92.0	3
MF92252V1-1000U-A99	●	24	75	1.80	3000	51.5	0.15	34.0	92.0	1
MF92252V2-1000U-A99	●	24	55	1.32	2700	45.0	0.13	32.0	92.0	2
MF92252V3-1000U-A99	●	24	42	1.01	2400	39.5	0.10	28.0	92.0	3
Model	2BALL ○ Sleeve	(VDC)	(mA)	(WATTS)	(RPM)	(CFM)	(inch-H_2O)	(dB(A))	(g)	
EF92251S1-1000U-A99	○	12	140	1.68	3000	51.5	0.15	34.0	92.0	1
EF92251S2-1000U-A99	○	12	110	1.32	2700	45.0	0.13	32.0	92.0	2
EF92251S3-1000U-A99	○	12	80	0.96	2400	39.5	0.10	28.0	92.0	3
EF92252S1-1000U-A99	○	24	60	1.44	3000	51.5	0.15	34.0	92.0	1

Function

(MF Series) R Type : F99 ／ F Type : G99
(EF Series, Speed 1) R Type : F99 ／ F Type : G99
(EF Series, Speed 2,3) F Type : G99

Air Flow-Static Pressure Characteristics

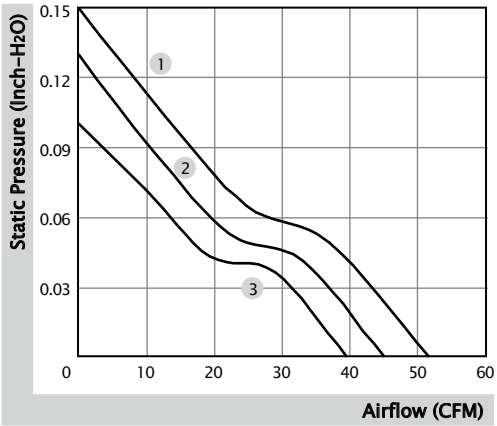

External Dimensions(mm)

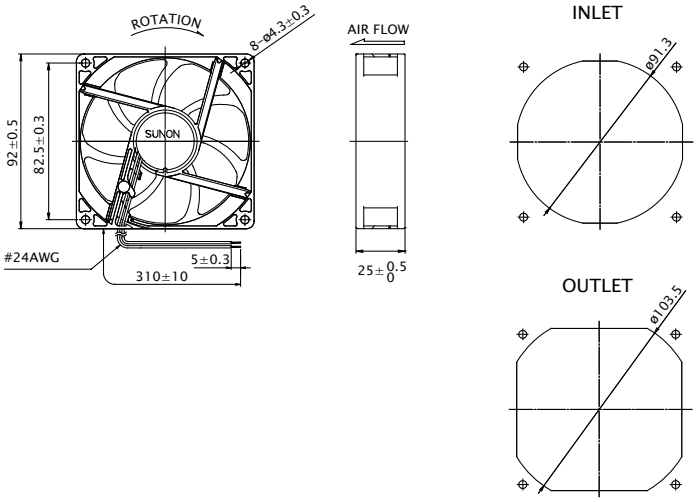

※ All model can be customized. Please contact Sunon Sales.
※ Specifications are subject to change without notice. Please Visit SUNON website at www.sunon.com for update information.

92x92x25 mm

39.5~51.5 CFM

Specification

Model	Bearing	Rated Voltage	Power Current	Power Consumption	Speed	Airflow	Static Pressure	Noise	Weight	Curve
	◉ 2BALL ○ Sleeve	(VDC)	(mA)	(WATTS)	(RPM)	(CFM)	(inch-H_2O)	(dB(A))	(g)	
EF92251B1-1000U-A99	◉	12	125	1.50	3000	51.5	0.17	34.0	92.0	1
EF92251B2-1000U-A99	◉	12	90	1.08	2700	45.0	0.15	32.0	92.0	2
EF92251B3-1000U-A99	◉	12	62	0.75	2400	39.5	0.12	28.0	92.0	3
EF92252B1-1000U-A99	◉	24	63	1.52	3000	51.5	0.17	34.0	92.0	1
EF92252B2-1000U-A99	◉	24	45	1.08	2700	45.0	0.15	32.0	92.0	2

Function R Type : F99 ／ F Type : G99

Air Flow-Static Pressure Characteristics

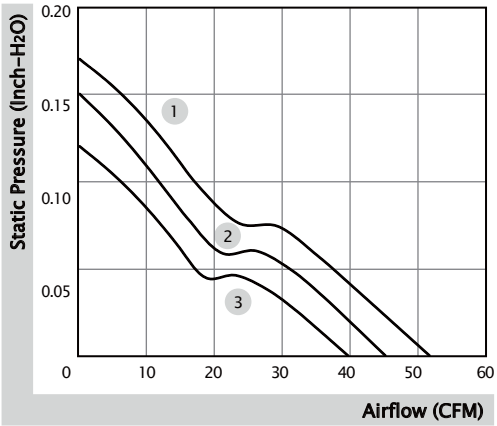

External Dimensions(mm)

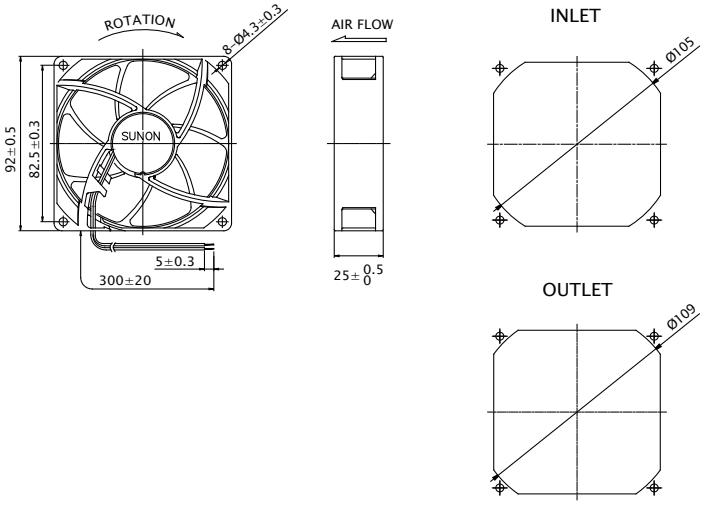

※ All model can be customized. Please contact Sunon Sales.

※ Specifications are subject to change without notice. Please Visit SUNON website at www.sunon.com for update information.

92x92x25 mm

55.0 CFM

Specification

Model	Bearing	Rated Voltage	Power Current	Power Consumption	Speed	Airflow	Static Pressure	Noise	Weight	Curve
	◉ 2BALL ○ Sleeve	(VDC)	(mA)	(WATTS)	(RPM)	(CFM)	(inch-H_2O)	(dB(A))	(g)	
EF92251BX-1000U-A99	◉	12	135	1.62	3400	55.0	0.21	36.9	111.0	1
EF92252BX-1000U-A99	◉	24	90	2.16	3400	55.0	0.21	36.9	109.0	1

Function

R Type : F99 ／ F Type : G99 ／ PWM : H99, Q99, S99

Air Flow-Static Pressure Characteristics

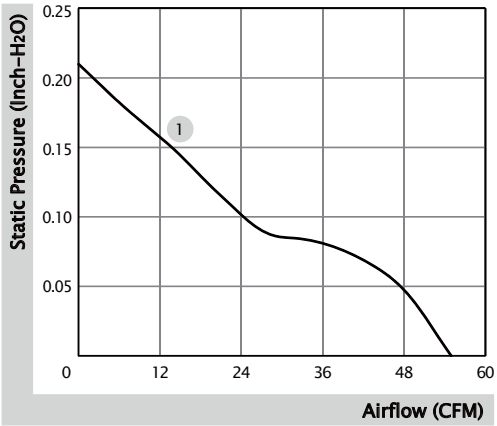

External Dimensions(mm)

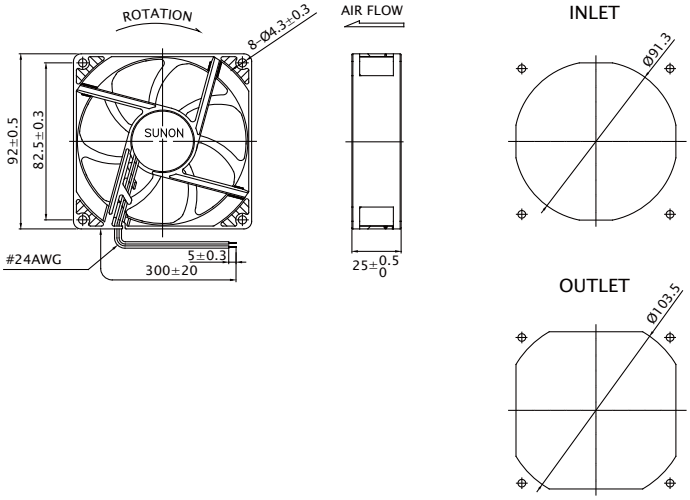

※ All model can be customized. Please contact Sunon Sales.

※ Specifications are subject to change without notice. Please Visit SUNON website at www.sunon.com for update information.

92x92x25 mm

28.4 CFM

Specification

MAGLev by SUNON	Bearing	Rated Voltage	Power Current	Power Consumption	Speed	Airflow	Static Pressure	Noise	Weight	Curve
	● VAPO	(VDC)	(mA)	(WATTS)	(RPM)	(CFM)	(inch-H_2O)	(dB(A))	(g)	
HA92251V4-1000U-A99	●	12	45	0.54	1700	28.4	0.05	17.7	92.0	1

Function F Type : G99

Air Flow-Static Pressure Characteristics

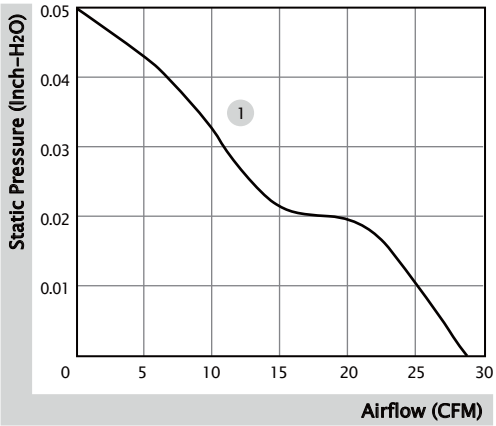

External Dimensions(mm)

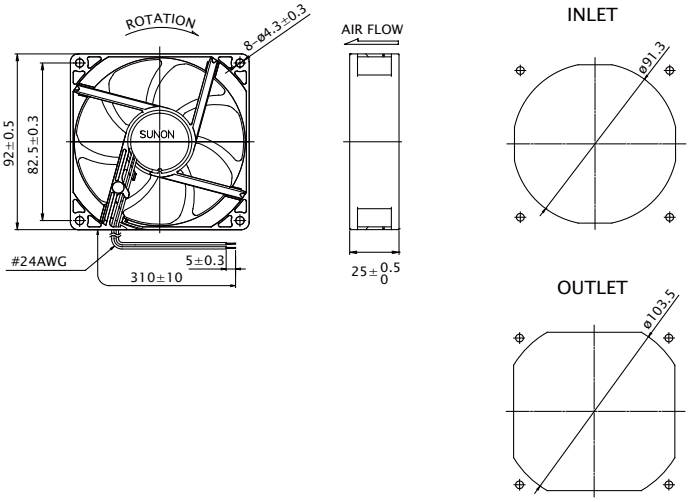

※ All model can be customized. Please contact Sunon Sales.

※ Specifications are subject to change without notice. Please Visit SUNON website at www.sunon.com for update information.

92x92x25 mm (IP56)

39.5~75.0 CFM

Specification

Model	Bearing	Rated Voltage	Power Current	Power Consumption	Speed	Airflow	Static Pressure	Noise	Weight	Curve
	◉ 2BALL ○ Sleeve	(VDC)	(mA)	(WATTS)	(RPM)	(CFM)	(inch-H_2O)	(dB(A))	(g)	
GF92251B1-000U-AC9	◉	12	393	4.72	4500	75.0	0.35	47.0	113.0	1
GF92251B2-000U-AC9	◉	12	300	3.60	4200	70.0	0.30	45.0	113.0	2
GF92251B3-000U-AC9	◉	12	230	2.76	3900	65.0	0.25	43.0	113.0	3
GF92251B5-000U-AC9	◉	12	165	1.98	3000	51.5	0.15	34.0	99.0	4
GF92251B6-000U-AC9	◉	12	135	1.62	2700	45.0	0.13	32.0	99.0	5
GF92251B7-000U-AC9	◉	12	91	1.10	2400	39.5	0.10	28.0	99.0	6
GE92252B1-000U-AC9	◉	24	220	5.28	4500	75.0	0.35	47.0	113.0	1
GE92252B2-000U-AC9	◉	24	180	4.32	4200	70.0	0.30	45.0	113.0	2
GE92252B3-000U-AC9	◉	24	155	3.72	3900	65.0	0.25	43.0	113.0	3
GF92252B5-000U-AC9	◉	24	87	2.09	3000	51.5	0.15	34.0	99.0	4
GF92252B6-000U-AC9	◉	24	65	1.56	2700	45.0	0.13	32.0	99.0	5
GF92252B7-000U-AC9	◉	24	47	1.13	2400	39.5	0.10	28.0	99.0	6

Function

(Speed 1, 2, 3) R Type : FC9 ／ F Type : GC9 ／ PWM : HC9, QC9, SC9
(Speed 4, 5, 6) R Type : FC9 ／ F Type : GC9

Air Flow-Static Pressure Characteristics

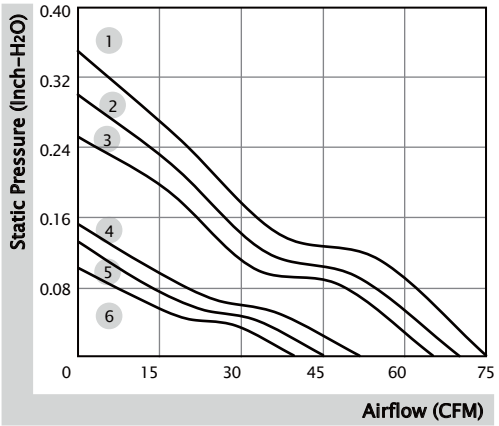

External Dimensions(mm)

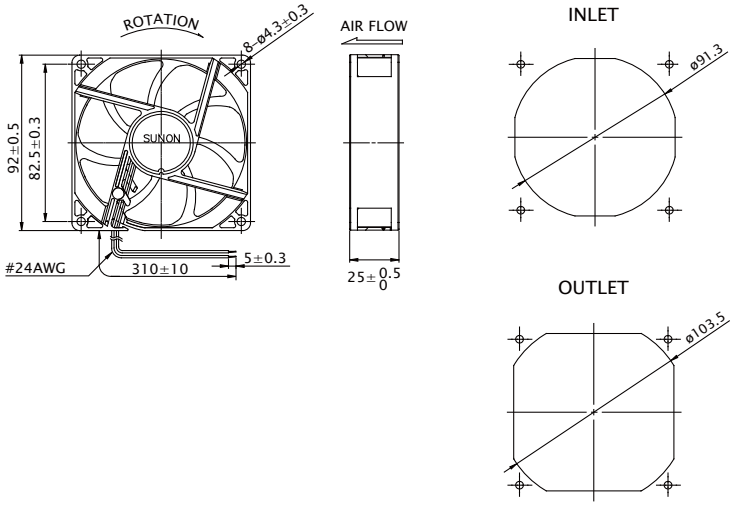

※ All model can be customized. Please contact Sunon Sales.
※ Specifications are subject to change without notice. Please Visit SUNON website at www.sunon.com for update information.

92x92x25 mm (IP68)

39.5~75.0 CFM

Specification

Model	Bearing	Rated Voltage	Power Current	Power Consumption	Speed	Airflow	Static Pressure	Noise	Weight	Curve
	◉ 2BALL ○ Sleeve	(VDC)	(mA)	(WATTS)	(RPM)	(CFM)	(inch-H_2O)	(dB(A))	(g)	
GF92251B1-000U-AE9	◉	12	393	4.72	4500	75.0	0.35	47.0	113.0	1
GF92251B2-000U-AE9	◉	12	300	3.60	4200	70.0	0.30	45.0	113.0	2
GF92251B3-000U-AE9	◉	12	230	2.76	3900	65.0	0.25	43.0	113.0	3
GF92251B5-000U-AE9	◉	12	165	1.98	3000	51.5	0.15	34.0	99.0	4
GF92251B6-000U-AE9	◉	12	135	1.62	2700	45.0	0.13	32.0	99.0	5
GF92251B7-000U-AE9	◉	12	91	1.10	2400	39.5	0.10	28.0	99.0	6
GE92252B1-000U-AE9	◉	24	220	5.28	4500	75.0	0.35	47.0	113.0	1
GE92252B2-000U-AE9	◉	24	180	4.32	4200	70.0	0.30	45.0	113.0	2
GE92252B3-000U-AE9	◉	24	155	3.72	3900	65.0	0.25	43.0	113.0	3
GF92252B5-000U-AE9	◉	24	87	2.09	3000	51.5	0.15	34.0	99.0	4
GF92252B6-000U-AE9	◉	24	65	1.56	2700	45.0	0.13	32.0	99.0	5
GF92252B7-000U-AE9	◉	24	47	1.13	2400	39.5	0.10	28.0	99.0	6

Function

(Speed 1, 2, 3) R Type : FE9 ／ F Type : GE9 ／ PWM : HE9, QE9, SE9
(Speed 4, 5, 6) R Type : FE9 ／ F Type : GE9

Air Flow-Static Pressure Characteristics

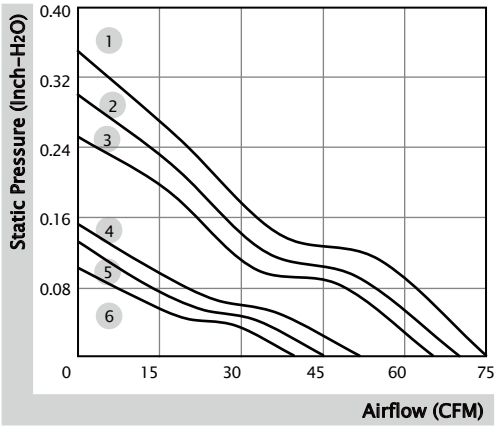

External Dimensions(mm)

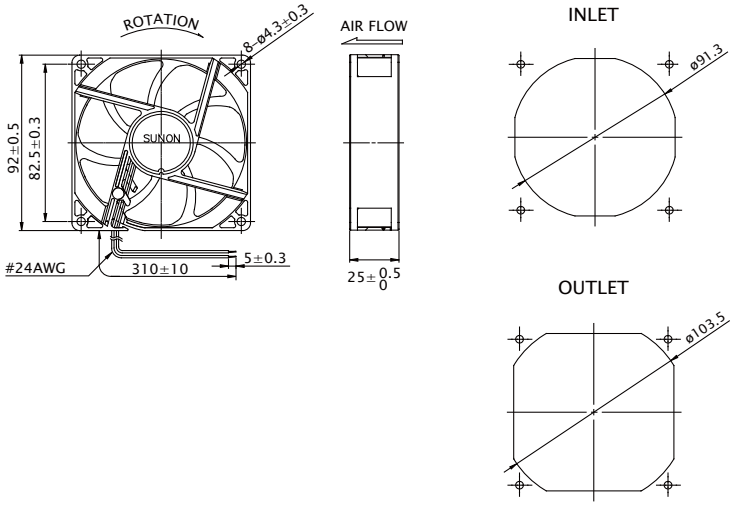

※ All model can be customized. Please contact Sunon Sales.
※ Specifications are subject to change without notice. Please Visit SUNON website at www.sunon.com for update information.

92x92x25 mm (GR487)

39.5~51.5 CFM

Specification

Model	Bearing	Rated Voltage	Power Current	Power Consumption	Speed	Airflow	Static Pressure	Noise	Weight	Curve
	◉ 2BALL ○ Sleeve	(VDC)	(mA)	(WATTS)	(RPM)	(CFM)	(inch-H_2O)	(dB(A))	(g)	
GF92251B5-000U-AD9	◉	12	165	1.98	3000	51.5	0.15	34.0	99.0	1
GF92251B6-000U-AD9	◉	12	135	1.62	2700	45.0	0.13	32.0	99.0	2
GF92251B7-000U-AD9	◉	12	91	1.10	2400	39.5	0.10	28.0	99.0	3
GF92252B5-000U-AD9	◉	24	87	2.09	3000	51.5	0.15	34.0	99.0	1
GF92252B6-000U-AD9	◉	24	65	1.56	2700	45.0	0.13	32.0	99.0	2
GF92252B7-000U-AD9	◉	24	47	1.13	2400	39.5	0.10	28.0	99.0	3

Function R Type : FD9 ／ F Type : GD9

Air Flow-Static Pressure Characteristics

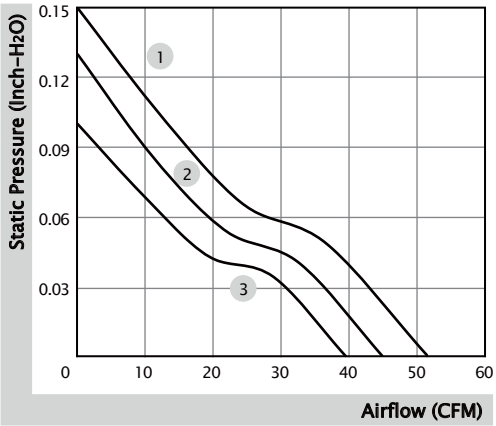

External Dimensions(mm)

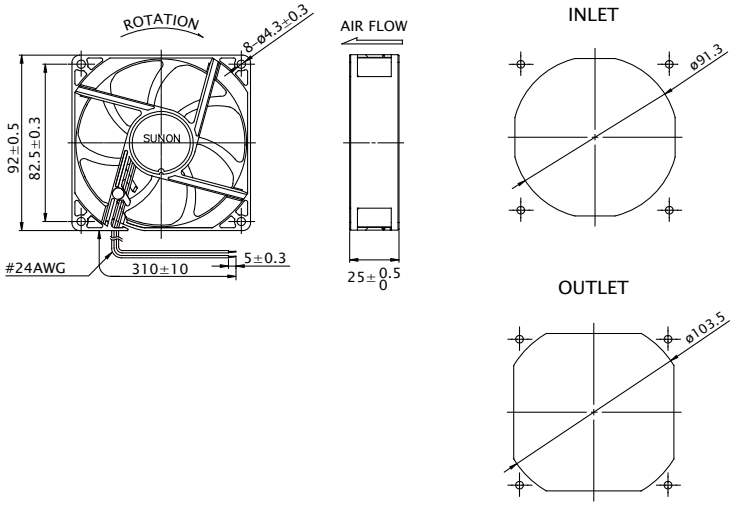

※ All model can be customized. Please contact Sunon Sales.

※ Specifications are subject to change without notice. Please Visit SUNON website at www.sunon.com for update information.

92x92x38 mm (IP68/GR487)

145.3~172.9 CFM

Specification

Model	Bearing	Rated Voltage	Power Current	Power Consumption	Speed	Airflow	Static Pressure	Noise	Weight	Curve
	◉ 2BALL ○ Sleeve	(VDC)	(mA)	(WATTS)	(RPM)	(CFM)	(inch-H_2O)	(dB(A))	(g)	
GF92382BX-1000U-AEP	◉	24	1700	40.80	9000	172.9	1.73	66.8	260.0	1
GF92382B1-1000U-AEP	◉	24	850	20.40	7200	145.3	1.20	60.6	260.0	2
GF92382BX-1000U-ADP	◉	24	1700	40.80	9000	172.9	1.73	66.8	260.0	1
GF92382B1-1000U-ADP	◉	24	850	20.40	7200	145.3	1.20	60.6	260.0	2

Function

(IP68) R Type : FEP ／ F Type : GEP ／ PWM : HEP, QEP, SEP
(GR487) R Type : FDP ／ F Type : GDP ／ PWM : HDP, QDP, SDP

Air Flow-Static Pressure Characteristics

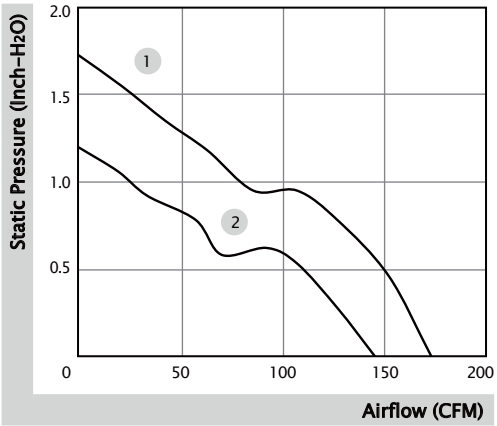

External Dimensions(mm)

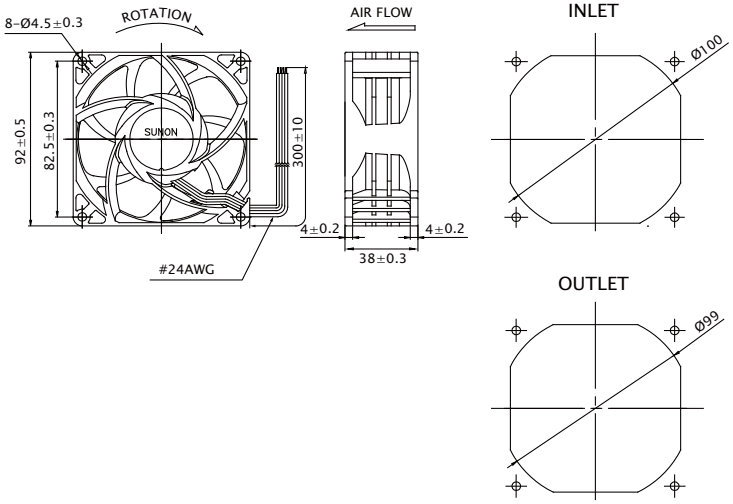

※ All model can be customized. Please contact Sunon Sales.
※ Specifications are subject to change without notice. Please Visit SUNON website at www.sunon.com for update information.

92x92x38 mm

91.7~182.4 CFM

Specification

Model	Bearing	Rated Voltage	Power Current	Power Consumption	Speed	Airflow	Static Pressure	Noise	Weight	Curve
	◉ 2BALL ○ Sleeve	(VDC)	(mA)	(WATTS)	(RPM)	(CFM)	(inch-H_2O)	(dB(A))	(g)	
PF92381BX-1000U-A9H	◉	12	4200	50.40	12000	182.4	2.94	70.2	227.0	1
PF92381B1-1000U-A9H	◉	12	1850	22.20	9300	138.1	1.95	62.9	227.0	2
PF92381B2-1000U-A9H	◉	12	935	11.22	5800	120.2	0.72	54.7	202.0	3
PF92381B3-1000U-A9H	◉	12	485	5.82	4700	91.7	0.51	49.5	202.0	4
PF92382B2-1000U-A9H	◉	24	480	11.52	5800	120.2	0.72	54.7	190.0	3
PF92382B3-1000U-A9H	◉	24	250	6.00	4700	91.7	0.51	49.5	190.0	4

Function

R Type : F9H ／ F Type : G9H ／ PWM : H9H, Q9H, S9H

Air Flow-Static Pressure Characteristics

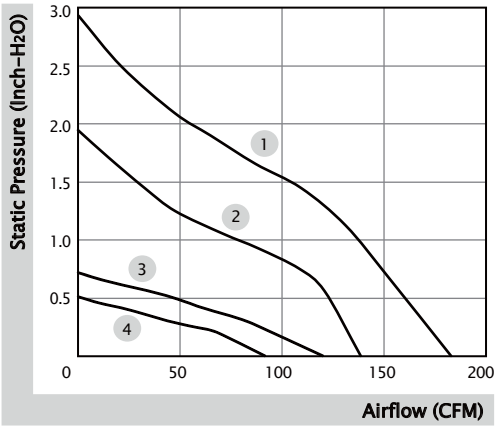

External Dimensions(mm)

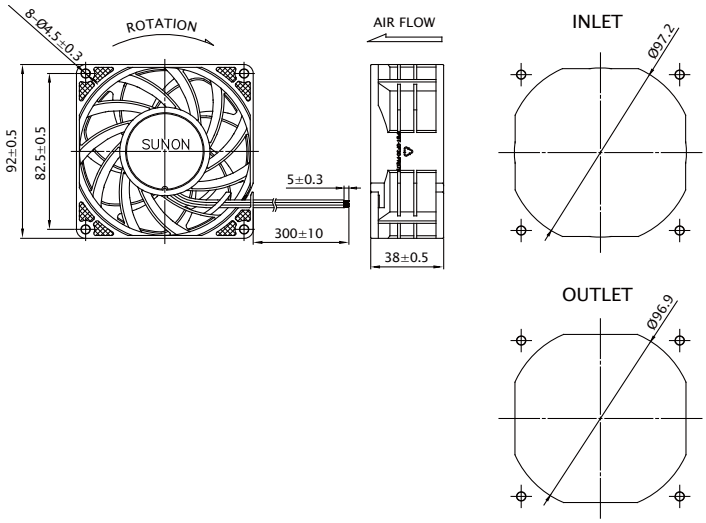

※ All model can be customized. Please contact Sunon Sales.

※ Specifications are subject to change without notice. Please Visit SUNON website at www.sunon.com for update information.

92x92x38 mm

91.7~120.2 CFM

Specification

Model	Bearing	Rated Voltage	Power Current	Power Consumption	Speed	Airflow	Static Pressure	Noise	Weight	Curve
	◉ 2BALL ○ Sleeve	(VDC)	(mA)	(WATTS)	(RPM)	(CFM)	(inch-H_2O)	(dB(A))	(g)	
PMD1209PMB1-A (2).GN	◉	12	1040	12.5	4900	120.2	0.71	57.6	190.0	1
PMD1209PMB2-A (2).GN	◉	12	710	8.5	4400	106.3	0.56	53.8	190.0	2
PMD1209PMB3-A (2).GN	◉	12	470	5.6	3800	91.7	0.43	50.3	190.0	3
PMD2409PMB1-A (2).GN	◉	24	510	12.2	4900	120.2	0.71	57.6	190.0	1
PMD2409PMB2-A (2).GN	◉	24	400	9.6	4400	106.3	0.56	53.8	190.0	2
PMD2409PMB3-A (2).GN	◉	24	250	6.0	3800	91.7	0.43	50.3	190.0	3

Function

R Type : (2).R.GN ／ F Type : (2).F.GN

Air Flow-Static Pressure Characteristics

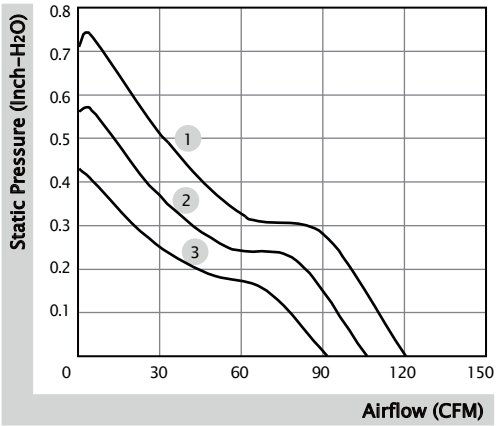

External Dimensions(mm)

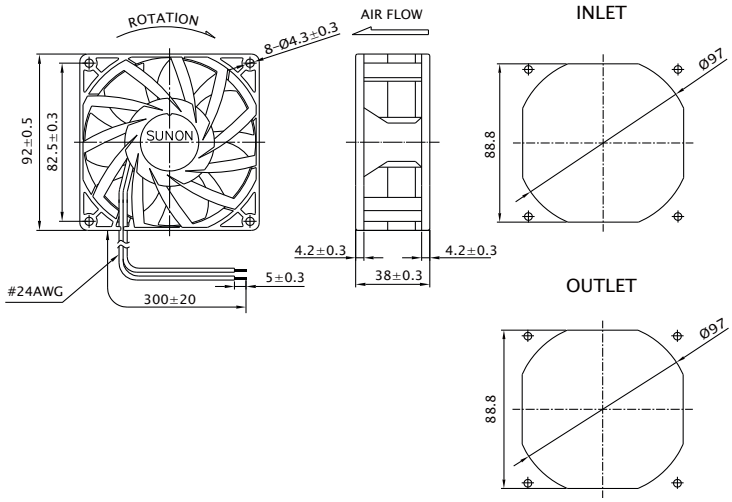

※ All model can be customized. Please contact Sunon Sales.

※ Specifications are subject to change without notice. Please Visit SUNON website at www.sunon.com for update information.

120x120x25 mm

120.0~150.0 CFM

Specification

Model	Bearing	Rated Voltage	Power Current	Power Consumption	Speed	Airflow	Static Pressure	Noise	Weight	Curve
	◉ 2BALL ○ Sleeve	(VDC)	(mA)	(WATTS)	(RPM)	(CFM)	(inch-H_2O)	(dB(A))	(g)	
PMD1212PTB1-A (2).GN	◉	12	1000	12.0	4500	150.0	0.62	54.0	220.0	1
PMD1212PTB2-A (2).GN	◉	12	720	8.6	4000	133.0	0.50	51.0	220.0	2
PMD1212PTB3-A (2).GN	◉	12	540	6.5	3600	120.0	0.41	48.0	220.0	3
PMD2412PTB1-A (2).GN	◉	24	490	11.8	4500	150.0	0.62	54.0	220.0	1
PMD2412PTB3-A (2).GN	◉	24	280	6.7	3600	120.0	0.41	48.0	220.0	3

Function

R Type : (2).R.GN ／ F Type : (2).F.GN

Air Flow-Static Pressure Characteristics

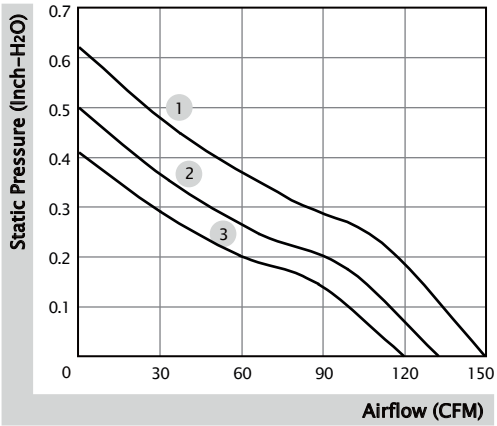

External Dimensions(mm)

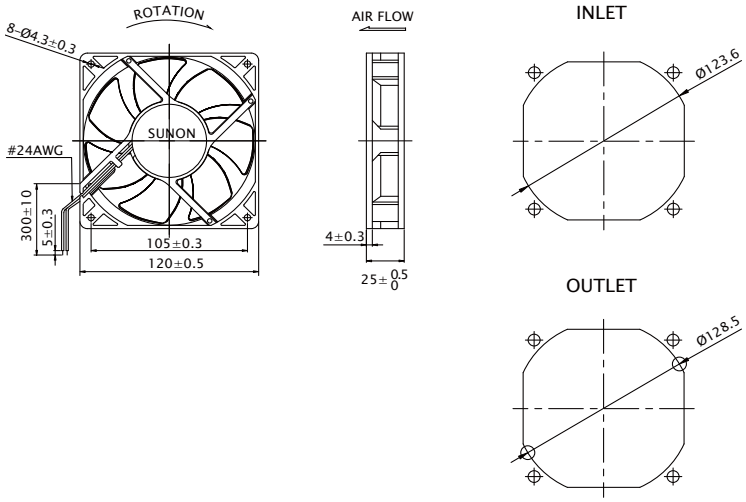

※ All model can be customized. Please contact Sunon Sales.

※ Specifications are subject to change without notice. Please Visit SUNON website at www.sunon.com for update information.

120x120x25 mm

75.0~108.2 CFM

Specification

MAGLev by SUNON	Bearing	Rated Voltage	Power Current	Power Consumption	Speed	Airflow	Static Pressure	Noise	Weight	Curve
	● VAPO	(VDC)	(mA)	(WATTS)	(RPM)	(CFM)	(inch-H_2O)	(dB(A))	(g)	
MFC0251V1-000U-A99	●	12	350	4.20	3100	108.2	0.28	44.5	162.0	1
MFC0251V2-000U-A99	●	12	250	3.00	2700	93.0	0.22	40.5	162.0	2
MFC0251V3-000U-A99	●	12	140	1.68	2200	75.0	0.16	34.0	162.0	3
MEC0252V1-000U-A99	●	24	207	5.00	3100	108.2	0.28	44.5	162.0	1
MEC0252V2-000U-A99	●	24	146	3.50	2700	93.0	0.22	40.5	162.0	2
MEC0252V3-000U-A99	●	24	84	2.00	2200	75.0	0.16	34.0	162.0	3
Model	2BALL / Sleeve	(VDC)	(mA)	(WATTS)	(RPM)	(CFM)	(inch-H_2O)	(dB(A))	(g)	
EEC0251B1-000U-A99	◐	12	451	5.4	3100	108.2	0.28	44.5	157.0	1
EEC0251B2-000U-A99	◐	12	279	3.4	2700	93.0	0.22	40.5	157.0	2
EEC0251B3-000U-A99	◐	12	161	1.9	2200	75.0	0.16	34.0	157.0	3
EEC0252B1-000U-A99	◐	24	207	5.0	3100	108.2	0.28	44.5	157.0	1
EEC0252B2-000U-A99	◐	24	146	3.5	2700	93.0	0.22	40.5	157.0	2
EEC0252B3-000U-A99	◐	24	84	2.0	2200	75.0	0.16	34.0	157.0	3
EEC0254B1-000U-A99	◐	48	119	5.7	3100	108.2	0.28	44.5	157.0	1
EEC0254B2-000U-A99	◐	48	79	3.8	2700	93.0	0.22	40.5	157.0	2
EEC0254B3-000U-A99	◐	48	54	2.6	2200	75.0	0.16	34.0	157.0	3

Function R Type : F99 ／ F Type : G99

Air Flow-Static Pressure Characteristics

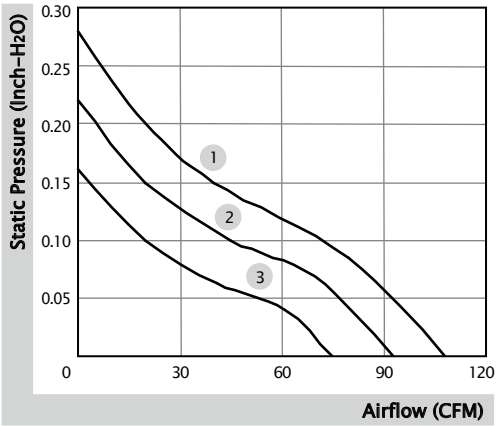

External Dimensions(mm)

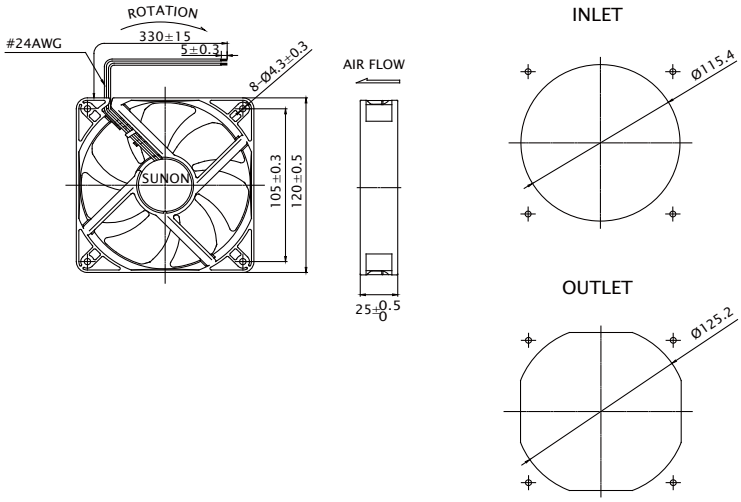

※ All model can be customized. Please contact Sunon Sales.

※ Specifications are subject to change without notice. Please Visit SUNON website at www.sunon.com for update information.

120x120x25 mm

55.1 CFM

Specification

Model	Bearing	Rated Voltage	Power Current	Power Consumption	Speed	Airflow	Static Pressure	Noise	Weight	Curve
	◉ 2BALL ○ Sleeve	(VDC)	(mA)	(WATTS)	(RPM)	(CFM)	(inch-H_2O)	(dB(A))	(g)	
HAC0251S4-1000U-999	○	12	88	1.06	1600	55.1	0.07	28.8	106.0	1

Function F Type : C99

Air Flow-Static Pressure Characteristics

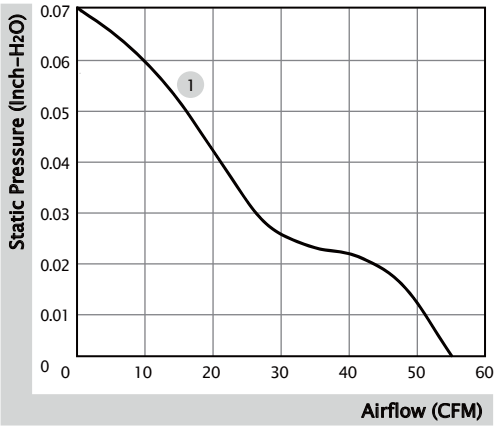

External Dimensions(mm)

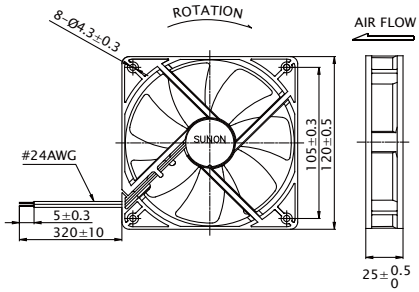

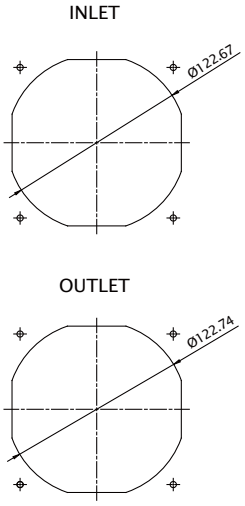

※ All model can be customized. Please contact Sunon Sales.

※ Specifications are subject to change without notice. Please Visit SUNON website at www.sunon.com for update information.

120x120x38 mm

301.7 CFM

Specification

Model	Bearing	Rated Voltage	Power Current	Power Consumption	Speed	Airflow	Static Pressure	Noise	Weight	Curve
	⊕ 2BALL ○ Sleeve	(VDC)	(mA)	(WATTS)	(RPM)	(CFM)	(inch-H_2O)	(dB(A))	(g)	
XGC0384BX-1000U-A9H	⊕	48	2100	100.8	11600	301.7	5.58	75.0	465.0	1

Function F Type : G9H ／ PWM : H9H, S9H

Air Flow-Static Pressure Characteristics

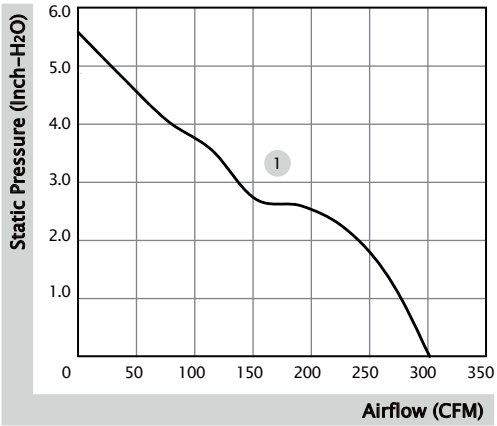

External Dimensions(mm)

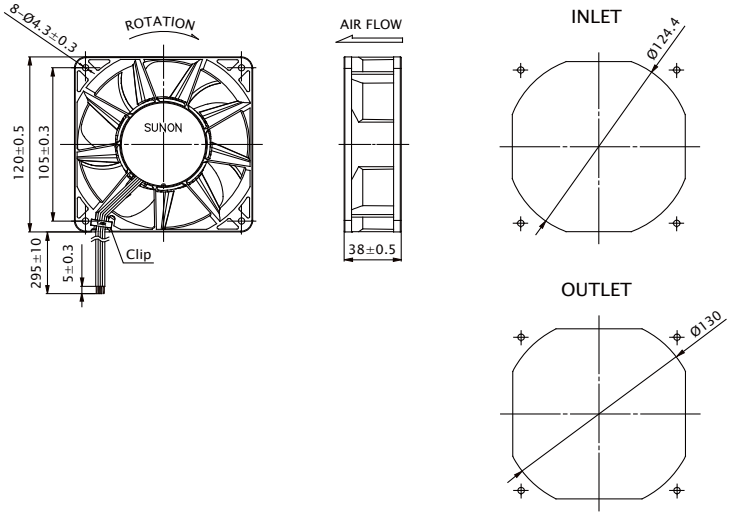

※ All model can be customized. Please contact Sunon Sales.

※ Specifications are subject to change without notice. Please Visit SUNON website at www.sunon.com for update information.

120x120x38 mm

170.0~190.0 CFM

Specification

Model	Bearing	Rated Voltage	Power Current	Power Consumption	Speed	Airflow	Static Pressure	Noise	Weight	Curve
	◉ 2BALL ○ Sleeve	(VDC)	(mA)	(WATTS)	(RPM)	(CFM)	(inch-H_2O)	(dB(A))	(g)	
PMD1212PMB1-A (2).GN	◉	12	1600	19.2	4200	190.0	0.65	54.0	330.0	1
PMD1212PMB2-A (2).GN	◉	12	1200	14.4	3800	170.0	0.54	51.0	330.0	2
PMD2412PMB1-A (2).GN	◉	24	760	18.2	4200	190.0	0.65	54.0	330.0	1
PMD2412PMB2-A (2).GN	◉	24	570	13.7	3800	170.0	0.54	51.0	330.0	2

Function R Type : (2).R.GN ／ F Type : (2).F.GN

Air Flow-Static Pressure Characteristics

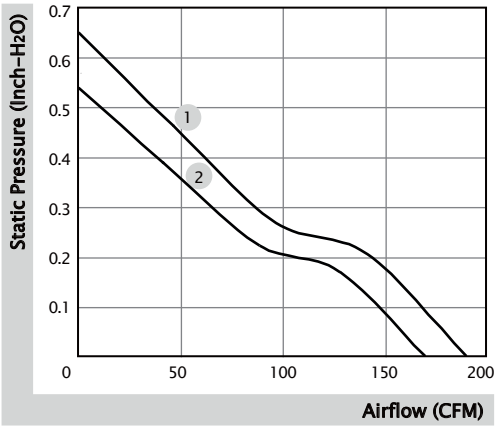

External Dimensions(mm)

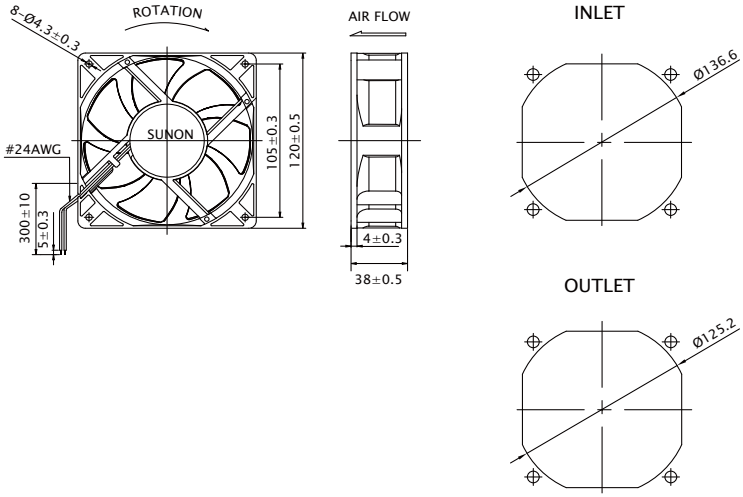

※ All model can be customized. Please contact Sunon Sales.

※ Specifications are subject to change without notice. Please Visit SUNON website at www.sunon.com for update information.

120x120x38 mm

93.0~138.0 CFM

Specification

MAGLev by SUNON	Bearing	Rated Voltage	Power Current	Power Consumption	Speed	Airflow	Static Pressure	Noise	Weight	Curve
	● VAPO	(VDC)	(mA)	(WATTS)	(RPM)	(CFM)	(inch-H_2O)	(dB(A))	(g)	
MEC0381V1-000U-A99	●	12	833	10.0	3100	138.0	0.36	48.0	218.0	1
MEC0381V2-000U-A99	●	12	421	5.1	2600	116.0	0.26	44.0	218.0	2
MEC0381V3-000U-A99	●	12	241	2.9	2100	93.0	0.18	37.0	218.0	3
MEC0382V1-000U-A99	●	24	383	9.2	3100	138.0	0.36	48.0	218.0	1
MEC0382V2-000U-A99	●	24	224	5.4	2600	116.0	0.26	44.0	218.0	2
MEC0382V3-000U-A99	●	24	130	3.1	2100	93.0	0.18	37.0	218.0	3
Model	2BALL / Sleeve	(VDC)	(mA)	(WATTS)	(RPM)	(CFM)	(inch-H_2O)	(dB(A))	(g)	
EEC0381B1-000U-A99		12	833	10.0	3100	138.0	0.36	48.0	214.0	1
EEC0381B2-000U-A99		12	421	5.1	2600	116.0	0.26	44.0	214.0	2
EEC0381B3-000U-A99		12	241	2.9	2100	93.0	0.18	37.0	214.0	3
EEC0382B1-000U-A99		24	383	9.2	3100	138.0	0.36	48.0	214.0	1
EEC0382B2-000U-A99		24	224	5.4	2600	116.0	0.26	44.0	214.0	2
EEC0382B3-000U-A99		24	130	3.1	2100	93.0	0.18	37.0	214.0	3
EEC0384B1-000U-A99		48	203	9.7	3100	138.0	0.36	48.0	214.0	1
EEC0384B2-000U-A99		48	120	5.8	2600	116.0	0.26	44.0	214.0	2
EEC0384B3-000U-A99		48	69	3.3	2100	93.0	0.18	37.0	214.0	3

Function R Type : F99 ／ F Type : G99

Air Flow-Static Pressure Characteristics

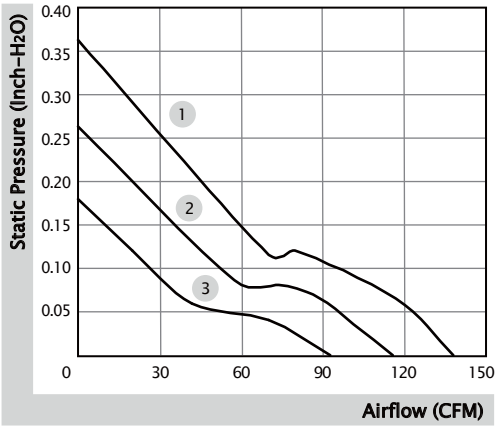

External Dimensions(mm)

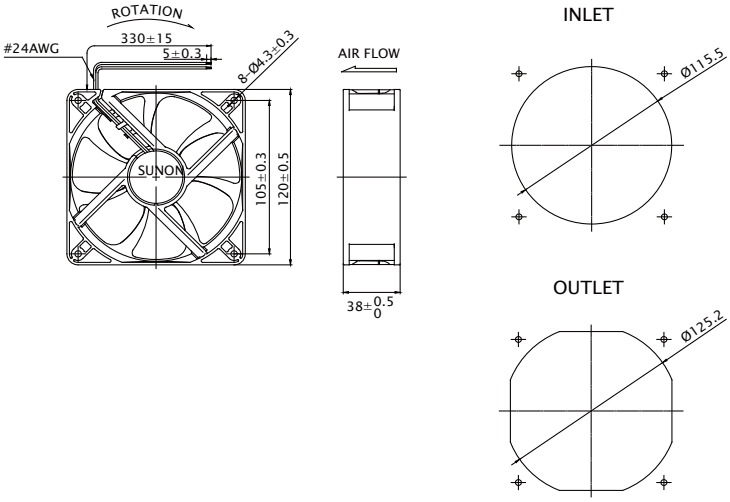

※ All model can be customized. Please contact Sunon Sales.

※ Specifications are subject to change without notice. Please Visit SUNON website at www.sunon.com for update information.

120x120x38 mm

93.0~138.0 CFM

Specification

Model	Bearing	Rated Voltage	Power Current	Power Consumption	Speed	Airflow	Static Pressure	Noise	Weight	Curve
	◉ 2BALL ○ Sleeve	(VDC)	(mA)	(WATTS)	(RPM)	(CFM)	(inch-H_2O)	(dB(A))	(g)	
EFC0382B1-1000U-A9H	◉	24	195	4.68	3700	138.0	0.40	48.0	248.0	1
EFC0382B2-1000U-A9H	◉	24	135	3.24	3100	116.0	0.29	43.2	248.0	2
EFC0382B3-1000U-A9H	◉	24	75	1.80	2400	93.0	0.19	36.0	248.0	3

Function

R Type : F9H ／ F Type : G9H ／ PWM : H9H, Q9H, S9H

Air Flow-Static Pressure Characteristics

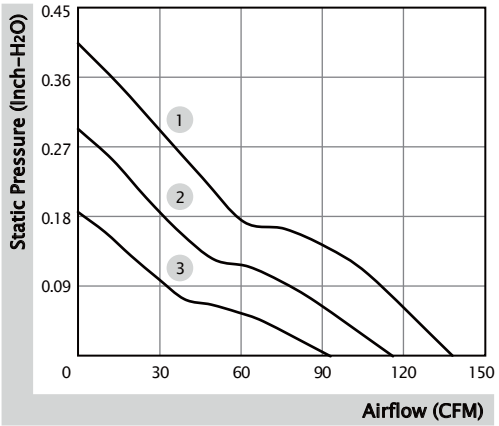

External Dimensions(mm)

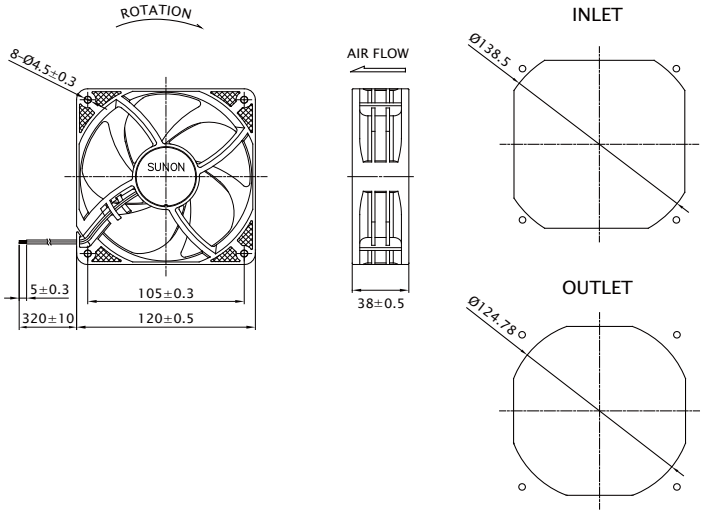

※ All model can be customized. Please contact Sunon Sales.

※ Specifications are subject to change without notice. Please Visit SUNON website at www.sunon.com for update information.

140x140x38 mm

238.5~297.9 CFM

Specification

Model	Bearing	Rated Voltage	Power Current	Power Consumption	Speed	Airflow	Static Pressure	Noise	Weight	Curve
	◉ 2BALL ○ Sleeve	(VDC)	(mA)	(WATTS)	(RPM)	(CFM)	(inch-H_2O)	(dB(A))	(g)	
PFE0381BX-000U-A99	◉	12	3300	39.60	6800	297.9	2.05	68.3	472.0	1
PFE0381B1-000U-A99	◉	12	1720	20.64	5500	238.5	1.20	62.0	472.0	2

Function

R Type : F99 ／ F Type : G99 ／ PWM : H99, Q99, S99

Air Flow-Static Pressure Characteristics

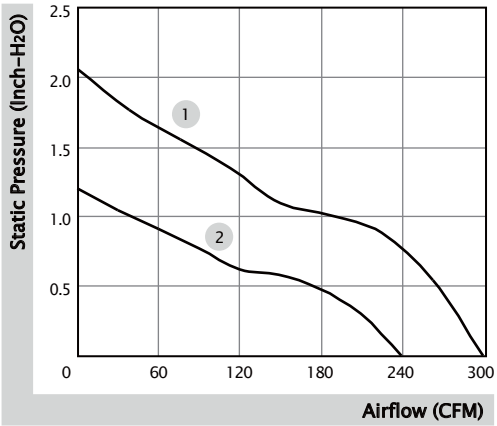

External Dimensions(mm)

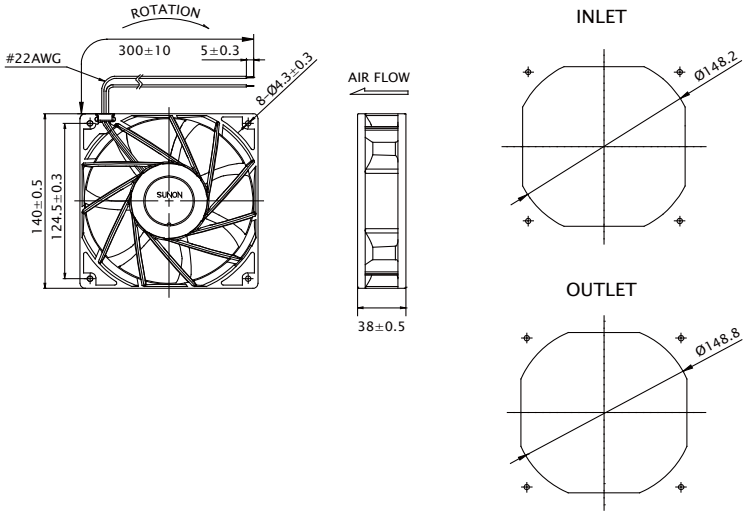

※ All model can be customized. Please contact Sunon Sales.

※ Specifications are subject to change without notice. Please Visit SUNON website at www.sunon.com for update information.

140x140x38 mm

282.6 CFM

Specification

Model	Bearing	Rated Voltage	Power Current	Power Consumption	Speed	Airflow	Static Pressure	Noise	Weight	Curve
	⊕ 2BALL ○ Sleeve	(VDC)	(mA)	(WATTS)	(RPM)	(CFM)	(inch-H_2O)	(dB(A))	(g)	
PFE0384BX-000U-A99	⊕	48	740	35.52	6600	282.6	1.88	65.9	560.0	1

Function

R Type : F99 ／ F Type : G99 ／ PWM : H99, Q99, S99

Air Flow-Static Pressure Characteristics

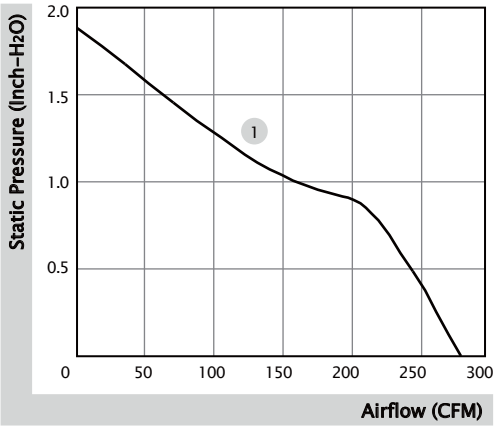

External Dimensions(mm)

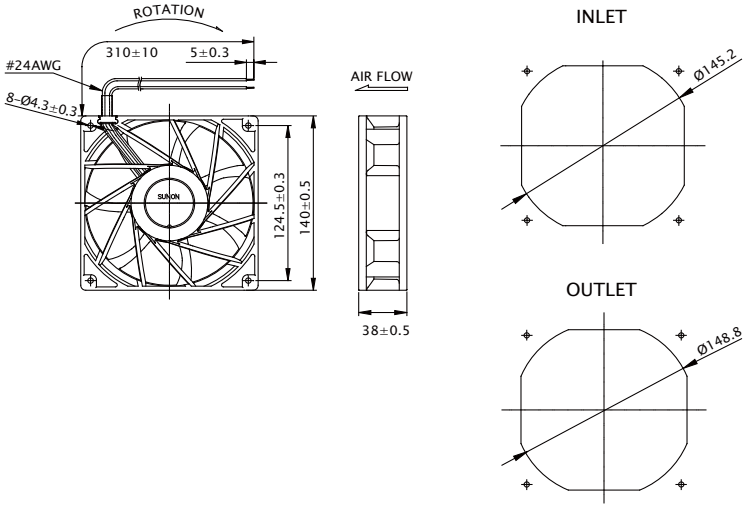

※ All model can be customized. Please contact Sunon Sales.

※ Specifications are subject to change without notice. Please Visit SUNON website at www.sunon.com for update information.

140x140x51 mm

250.3 CFM

Specification

Model	Bearing	Rated Voltage	Power Current	Power Consumption	Speed	Airflow	Static Pressure	Noise	Weight	Curve
	⊕ 2BALL ○ Sleeve	(VDC)	(mA)	(WATTS)	(RPM)	(CFM)	(inch-H_2O)	(dB(A))	(g)	
PFE0514B1-000U-A99	⊕	48	470	22.56	5000	250.3	1.43	61.4	635.0	1

Function

R Type : F99 ／ F Type : G99 ／ PWM : H99, Q99, S99

Air Flow-Static Pressure Characteristics

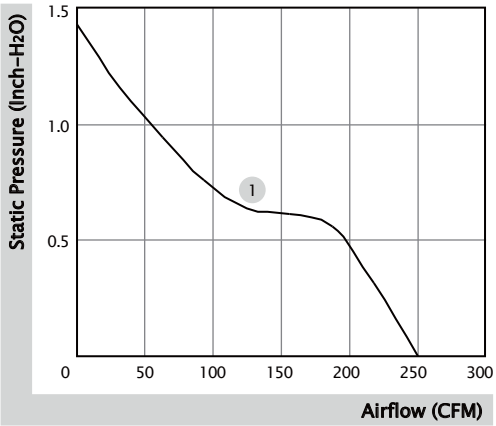

External Dimensions(mm)

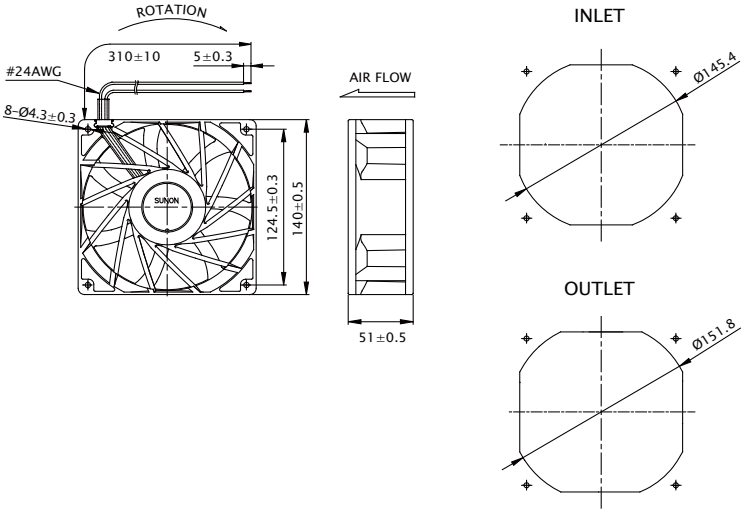

※ All model can be customized. Please contact Sunon Sales.

※ Specifications are subject to change without notice. Please Visit SUNON website at www.sunon.com for update information.

Notes

DC Blower New Model Numbering System

M F 50 15 1 V 1 – 1 B 00U – A99

Function Code
- 999: Standard Model
- A99: AutoRestart
- C99: F type (3rd wire)
- F99: AutoRestart and R type(3rd wire)
- G99: AutoRestart and F type(3rd wire)
- H99: AutoRestart with PWM
- Q99: AutoRestart , R type with PWM
- S99: AutoRestart , F type with PWM

Customer Code → by Customer

Product Code → B : Blower

Generation Code → Blank: None 1: Gen1

Speed → X: Super High; 1: High 2: Medium 3: Low 4: Super Low

Bearing → V: Vapo B: 2 Ball S: Sleeve

Voltage → 0: 5VDC 1: 12VDC 2: 24VDC 4: 48VDC

Fan Thickness

Frame Size

Code	Size(mm)	Code	Size(mm)	Code	Size(mm)	Code	Size(mm)
01~09	01~09	A0~A9	100~109	K0~K9	200~209	V0~V9	300~309
10~19	10~19	B0~B9	110~119	L0~L9	210~219	W0~W9	310~319
20~29	20~29	C0~C9	120~129	M0~M9	220~229	X0~X9	320~329
30~39	30~39	D0~D9	130~139	N0~N9	230~239	Y0~Y9	330~339
40~49	40~49	E0~E9	140~149	P0~P9	240~249	Z0~Z9	340~349
50~59	50~59	F0~F9	150~159	Q0~Q9	250~259		
60~69	60~69	G0~G9	160~169	R0~R9	260~269		
70~79	70~79	H0~H9	170~179	S0~S9	270~279		
80~89	80~89	I0~I9	180~189	T0~T9	280~289		
90~99	90~99	J0~J0	190~199	U0~U9	290~299		

Motor Type

Series Code → M Series E Series A Series P Series

Certification

QC 080000 IECQ HSPM

Safety

※ Note: For critical or extreme environments, including non stop operation, please contact SUNON and we will gladly provide assistance with your product selection to ensure an appropriate cooling product for your application.

※ Note: The "Life Expectancy" of the fan has not been evaluated for use in combination with any end application. Therefore, the Life Expectancy Test Reports(L10 and MTTF Report) that relate to the fan are only for reference.

DC Blower Old Model Numbering System

PMB 12 97 P Y B 1 – AY P/N

- AY → Auto Restart
- 1 → Speed: X: Super; 1: High; 2: Middle; 3: Low; 4: Extra Low
- B → Bearing System: V: Vapo; B: Ball
- Y → Frame Thickness: E: 6mm; D: 8mm; F: 10mm; G: 12mm; H: 15mm; K: 20mm; B: 24mm; T: 25mm; Q: 28mm; N: 30mm; L: 32mm; Y: 33mm; I: 35mm; M: 38mm; O: 40mm; P: 56mm; W: 60mm
- P → Frame Material: P: PBT Plastic; A: Aluminum
- 97 → Frame Size: 17:17mm; 01:20mm; 02:25mm; 03:30mm; 35:35mm; 38:38mm; 04:40mm; 45:45mm; 05:50mm; 55:55mm; 06:60mm; 07:70mm; 75:75mm; 08:80mm; 09:92mm; 97:97mm; 12:120mm
- 12 → Voltage: 05:5VDC; 24:24VDC; 12:12VDC; 48:48VDC
- PMB → Fan Series: GB Series; PMB Series

P/N

Example : PMB1297PYB1-AY P/N:(2).GN

- (2) Two ball bearing
- GN RoHS compliance

Certification

QC 080000 IECQ HSPM

Safety

※ Note: For critical or extreme environments, including non stop operation, please contact SUNON and we will gladly provide assistance with your product selection to ensure an appropriate cooling product for your application.

※ Note: The "Life Expectancy" of the fan has not been evaluated for use in combination with any end application. Therefore, the Life Expectancy Test Reports(L10 and MTTF Report) that relate to the fan are only for reference.

50x50x15 mm

2.7~5.4 CFM

Specification

Model	Bearing	Rated Voltage	Power Current	Power Consumption	Speed	Airflow	Static Pressure	Noise	Weight	Curve
	2BALL / Sleeve	(VDC)	(mA)	(WATTS)	(RPM)	(CFM)	(inch-H_2O)	(dB(A))	(g)	
MF50151VX-1B00U-A99	●	12	155	1.86	6200	5.4	0.97	42.2	30.0	1
MF50151V1-1B00U-A99	●	12	95	1.14	5200	4.5	0.67	39.6	30.0	2
MF50151V2-1B00U-A99	●	12	45	0.54	4200	3.5	0.40	32.6	30.0	3
MF50151V3-1B00U-A99	●	12	30	0.36	3200	2.7	0.18	23.2	30.0	4

Function R Type : F99 ／ F Type : G99

Air Flow-Static Pressure Characteristics

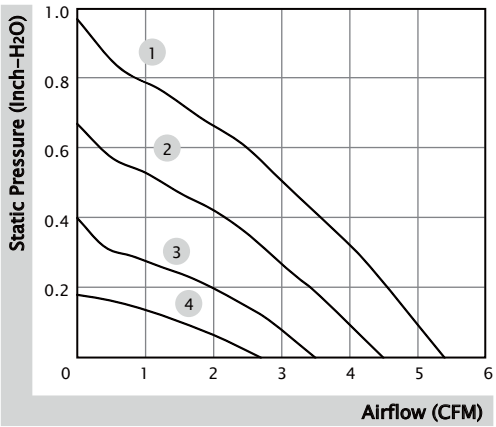

External dimensions(mm)

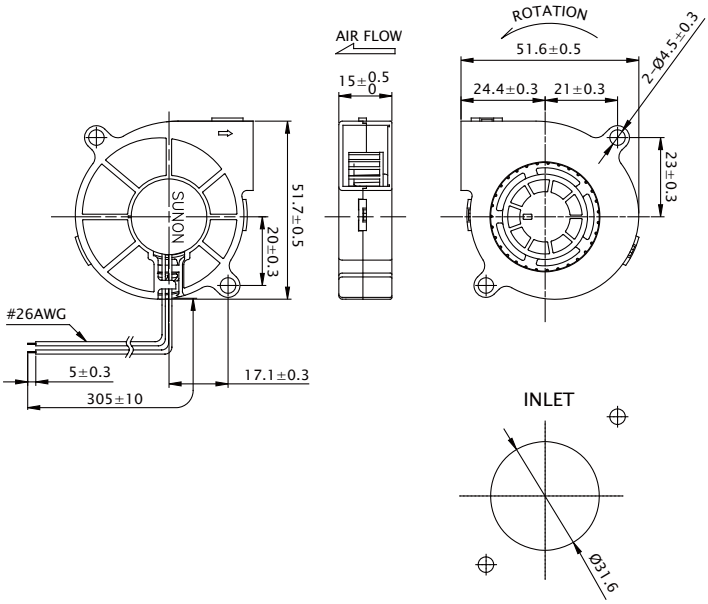

※ All model can be customized. Please contact Sunon Sales.

※ Specifications are subject to change without notice. Please Visit SUNON website at www.sunon.com for update information.

50x50x15 mm

2.6~5.4 CFM

Specification

Model	Bearing	Rated Voltage	Power Current	Power Consumption	Speed	Airflow	Static Pressure	Noise	Weight	Curve
	◉ 2BALL ○ Sleeve	(VDC)	(mA)	(WATTS)	(RPM)	(CFM)	(inch-H_2O)	(dB(A))	(g)	
EF50151BX-1B00U-A99	◉	12	150	1.80	6200	5.4	0.97	45.8	31.0	1
EF50151B1-1B00U-A99	◉	12	106	1.28	5200	4.5	0.67	41.0	31.0	2
EF50151B2-1B00U-A99	◉	12	54	0.65	4200	3.5	0.40	34.0	31.0	3
EF50151B3-1B00U-A99	◉	12	36	0.44	3200	2.6	0.18	26.0	31.0	4

Function R Type : F99 ／ F Type : G99

Air Flow-Static Pressure Characteristics

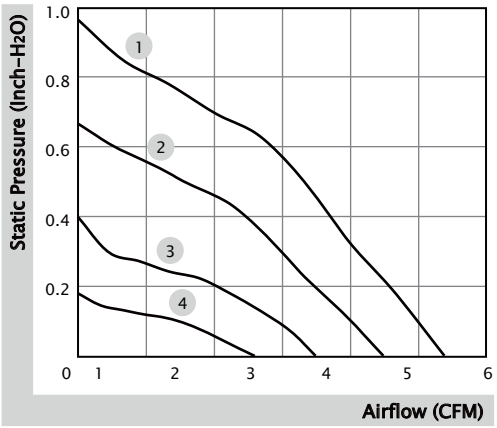

External dimensions(mm)

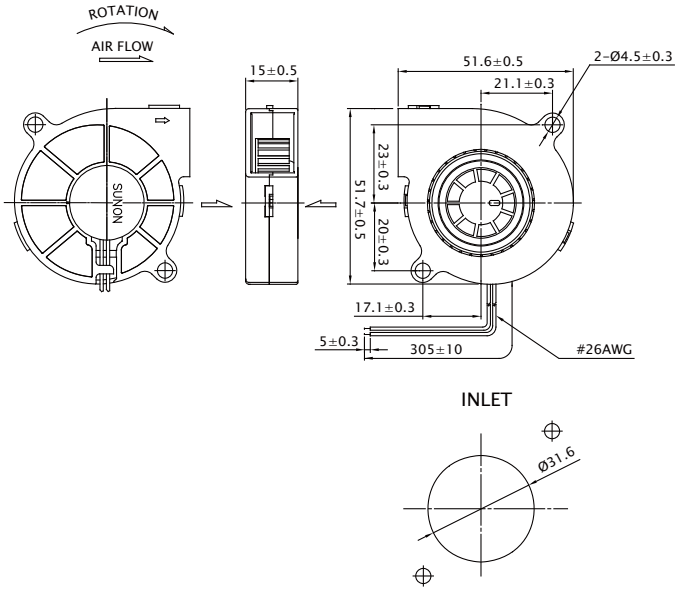

※ All model can be customized. Please contact Sunon Sales.

※ Specifications are subject to change without notice. Please Visit SUNON website at www.sunon.com for update information.

50x50x20 mm

4.8~5.8 CFM

Specification

MAGLev by SUNON	Bearing	Rated Voltage	Power Current	Power Consumption	Speed	Airflow	Static Pressure	Noise	Weight	Curve
	● VAPO	(VDC)	(mA)	(WATTS)	(RPM)	(CFM)	(inch-H_2O)	(dB(A))	(g)	
MF50201V1-1B00U-A99	●	12	124	1.49	5300	5.8	0.66	34.8	34.0	1
MF50201V2-1B00U-A99	●	12	100	1.20	4650	5.1	0.46	30.0	34.0	2
MF50201V3-1B00U-A99	●	12	75	0.90	4350	4.8	0.35	27.5	34.0	3

Function R Type : F99 ／ F Type : G99

Air Flow-Static Pressure Characteristics

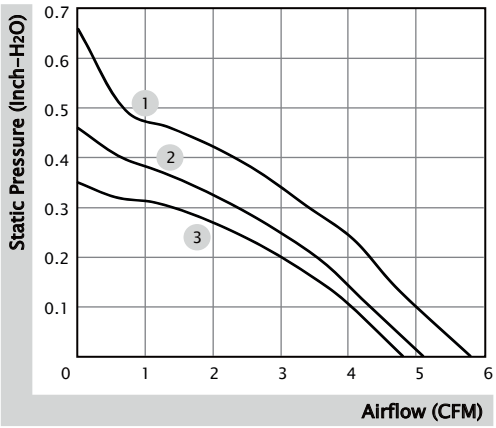

External dimensions(mm)

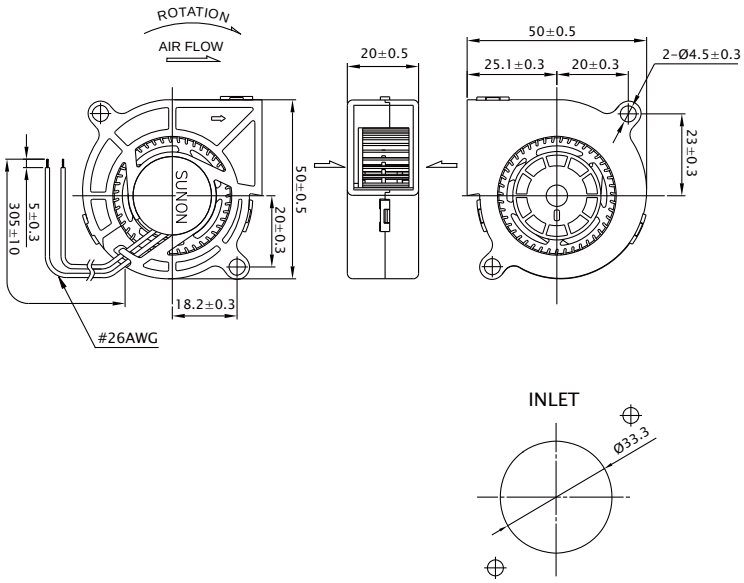

※ All model can be customized. Please contact Sunon Sales.

※ Specifications are subject to change without notice. Please Visit SUNON website at www.sunon.com for update information.

60x60x15 mm

5.1~6.2 CFM

Specification

MAGLev by SUNON	Bearing	Rated Voltage	Power Current	Power Consumption	Speed	Airflow	Static Pressure	Noise	Weight	Curve
	● VAPO	(VDC)	(mA)	(WATTS)	(RPM)	(CFM)	(inch-H_2O)	(dB(A))	(g)	
MF60151VX-1B00U-A99	●	12	130	1.56	4500	6.2	0.71	37.7	36.0	1
MF60151V1-1B00U-A99	●	12	75	0.90	4000	5.7	0.46	32.8	36.0	2
MF60151V2-1B00U-A99	●	12	55	0.66	3600	5.1	0.33	29.0	36.0	3

Function R Type : F99 ／ F Type : G99

Air Flow-Static Pressure Characteristics

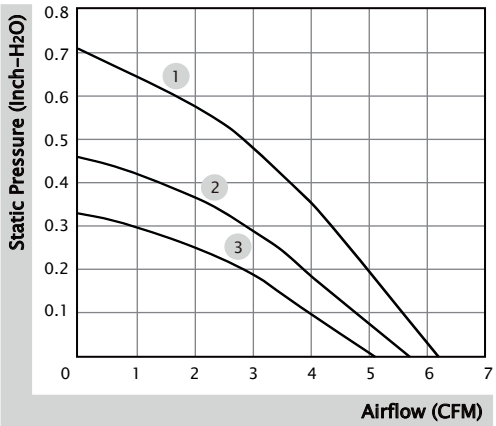

External dimensions(mm)

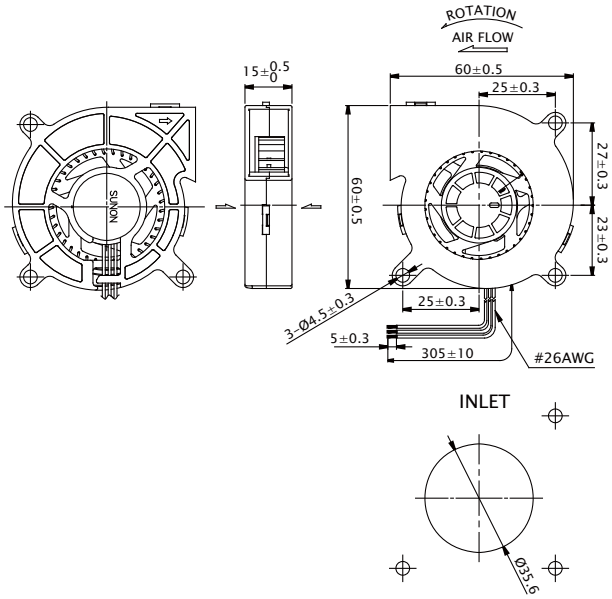

※ All model can be customized. Please contact Sunon Sales.

※ Specifications are subject to change without notice. Please Visit SUNON website at www.sunon.com for update information.

75x75x30 mm

10.8~15.5 CFM

Specification

Model	Bearing	Rated Voltage	Power Current	Power Consumption	Speed	Airflow	Static Pressure	Noise	Weight	Curve
	◉ 2BALL ○ Sleeve	(VDC)	(mA)	(WATTS)	(RPM)	(CFM)	(inch-H_2O)	(dB(A))	(g)	
PF75301B1-1B00U-A99	◉	12	200	2.40	3400	15.5	0.57	42.0	85.0	1
PF75301B2-1B00U-A99	◉	12	142	1.71	3000	13.8	0.43	38.6	85.0	2
PF75301B3-1B00U-A99	◉	12	82	0.99	2400	10.8	0.24	32.9	85.0	3
PF75302B1-1B00U-A99	◉	24	115	2.76	3400	15.5	0.57	42.0	88.0	1
PF75302B2-1B00U-A99	◉	24	80	1.92	3000	13.8	0.43	38.6	88.0	2
PF75302B3-1B00U-A99	◉	24	47	1.13	2400	10.8	0.24	32.9	88.0	3

Function

R Type : F99 ／ F Type : G99 ／ PWM : H99, Q99, S99

Air Flow-Static Pressure Characteristics

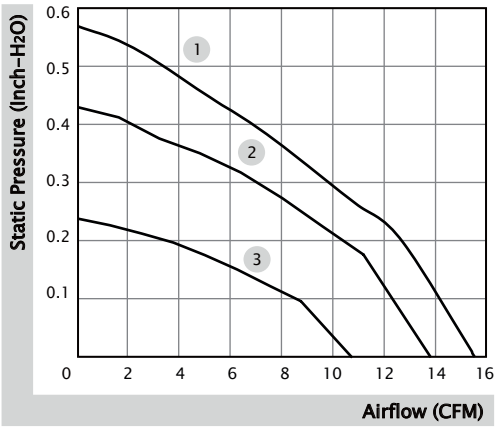

External dimensions(mm)

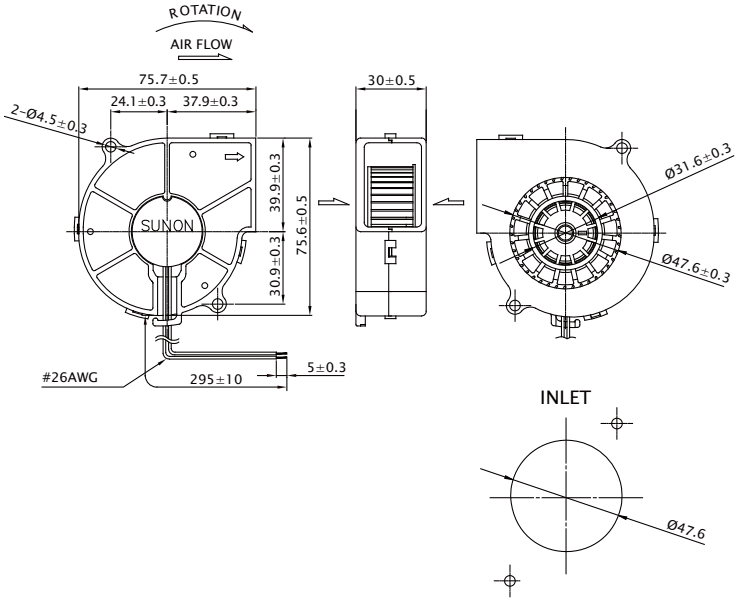

※ All model can be customized. Please contact Sunon Sales.

※ Specifications are subject to change without notice. Please Visit SUNON website at www.sunon.com for update information.

97x94x33 mm

22.4~30.5 CFM

Specification

Model	Bearing	Rated Voltage	Power Current	Power Consumption	Speed	Airflow	Static Pressure	Noise	Weight	Curve
	◉ 2BALL ○ Sleeve	(VDC)	(mA)	(WATTS)	(RPM)	(CFM)	(inch-H_2O)	(dB(A))	(g)	
PMB1297PYB1-AY (2).GN	◉	12	600	7.20	3600	30.5	0.92	55.8	185.00	1
PMB1297PYB2-AY (2).GN	◉	12	440	5.28	3200	26.6	0.65	53.1	185.00	2
PMB1297PYB3-AY (2).GN	◉	12	300	3.60	2700	22.4	0.43	50.0	185.00	3

Function

R Type : (2).R.GN ／ F Type : (2).F.GN

Air Flow-Static Pressure Characteristics

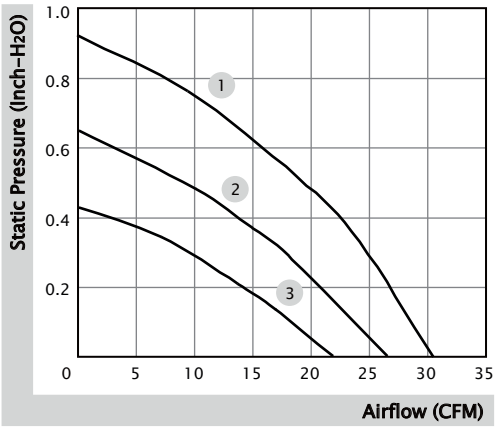

External dimensions(mm)

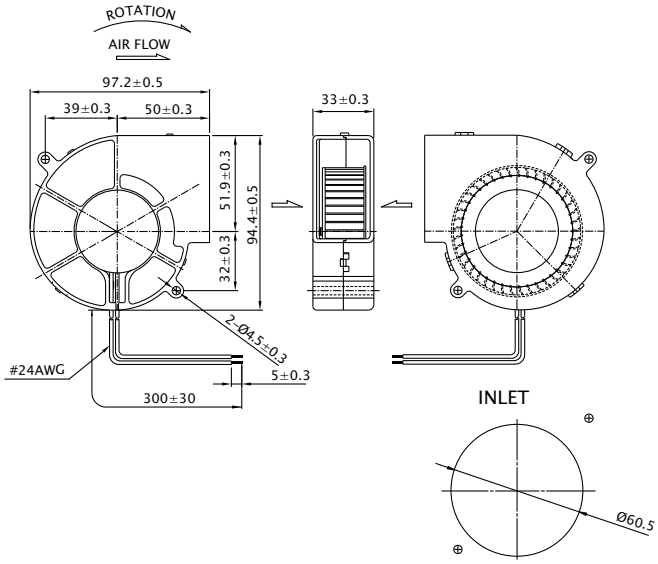

※ All model can be customized. Please contact Sunon Sales.

※ Specifications are subject to change without notice. Please Visit SUNON website at www.sunon.com for update information.

97x95x33 mm

44.2~54.7 CFM

Specification

Model	Bearing	Rated Voltage	Power Current	Power Consumption	Speed	Airflow	Static Pressure	Noise	Weight	Curve
	◉ 2BALL ○ Sleeve	(VDC)	(mA)	(WATTS)	(RPM)	(CFM)	(inch-H_2O)	(dB(A))	(g)	
PF97331BX-B00U-A99	◉	12	3500	42.00	6800	54.7	5.22	63.2	184.0	1
PF97331B1-B00U-A99	◉	12	1600	19.20	5400	44.2	3.39	58.0	184.0	2

Function

R Type : F99 ／ F Type : G99 ／ PWM : H99, Q99, S99

Air Flow-Static Pressure Characteristics

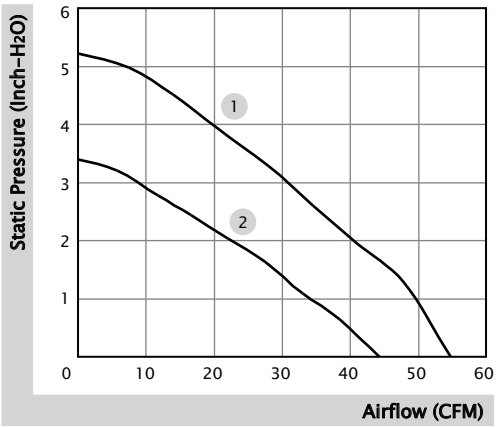

External dimensions(mm)

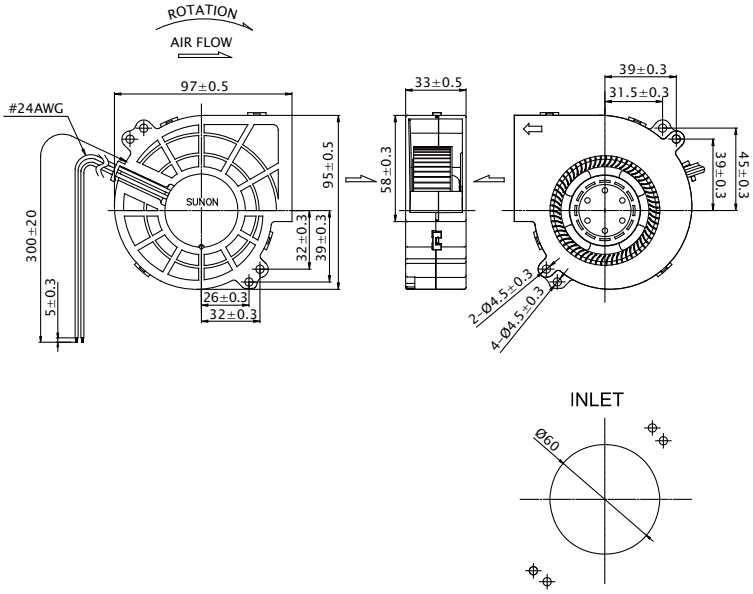

※ All model can be customized. Please contact Sunon Sales.

※ Specifications are subject to change without notice. Please Visit SUNON website at www.sunon.com for update information.

100x100x25 mm

for Automative Application | Meets AEC-Q100

18.4 CFM

Specification

Model	Bearing	Rated Voltage	Power Current	Power Consumption	Speed	Airflow	Static Pressure	Noise	Weight	Curve
	⊕ 2BALL ○ Sleeve	(VDC)	(mA)	(WATTS)	(RPM)	(CFM)	(inch-H_2O)	(dB(A))	(g)	
AFA0251B1-1B00U-H99	⊕	13.5	520	7.02	3800	18.4	0.86	52.3	110	1

Function PWM : S99

Air Flow-Static Pressure Characteristics

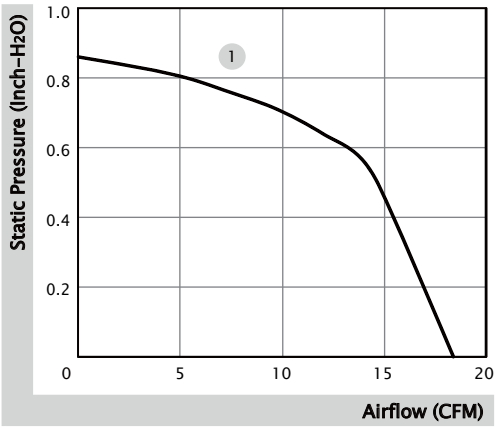

External dimensions(mm)

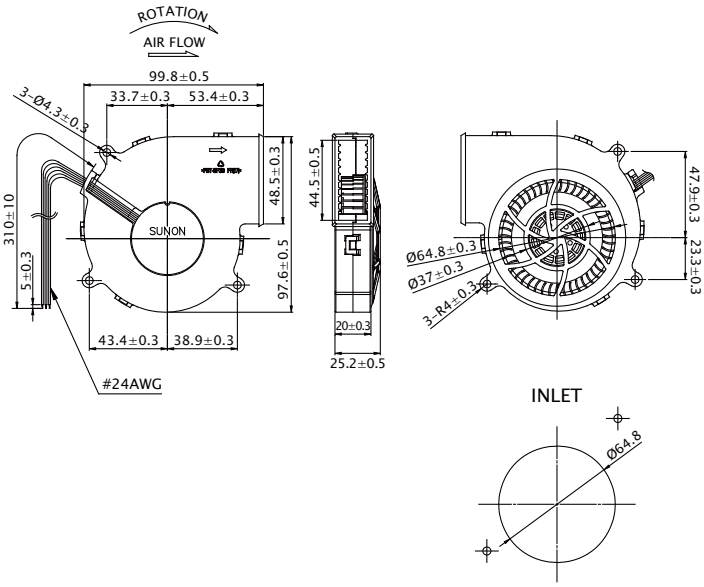

※ All model can be customized. Please contact Sunon Sales.

※ Specifications are subject to change without notice. Please Visit SUNON website at www.sunon.com for update information.

120x120x32 mm

31.4~35.9 CFM

Specification

Model	Bearing	Rated Voltage	Power Current	Power Consumption	Speed	Airflow	Static Pressure	Noise	Weight	Curve
	◉ 2BALL ○ Sleeve	(VDC)	(mA)	(WATTS)	(RPM)	(CFM)	(inch-H_2O)	(dB(A))	(g)	
PMB1212PLB2-A (2).GN	◉	12	820	9.8	2500	35.9	0.89	53.8	250.0	1
PMB1212PLB3-A (2).GN	◉	12	450	5.4	2100	31.4	0.64	49.6	250.0	2

Function R Type : (2).R.GN ／ F Type : (2).F.GN

Air Flow-Static Pressure Characteristics

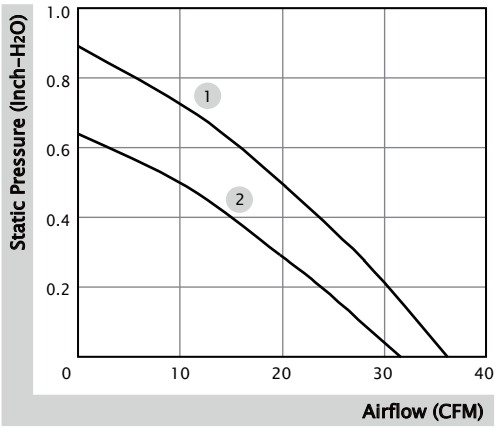

External dimensions(mm)

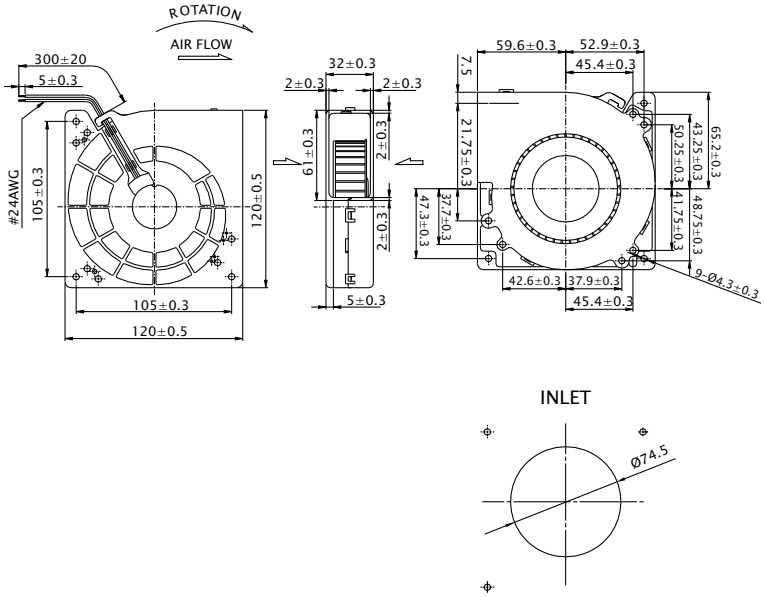

※ All model can be customized. Please contact Sunon Sales.

※ Specifications are subject to change without notice. Please Visit SUNON website at www.sunon.com for update information.

Notes

Notes

Notes

www.sunon.com

SUNON®

Headquarters
Sunonwealth Electric Machine Industry Co., Ltd.

TEL : +886-7-8135888
E-mail : sunon@sunon.com

Sunon Inc. (U.S.A.)

TEL : +1-714-255-0208
E-mail : info@sunon.com

Sunon SAS (Europe)

E-mail : europe@sunon.com

Sunon India

E-mail : sunon@sunon.com

2025/05/10 (255-E)

© 2025 SUNONWEALTH Electric Machine Industry Co., Ltd.