TEST JACKS, TEST PROBES

Ø 2 mm

PCB mounting

Flux-proof terninals

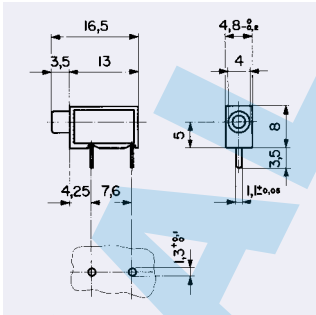

Contact system	
Rated current	6,3 A
Contact resistance at 20 mV	<10 mΩ
Insulation resistance, 1 min. contact to contact	> 10^4 MΩ
Contact/mounting plate	> 10^4 MΩ
Dielectric strength, 50 Hz, 1 min. contact to contact	> 2 kV
Contact/mounting plate	> 2 kV
Temperature at no current	–25 °C up to +100 °C
at rated current	–25 °C up to +70 °C
Solderability	2 sec., 235 °C IEC 68-2-20 test Ta, test method 1
Resistance to soldering heat	5 sec., 260 °C IEC 68-2-20 test Tb, test method 1 A
Surface of contacts (average thickness)	2,5 µm Au

Tin-plated contacts on request

Type	PBD	
Order No. Color	0040.1211	black
	0040.1212	red
	~~0040.1213~~	~~green~~
	~~0040.1214~~	~~blue~~
	~~0040.1215~~	~~yellow~~

PARTIAL PHASE-OUT
concerned part numbers are crossed out