samtec

QSTRIP®

**(0,50mm) .0197"**

**QTH SERIES**

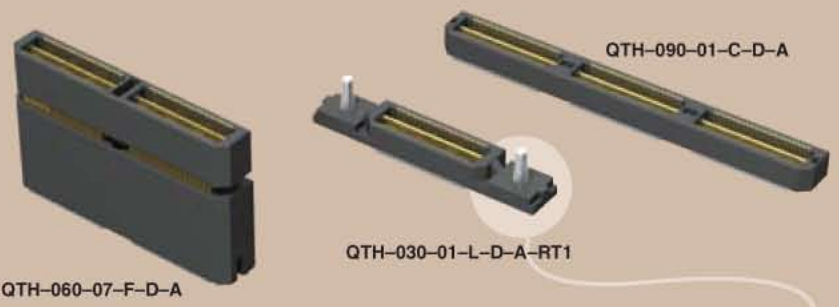


# HIGH SPEED GROUND PLANE HEADER

## SPECIFICATIONS

For complete specifications and recommended PCB layouts see www.samtec.com?QTH

**Insulator Material:**
Liquid Crystal Polymer

FILE NO. E111594

**Terminal Material:**
Phosphor Bronze

**Plating:**
Au or Sn over 50µ" (1,27µm) Ni

**Current Rating:**
Contact: 1.0A @ 30°C Temperature Rise
Ground Plane: 7.8A @ 30°C Temperature Rise

**Operating Temp Range:**
-55°C to +125°C

**Voltage Rating:**
125 VAC (5mm Stack Height)

**Max Cycles:**
100

**Unmating Force (-RT1 option):**
-RT1 option increases unmating force up to 50%

**RoHS Compliant:**
Yes

### Processing:

**Lead–Free Solderable:**
Yes

**SMT Lead Coplanarity:**
(0,10mm) .004" max (030-060)
(0,15mm) .006" max (090-120)

**Board Stacking:**
For applications requiring more than two connectors per board or 4 banks or more, contact ipg@samtec.com

## APPLICATION SPECIFIC OPTION

- 14mm, 15mm, 22mm and 30mm stack height (Caution: Some automatic placement/inspection machines may have component height restrictions. Please consult machinery specifications.)
- 30µ" (0,76µm) Gold (Specify -H plating for Data Rate cable mating applications.)
- Edge Mount & Guide Posts
- 150 positions per row

Call Samtec.

***Note:** –C Plating passes 10 year MFG testing

**Note:** Some lengths, styles and options are non-standard, non-returnable.

**Board Mates:**
QSH

**Cable Mates:**
HFHM2, HQCD, HQDP
(See Application Specific note)

E.L.P.™ EXTENDED LIFE PRODUCT
10 year Mixed Flowing Gas with 50µ" Gold
Call Samtec for maximum cycles mated with QSH

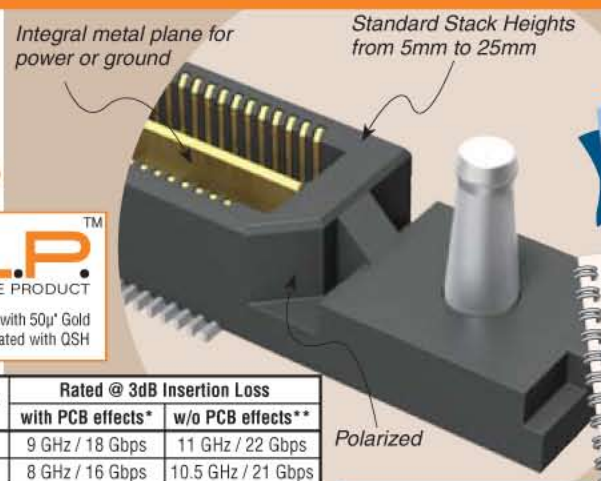


Final Inch® Break Out Region Performance Certified finalinch.com

**Protocols Supported**
Hypertransport™
XAUI
PCI Express®
SATA
InfiniBand™
Download app notes at www.samtec.com/appnote
Contact SIG @ samtec.com for questions on protocols

| QTH/QSH 5mm Stack Height | Type | Rated @ 3dB Insertion Loss | |
|---|---|---|---|
| | | with PCB effects* | w/o PCB effects** |
| Single-Ended Signaling | –D | 9 GHz / 18 Gbps | 11 GHz / 22 Gbps |
| Differential Pair Signaling | –D | 8 GHz / 16 Gbps | 10.5 GHz / 21 Gbps |
| Differential Pair Signaling | –DP | 9.5 GHz / 19 Gbps | —— |

*Performance data includes effects of a non-optimized PCB.
**Test board losses de-embedded from performance data.

Performance data for other stack heights and complete test data available at www.samtec.com?QTH or contact sig@samtec.com

**ALSO AVAILABLE**
Board Spacing Standoffs. See SO Series.

**QTH – PINS PER ROW NO. OF PAIRS – LEAD STYLE – PLATING OPTION – TYPE – A – OTHER OPTION**

**–030, –060, –090, –120**
(60 total pins per bank = –D)

**–020, –040, –060, –080**
(20 pairs per bank = –D–DP)

**Specify LEAD STYLE from chart**

**–F**
= Gold Flash on Signal Pins and Ground Plane, Matte Tin on tails

**–L**
= 10µ" (0,25µm) Gold on Signal Pins and Ground Plane, Matte Tin on tails

**–C***
= Electro-Polished Selective 50µ" (1,27µm) min Au over 150µ" (3,81µm) Ni on Signal Pins in contact area, 10µ" (0,25µm) min Au over 50µ" (1,27µm) Ni on Ground Plane in contact area, Matte Tin over 50µ" (1,27µm) min Ni on all solder tails

**–D**
= Single-Ended

**–D–DP**
= Differential Pair (–01 only)

**–K**
= (7,00mm) .275" DIA Polyimide film Pick & Place Pad (N/A with -05 & -07 lead style)

**–TR**
= Tape & Reel (–090 positions maximum)

**–RT1**
= Retention Option (–01 lead style only & –090 positions maximum)

**–L**
= Latching Option (–01 lead style only) (N/A on –060 (–D–DP), –080, –090 & –120 or –RT1 option)

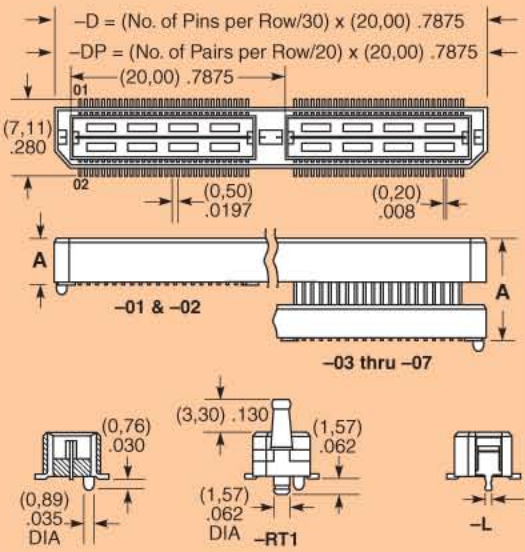


| QTH LEAD STYLE | A | HEIGHT WITH QSH* |
|---|---|---|
| –01 | (4,27) .168 | (5,00) .197 |
| –02 | (7,26) .286 | (8,00) .315 |
| –03 | (10,27) .404 | (11,00) .433 |
| –04 | (15,25) .600 | (16,00) .630 |
| –05 | (18,26) .718 | (19,00) .748 |
| –07 | (24,24) .954 | (25,00) .984 |

*Processing conditions will affect mated height.

*Due to technical progress, all designs, specifications and components are subject to change without notice.*



**SAMTEC USA** • Tel: 1-800-SAMTEC-9 or 812-944-6733 **SAMTEC NORTHERN CALIFORNIA** • Tel: 408-395-5900 **SAMTEC SOUTHERN CALIFORNIA** • Tel: 1-800-726-8329
**SAMTEC AMERICA LATINA COMERCIO EXTERIOR LTDA** • Tel: (+55 31) 3786 3227 **SAMTEC UNITED KINGDOM** • Tel: 44 01236 739292 **SAMTEC GERMANY** • Tel: +49 (0) 89 / 89460-0
**SAMTEC FRANCE** • Tel: 33 01 60 95 06 60 **SAMTEC ITALY** • Tel: 39 039 6890337 **SAMTEC NORDIC/BALTIC** • Tel: +46-84477280 **SAMTEC BENELUX** • Tel: 44 01236 739292
**SAMTEC ISRAEL** • Tel: 972-3-7526600 **SAMTEC INDIA** • Tel: +91-80-3272 1612 **SAMTEC ASIA PACIFIC** • Tel: 65 6745-5955 **SAMTEC JAPAN** • Tel: 045-475-1385 **SAMTEC CHINA** • Tel: 86-21-6083 3766
**SAMTEC TAIWAN** • Tel: 886-2-2735-6109 **SAMTEC HONG KONG** • Tel: 852-26904858 **SAMTEC KOREA** • Tel: 82-31-717-5685 **SAMTEC ANZ** • Tel: 613 9580 0683