samtec

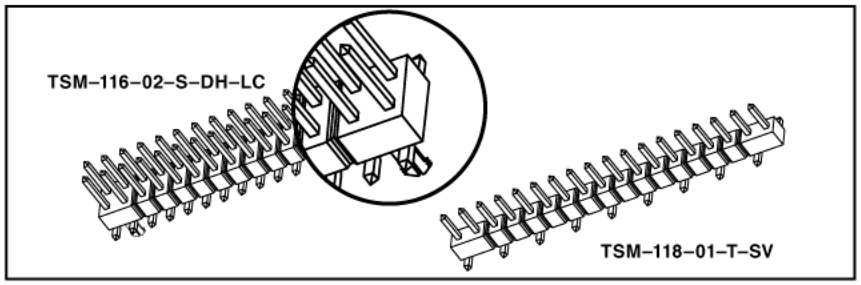

RoHS Compliant
Pb LEAD
www.samtec.com/lead-free

Surface SMT Mount

.025" SQ TERMINAL STRIPS TSM SERIES

Mates with:
SSW, SSQ, SSM, BSW, ESW, ESQ, BCS, SLW, CES, IDSS, IDSD, HLE

TSM – 1 – NO. PINS PER ROW – LEAD STYLE – PLATING OPTION – ROW OPTION –

NO. PINS PER ROW: 02 thru 36

LEAD STYLE:
- –01 = .230" (5,84mm) Post Height (Mates with SSW, BCS, SSM, IDSS, IDSD)
- –02 = .320" (8,13mm) Post Height (Mates with SSM -DH)
- –03 = .420" (10,67mm) Post Height (For Bottom Mount & Pass Through)
- –04 = .120" (3,05mm) Post Height (Mates with SLW, CES, HLE)

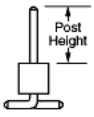

PLATING OPTION:
- –S = 30µ" (0,76µm) Gold on post, Matte Tin on tail
- –L = 10µ" (0,25µm) Gold on post, Matte Tin on tail
- –T = Matte Tin on tail

ROW OPTION: Edge Mount available. Call Samtec.

SPECIFICATIONS

For complete specifications and recommended PCB layouts see www.samtec.com?TSM

Insulator Material:
Black Liquid Crystal Polymer
FILE NO. E111594
Terminal Material:
Phosphor Bronze
Plating:
Au or Sn over 50µ" (1,27µm) Ni
Operating Temp Range:
-55°C to +105°C with Tin;
-55°C to +125°C with Gold
Voltage Rating:
475 VAC -SV/-DV mated with BCS or SSM

AMBIENT TEMPERATURE	CURRENT RATING
20°C	7A
40°C	6A
60°C	4A
80°C	3A

Processing:

Max Processing Temp:
230°C for 60 seconds, or
260°C for 20 seconds 3x
Lead–Free Solderable:
Yes
-DH/-SH Lead Coplanarity:
(0,15mm) .006" max (02-36)
-DV/-SV Lead Coplanarity:
(0,10mm) .004" max (02-05)
(0,13mm) .005" max (06-10)
(0,15mm) .006" max (11-36)

–SV = Single Row Vertical Pin

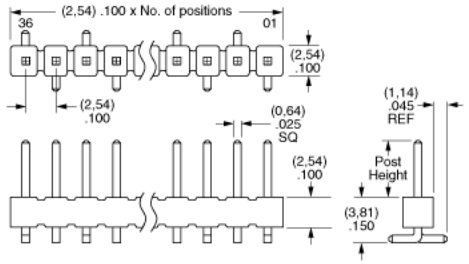

–DV = Double Row Vertical Pin

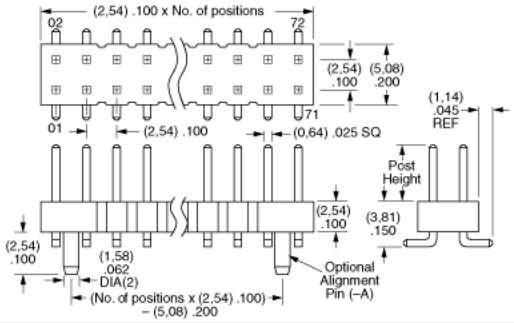

–SH = Single Row Horizontal Pin

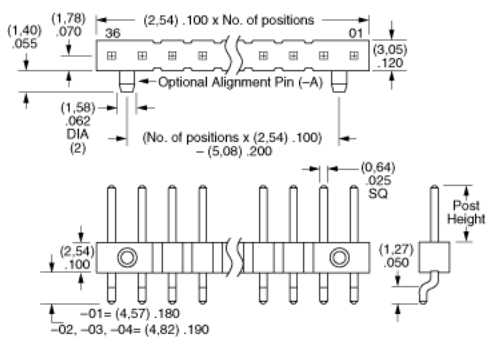

–DH = Double Row Horizontal Pin (Style –01, –02 or –03 only)

–MT = Mixed Technology Pin (Style –01, –02 or –03 only)

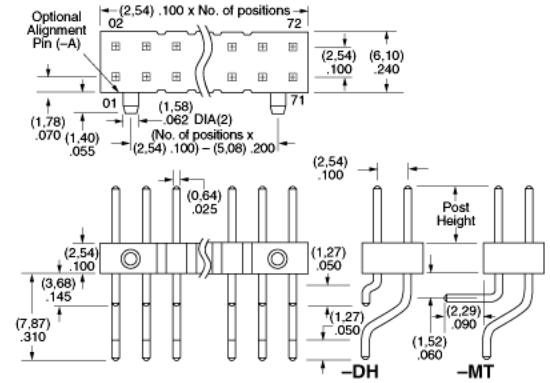

APPLICATIONS



Note: Some lengths, styles and options are non-standard, non-returnable.

Due to technical progress, all designs, specifications and components are subject to change without notice.

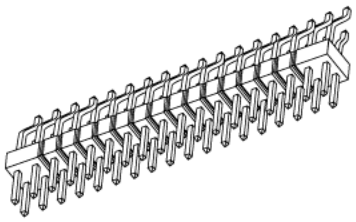

TSM–118–01–L–DH



TSM–115–01–T–SH–A

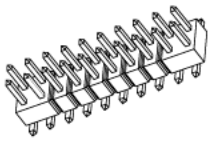

TSM–110–01–T–DV

OTHER OPTIONS

–A
= Alignment Pin Metal or plastic at Samtec discretion N/A with –TV, TM or –MT. (02 positions minimum)

–LC
= Locking Clip (Not available with –TV or –TM) (3 positions minimum)

–K
= (6,50mm) .256" DIA Polyimide Film Pick & Place Pad (–SH & –DH only) (4 positions minimum)

–"XXX"
= Polarized Position

–P
=Plastic Pick & Place Pad
(–DV: 4 positions minimum without –TR; 2 & 3 positions available with –TR)
(–SH: 3 positions minimum without –TR; 2 positions available with –TR)
(–DH: 4 positions minimum without –TR)
(–SV: 4 positions minimum without –TR; 2 & 3 positions available with –TR)

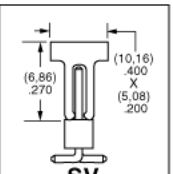

–SV

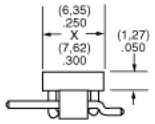

–SH & –DH

–M
= Metal Pick & Place Pad (4 positions minimum without –TR) (2 & 3 positions available with –TR) Styles –01 & –04 only

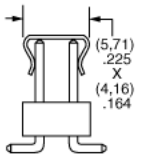

–DV

–TR
= Tape & Reel Packaging
(–SV = 02-22 positions;
02 & 03 positions only available with –P)
(–DV = 02-28 positions;
02 & 03 positions only available with –M)
(–SH = 02-30 positions;
02 position only available with –P)
N/A with –MT, –TV or –TM

TAPE & REEL AVAILABILITY
No tooling charges.
125 piece minimum order.
Order any quantity above minimum.
In-house design, manufacture.
Quick turn-around.
Call Samtec for specifications and ordering information.

–TV
= Triple Row Vertical Surface Mount (Style –01 only)

02 thru 30 positions only

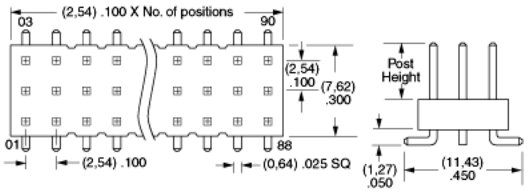

–TM
= Triple Row Vertical Mixed Technology (Style –01 only)

02 thru 30 positions only

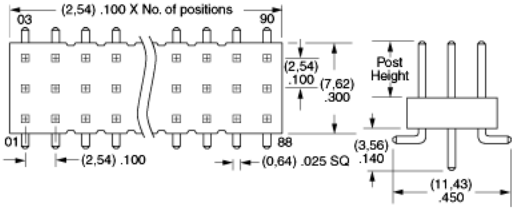

APPLICATION SPECIFIC OPTIONS

Edge Mount, Locking Clips for –SV, molded Pick-and-Place Pads, Solder Locks and Shrouds for –DH, and plastic Pick-and-Place Pads for –DV available. Call Samtec.

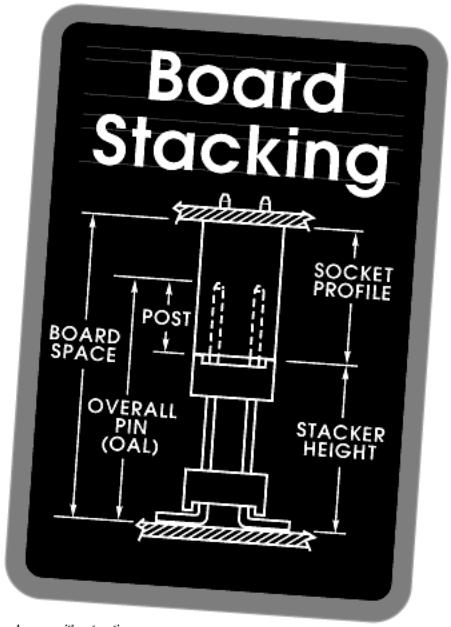

Due to technical progress, all designs, specifications and components are subject to change without notice.