TFSDX-XX-XXX-XX-XX.XX-XX-XXX

FEP CABLE OPTION
-T: FEP
(LEAVE BLANK FOR STANDARD PVC INSULATION)

No OF POSITIONS
-02 THRU -50 (PER ROW)

WIRE GAUGE (AWG)
-28, -30

COLOR CODE
LEAVE BLANK FOR ALL BLACK WIRE,
C: COLOR CODED WIRE, SEE COLOR SEQUENCE TABLE, SHEET 2
(NOT AVAILABLE WITH FEP OPTION)

PLATING SPECIFICATION
-H: 30µ" HEAVY GOLD IN CONTACT AREA, 3µ" GOLD ON TAIL
-G: 10µ" LIGHT GOLD IN CONTACT AREA, 10µ" GOLD ON TAIL ON TAIL
-F: 3µ" FLASH GOLD IN CONTACT AREA, 3µ" GOLD ON TAIL
-GF: 3µ" FLASH GOLD IN CONTACT AREA, 3µ" GOLD ON TAIL
(-GF ONLY AVAILABLE TO EXISTING CUSTOMERS, SEE –F PLATING)

END OPTION
-S: SINGLE END
*** -SL: SINGLE END WITH FRICTION LOCK (SEE SHEET 2, FIG 4)
** -D: DOUBLE END (SEE SHEET 2, FIG 2)
** -T: TRANSFER END (SEE SHEET 2, FIG 3 AND SHEET 4)
*** -DL: DOUBLE END WITH FRICTION LOCK (SEE SHEET 2, FIG 5)
*** -TF: TRANSFER END WITH FRICTION LOCK (SEE SHEET 2, FIG 6)
** -TR: TRANSFER END W/RETENTION LATCH(SEE SHEET 5)(MUST CHOOSE FROM -NXX OPTIONS) (ONLY AVAILABLE IN -05 THRU -50 POS)

-NXX OPTION (END 2)
(ONLY AVAILABLE WITH -D,-DL,-T,-TF,TR)
(SEE SHT 3 FOR -D PINOUT)
(SEE SHT 4 FOR -T PINOUT)
-NUS: NOTCH UP, STRAIGHT
-NDS: NOTCH DOWN, STRAIGHT
-NUX: NOTCH UP, CROSSED
-NDX: NOTCH DOWN, CROSSED

ASSEMBLED LENGTH
SPECIFY IN INCHES
(SINGLE END: 03.00 INCH [76.2mm] MINIMUM, DOUBLE OR TRANSFER END: 03.25 INCH [82.6mm] MINIMUM)

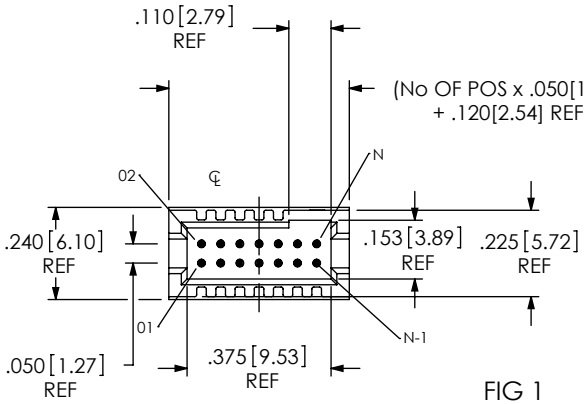

FIG 1

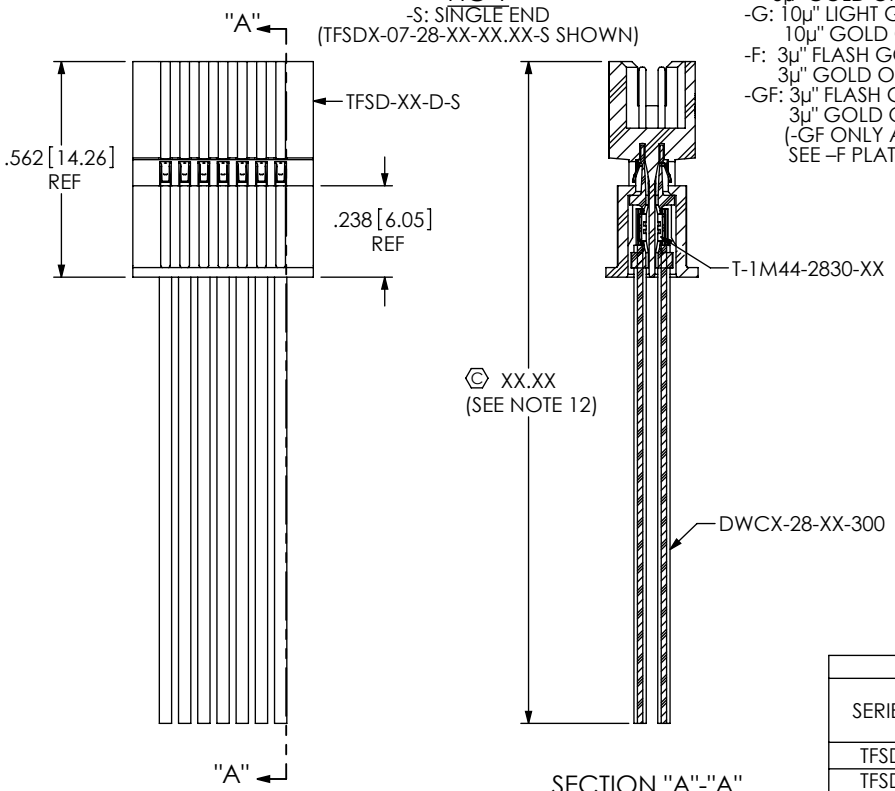

SECTION "A"-"A"

** MUST CHOOSE FROM -NXX OPTIONS
*** ONLY AVAILABLE ON POS 5, 7, & 10 - 50

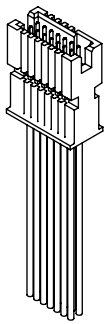

TABLE 1				
SERIES	WIRE GAUGE	WIRE	PIN	CONTACT (ONLY USED WITH -T, -TF & -TR END OPTIONS)
TFSD	28 AWG	DWC-28-XX-300	T-1M44-2830-XX	C-203-2830-XX
TFSD	30 AWG	DWC-30-XX-300	T-1M44-2830-XX	C-203-2830-XX
TFSDT	28 AWG	DWCT-28-XX-TC	T-1M44-2830-XX	C-203-2830-XX
TFSDT	30 AWG	DWCT-30-XX-TC	T-1M44-2830-XX	C-203-2830-XX

NOTES:

1. Ⓒ REPRESENTS A CRITICAL DIMENSION.
2. MINIMUM PULLOUT FORCE: 3 LBS [13.3 N].
3. Ⓒ CONTACT MUST BE INSERTED UNTIL RETENTION FEATURE LOCKS INTO PLACE.
4. ALL FINISHED GOODS ARE TO BE ELECTRICAL TESTED INCLUDING HI-POT TEST AT 300 V. AFTER FINAL ELECTRICAL TEST, LABEL EACH ASSEMBLY WITH 1 LABEL-ET.
5. TINNED COPPER WIRE IS RoHS COMPLIANT.
6. PARTS TO BE LAYER PACKAGED.
7. END OF DISCRETE WIRE MUST BE IN THE RANGE AFTER CRIMP.
8. REFER TO CRIMP SPECIFICATIONS PRINT FOR CRIMP AND STRIP DIMENSIONS, TOLERANCES, TOOLING AND ITS REQUIREMENTS.
9. NOTE DELETED.
10. NOTE DELETED.
11. NOTE DELETED.
12. FOR LENGTHS LESS THAN 12 IN, TOLERANCE SHALL BE ±.125[3.18]. FOR OTHER LENGTHS, TOLERANCES SHALL BE ±2%.

F:\DWG\MISC\MKTG\TFSDX-XX-XXX-XX-XX.XX-XX-XXX-MKT.SLDDRW

UNLESS OTHERWISE SPECIFIED, DIMENSIONS ARE IN INCHES.
TOLERANCES ARE:
DECIMALS: .XX: ±.01 [.3] .XXX: ±.005 [.13] .XXXX: ±.0020 [.051]
ANGLES: 2°

PROPRIETARY NOTE
THIS DOCUMENT CONTAINS INFORMATION CONFIDENTIAL AND PROPRIETARY TO SAMTEC, INC. AND SHALL NOT BE REPRODUCED OR TRANSFERRED TO OTHER DOCUMENTS OR DISCLOSED TO OTHERS OR USED FOR ANY PURPOSE OTHER THAN THAT WHICH IT WAS OBTAINED WITHOUT THE EXPRESSED WRITTEN CONSENT OF SAMTEC, INC.

520 PARK EAST BLVD, NEW ALBANY, IN 47150
PHONE: 812-944-6733 FAX: 812-948-5047
e-Mail info@SAMTEC.com code 55322

MATERIAL: DO NOT SCALE DRAWING SHEET SCALE: 2:1
INSULATOR: LCP, COLOR: BLACK
CONTACT: BeCu
CABLE INSULATION: SEE CALLOUT
WIRE: DWC: TINNED COPPER.
DWCT: TIN PLATED COPPER
(SEE TABLE 1)

DESCRIPTION:
.050[1.27] SOCKET DISCRETE CABLE ASSEMBLY

DWG. NO.
TFSDX-XX-XXX-XX-XX.XX-XX-XXX

BY: LENNY K 7/18/06

REVISION Y

FIG 2
-D: DOUBLE END
(TFSDX-07-28-XX-XX.XX-D-NUS SHOWN)
(SAME AS FIG 1, UNLESS OTHERWISE STATED)

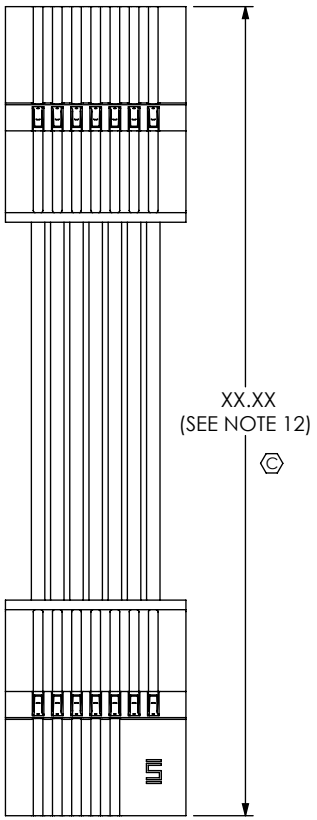

FIG 3
-T:TRANSFER END
(TFSDX-07-28-XX-XX.XX-T-NUS SHOWN)
(SAME AS FIG 1, UNLESS OTHERWISE STATED)

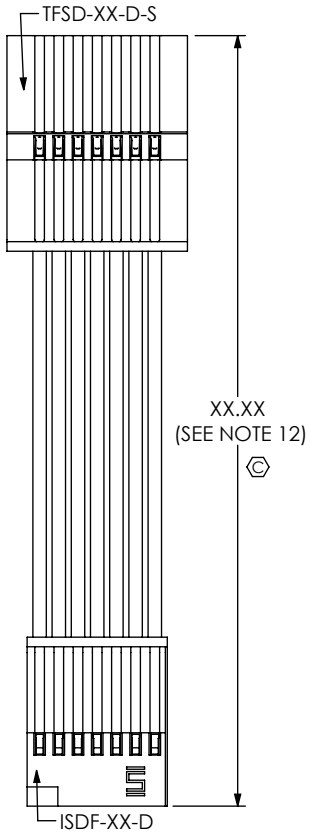

FIG 4
-SL: SINGLE END WITH FRICTION LOCK
(TFSDX-07-28-XX-XX.XX-SL SHOWN)
(SAME AS FIG 1, UNLESS OTHERWISE STATED)

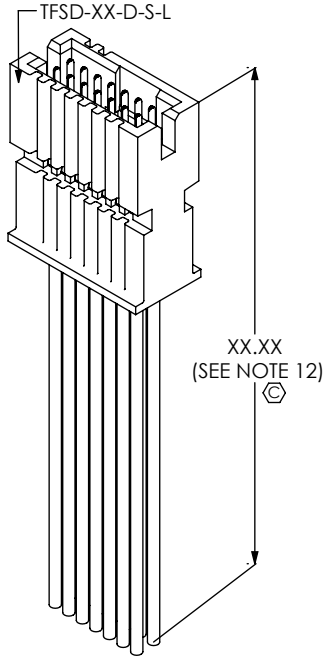

FIG 5
-DL: DOUBLE END WITH FRICTION LOCK
(TFSDX-07-28-XX-XX.XX-DL-NUS SHOWN)
(SAME AS FIG 1, UNLESS OTHERWISE STATED)

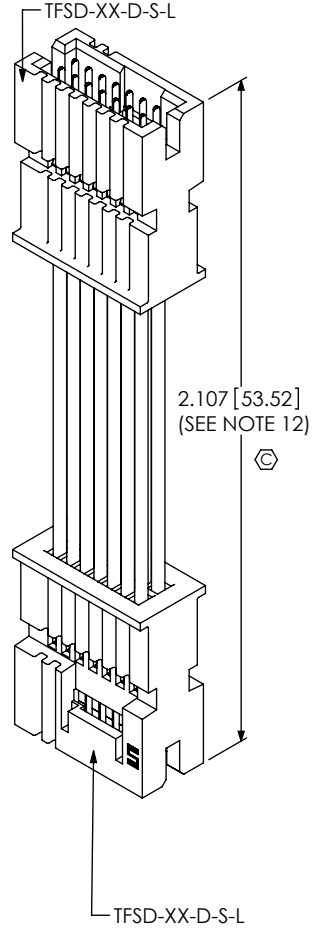

FIG 6
-TF: TRANSFER END WITH FRICTION LOCK
(TFSDX-07-28-XX-XX.XX-TF-NUS SHOWN)
(SAME AS FIG 1, UNLESS OTHERWISE STATED)

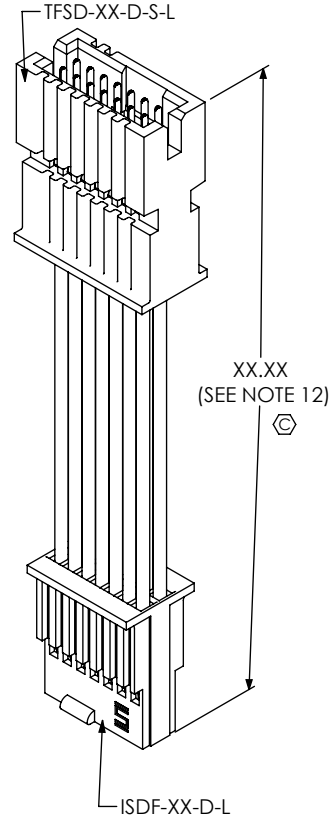

TFSS color coded wire sequence

	COLOR									
	brown	red	orange	yellow	dk green	violet	gray	white	black	dk blue
pin #	1	2	3	4	5	6	7	8	9	10
	11	12	13	14	15	16	17	18	19	20
	21	22	23	24	25	26	27	28	29	30
	31	32	33	34	35	36	37	38	39	40
	41	42	43	44	45	46	47	48	49	50
	51	52	53	54	55	56	57	58	59	60

F:\DWG\MISC\MKTG\TFSDX-XX-XXX-XX-XX.XX-XX-XXX-MKT.SLDDRW

PROPRIETARY NOTE
THIS DOCUMENT CONTAINS INFORMATION CONFIDENTIAL AND PROPRIETARY TO SAMTEC, INC. AND SHALL NOT BE REPRODUCED OR TRANSFERRED TO OTHER DOCUMENTS OR DISCLOSED TO OTHERS OR USED FOR ANY PURPOSE OTHER THAN THAT WHICH IT WAS OBTAINED WITHOUT THE EXPRESSED WRITTEN CONSENT OF SAMTEC, INC.

DO NOT SCALE DRAWING

SHEET SCALE: 2:1

520 PARK EAST BLVD, NEW ALBANY, IN 47150
PHONE: 812-944-6733 FAX: 812-948-5047
e-Mail info@SAMTEC.com code 55322

DESCRIPTION:
.050[1.27] SOCKET DISCRETE CABLE ASSEMBLY

DWG. NO.
TFSDX-XX-XXX-XX-XX.XX-XX-XXX

BY: LENNY K 7/18/06

REVISION Y

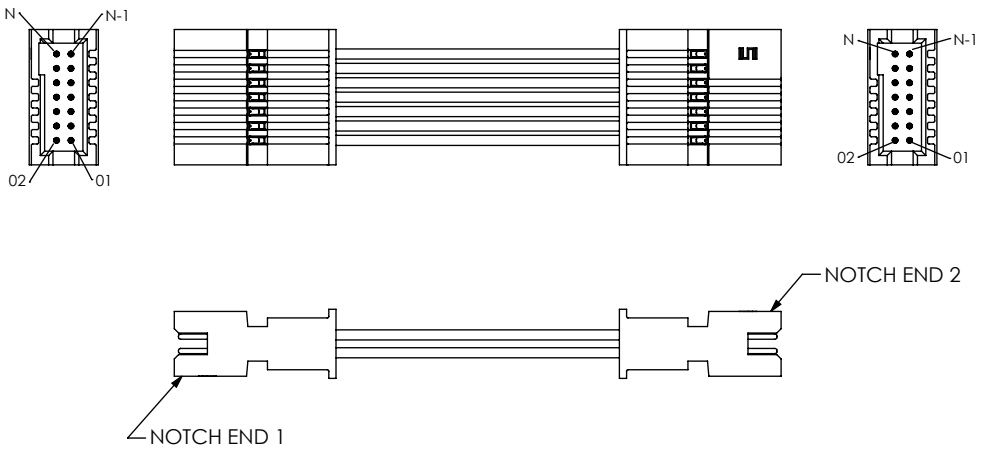

-NUS
(END 2 NOTCH UP, CABLE STRAIGHT)
(PIN 1 TO PIN 2)

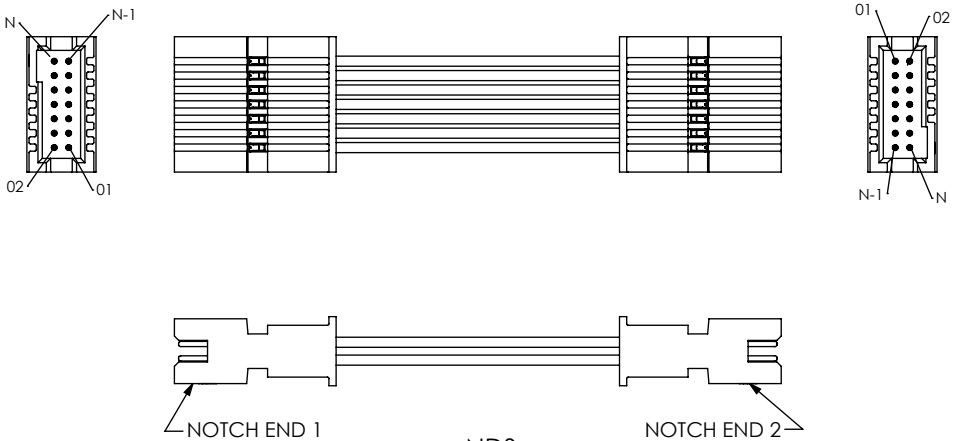

-NDS
(END 2 NOTCH DOWN, CABLE STRAIGHT)
(PIN 1 TO PIN N-1)

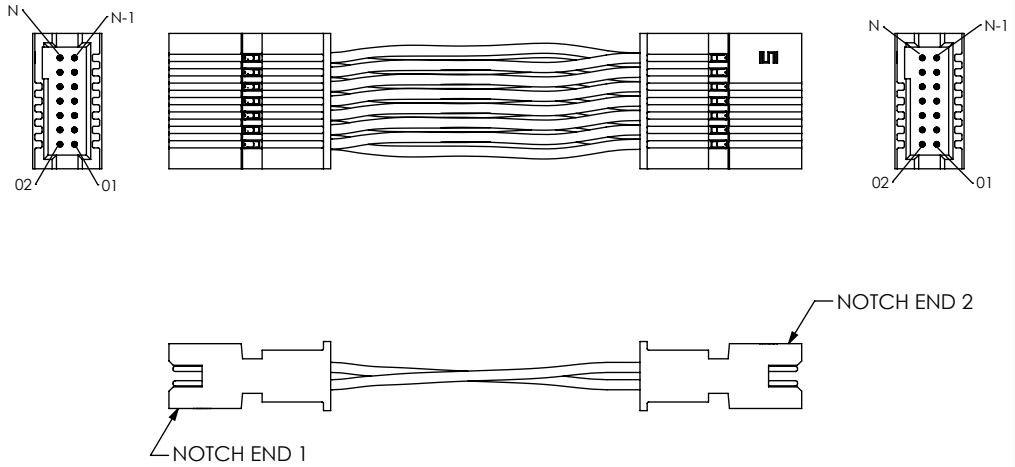

-NUX
(END 2 NOTCH UP, CABLE CROSSED)
(PIN 1 TO PIN 1)

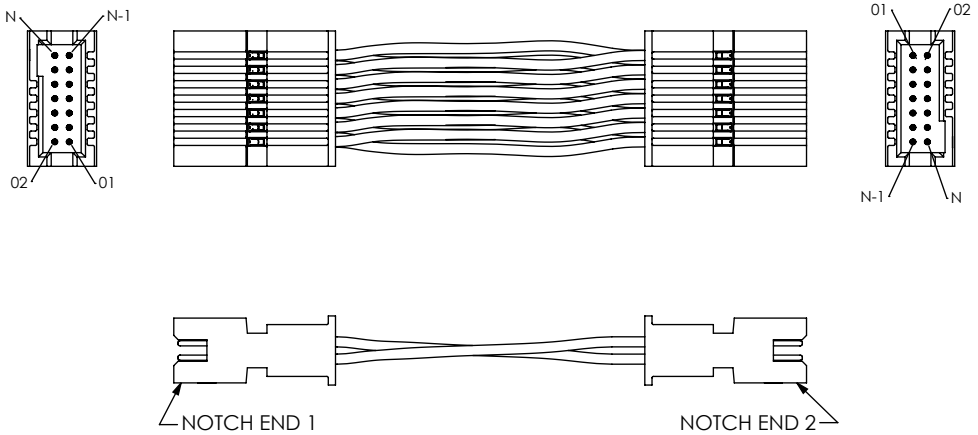

-NDX
(END 2 NOTCH DOWN, CABLE CROSSED)
(PIN 1 TO PIN N)

PROPRIETARY NOTE

THIS DOCUMENT CONTAINS INFORMATION CONFIDENTIAL AND PROPRIETARY TO SAMTEC, INC. AND SHALL NOT BE REPRODUCED OR TRANSFERRED TO OTHER DOCUMENTS OR DISCLOSED TO OTHERS OR USED FOR ANY PURPOSE OTHER THAN THAT WHICH IT WAS OBTAINED WITHOUT THE EXPRESSED WRITTEN CONSENT OF SAMTEC, INC.

DO NOT SCALE DRAWING

SHEET SCALE: 1.75:1

samtec
520 PARK EAST BLVD, NEW ALBANY, IN 47150
PHONE: 812-944-6733 FAX: 812-948-5047
e-Mail info@SAMTEC.com code 55322

DESCRIPTION:
.050[1.27] SOCKET DISCRETE CABLE ASSEMBLY

DWG. NO.
TFSDX-XX-XXX-XX-XX.XX-XX-XXX

BY: LENNY K 7/18/06

F:\DWG\MISC\MKTG\TFSDX-XX-XXX-XX-XX.XX-XX-XXX-MKT.SLDDRW

REVISION Y

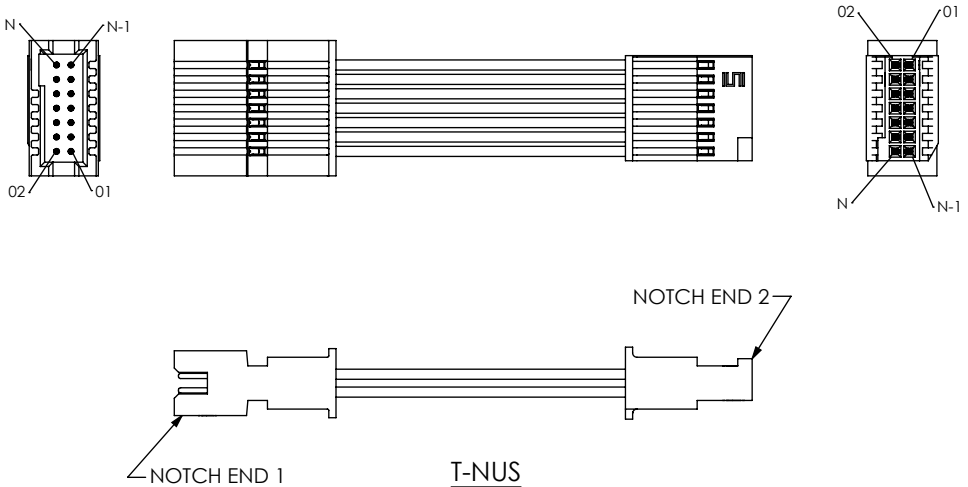

T-NUS
(END 2 NOTCH UP, CABLE STRAIGHT)
(PIN 1 TO PIN N)

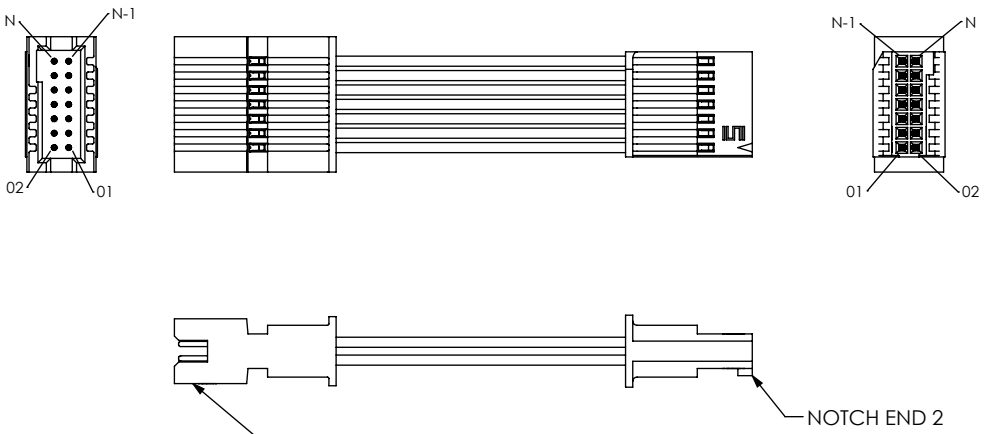

T-NDS
(END 2 NOTCH DOWN, CABLE STRAIGHT)
(PIN 1 TO PIN 1)

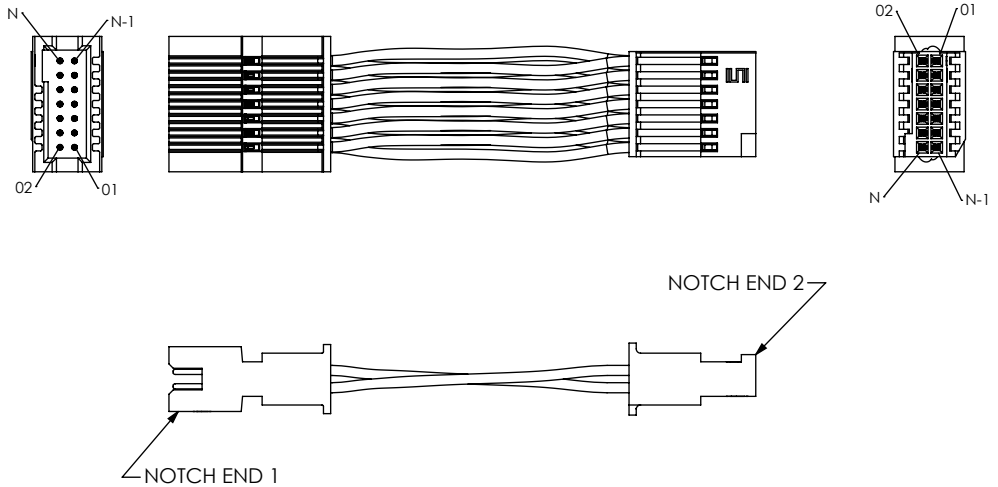

T-NUX
(END 2 NOTCH UP, CABLE CROSSED)
(PIN 1 TO PIN N-1)

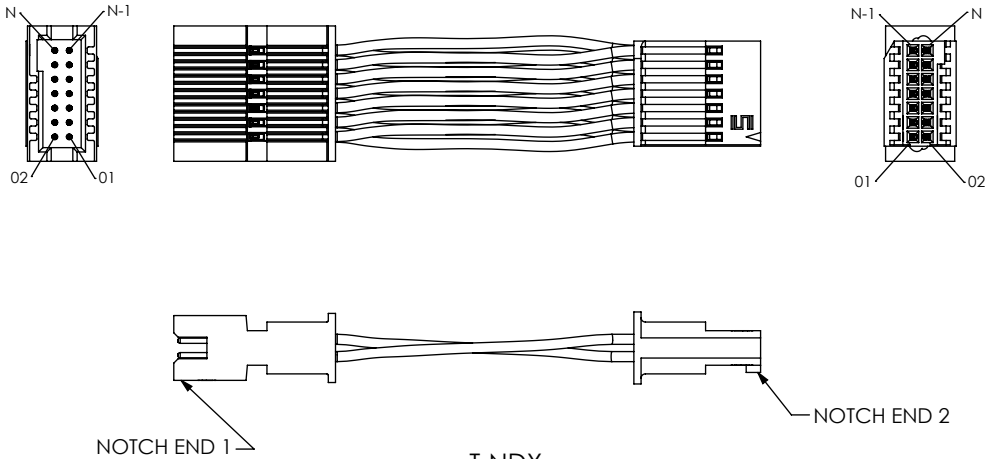

T-NDX
(END 2 NOTCH DOWN, CABLE CROSSED)
(PIN 1 TO PIN 2)

F:\DWG\MISC\MKTG\TFSDX-XX-XXX-XX-XX.XX-XX-XXX-MKT.SLDDRW

PROPRIETARY NOTE
THIS DOCUMENT CONTAINS INFORMATION CONFIDENTIAL AND PROPRIETARY TO SAMTEC, INC. AND SHALL NOT BE REPRODUCED OR TRANSFERRED TO OTHER DOCUMENTS OR DISCLOSED TO OTHERS OR USED FOR ANY PURPOSE OTHER THAN THAT WHICH IT WAS OBTAINED WITHOUT THE EXPRESSED WRITTEN CONSENT OF SAMTEC, INC.

DO NOT SCALE DRAWING

SHEET SCALE: 2:1

520 PARK EAST BLVD, NEW ALBANY, IN 47150
PHONE: 812-944-6733 FAX: 812-948-5047
e-Mail info@SAMTEC.com code 55322

DESCRIPTION:
.050[1.27] SOCKET DISCRETE CABLE ASSEMBLY

DWG. NO.
TFSDX-XX-XXX-XX-XX.XX-XX-XXX

BY: LENNY K 7/18/06

REVISION Y

FIG 7
-TR: TRANSFER END WITH RETENTION LATCH
(TFSDX-07-28-XX-XX.XX-TR-NUS SHOWN)
(SAME AS FIG 1, UNLESS OTHERWISE STATED)

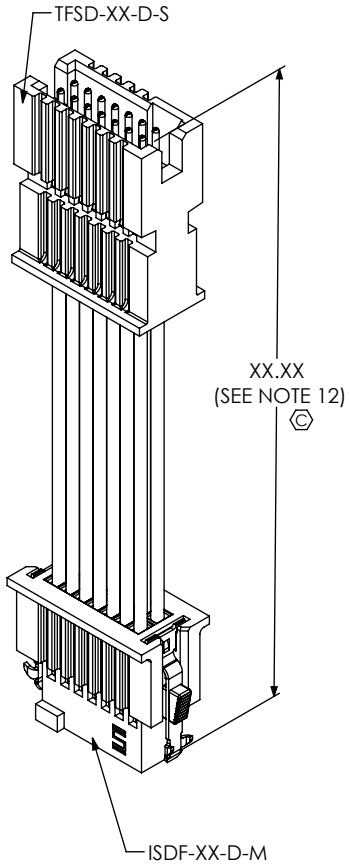

FIG 8
-TR: TRANSFER END WITH RETENTION LATCH
(TFSDX-07-28-XX-XX.XX-TR-NDS SHOWN)
(SAME AS FIG 1, UNLESS OTHERWISE STATED)

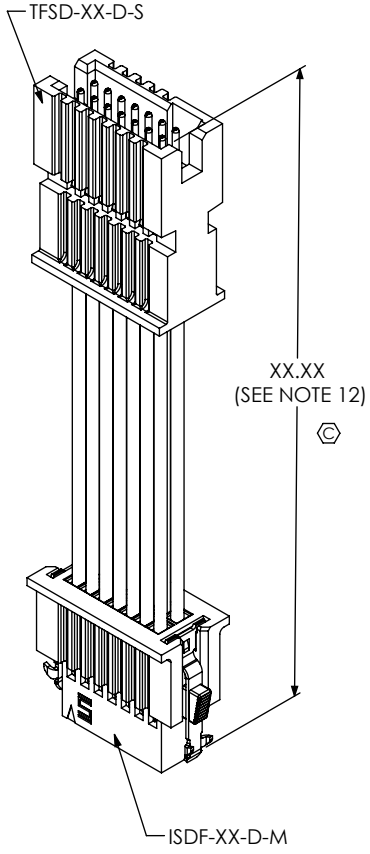

FIG 9
-TR: TRANSFER END WITH RETENTION LATCH
(TFSDX-07-28-XX-XX.XX-TR-NDX SHOWN)
(SAME AS FIG 1, UNLESS OTHERWISE STATED)

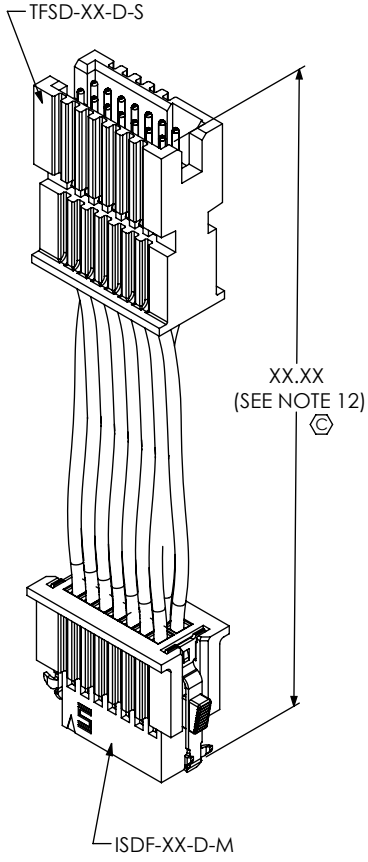

FIG 10
-TR: TRANSFER END WITH RETENTION LATCH
(TFSSX-07-28-XX-XX.XX-TR-NUX SHOWN)
(SAME AS FIG 1, UNLESS OTHERWISE STATED)

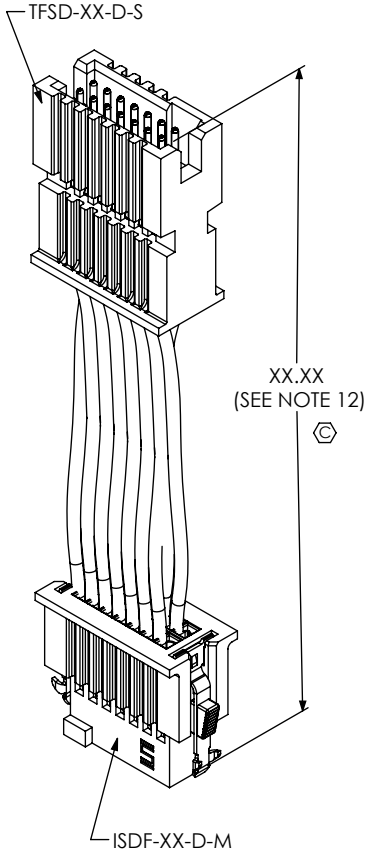

PROPRIETARY NOTE
THIS DOCUMENT CONTAINS INFORMATION CONFIDENTIAL AND PROPRIETARY TO SAMTEC, INC. AND SHALL NOT BE REPRODUCED OR TRANSFERRED TO OTHER DOCUMENTS OR DISCLOSED TO OTHERS OR USED FOR ANY PURPOSE OTHER THAN THAT WHICH IT WAS OBTAINED WITHOUT THE EXPRESSED WRITTEN CONSENT OF SAMTEC, INC.

DO NOT SCALE DRAWING

SHEET SCALE: 2:1

F:\DWG\MISC\MKTG\TFSDX-XX-XXX-XX-XX.XX-XX-XXX-MKT.SLDDRW

samtec
520 PARK EAST BLVD, NEW ALBANY, IN 47150
PHONE: 812-944-6733 FAX: 812-948-5047
e-Mail info@SAMTEC.com code 55322

DESCRIPTION:
.050[1.27] SOCKET DISCRETE CABLE ASSEMBLY

DWG. NO.
TFSDX-XX-XXX-XX-XX.XX-XX-XXX

BY: LENNY K 7/18/06