REVISION B

DO NOT SCALE FROM THIS PRINT

MRTDX-XX-XXX-X-XX.X-XX

FEP CABLE OPTION
-T: FEP
(LEAVE BLANK FOR STANDARD PVC INSULATION)

No OF POSITIONS
-02 THRU -15 (PER ROW)

WIRE GAUGE (AWG)
-20, -22, -24, -26, -28, -30
FEP: -20, -24, -28, -30

COLOR CODE
-C (SEE TABLE 2)
(LEAVE BLANK FOR STANDARD BLACK CABLE)
(NOT AVAILABLE WITH FEP OPTION)

PLATING SPECIFICATION
-F: 3µ" SELECTIVE GOLD IN CONTACT AREA, MATTE TIN ON TAIL
-L: 10µ" SELECTIVE GOLD IN CONTACT AREA, MATTE TIN ON TAIL
-S: 30µ" SELECTIVE GOLD IN CONTACT AREA, MATTE TIN ON TAIL

ASSEMBLED LENGTH
SPECIFY IN INCHES [USE DWCX-XX-XX]
(SINGLE END: 03.0[76] INCH MINIMUM,
DOUBLE END: 03.3[84] INCH MINIMUM)

LATCH OPTION
(LEAVE BLANK FOR SINGLE END ASSEMBLY)
-L: PLASTIC LATCH
(SEE FIG 4 & 5, SHT 2)
-M: METAL LATCH
(SEE FIG 2 & 3, SHT 2)

PINOUT
(LEAVE BLANK FOR SINGLE END ASSEMBLY)
-1: TRANSFER LATCH UP, STRAIGHT
(PIN 01 TO 01, SEE FIG 2 & 4, SHT 2)
-4: TRANSFER LATCH DOWN, STRAIGHT
(PIN 01 TO N, SEE FIG 3 & 5, SHT 2)

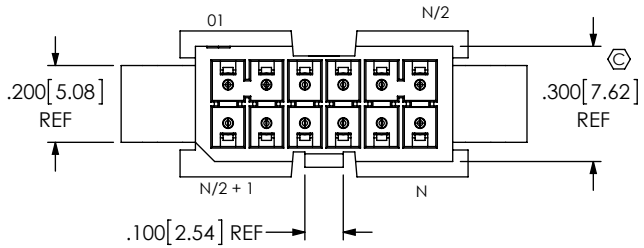

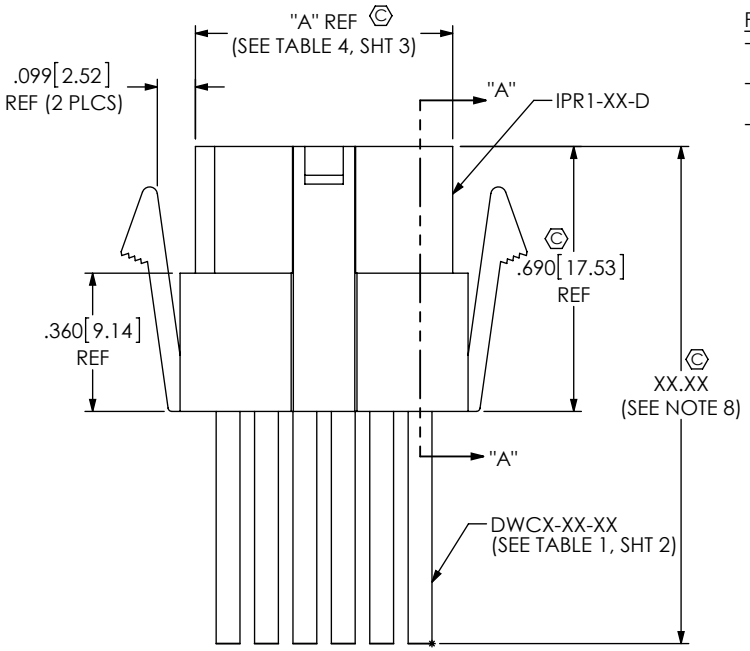

FIG 1
MRTD-06-XXX-X-XX.X SHOWN

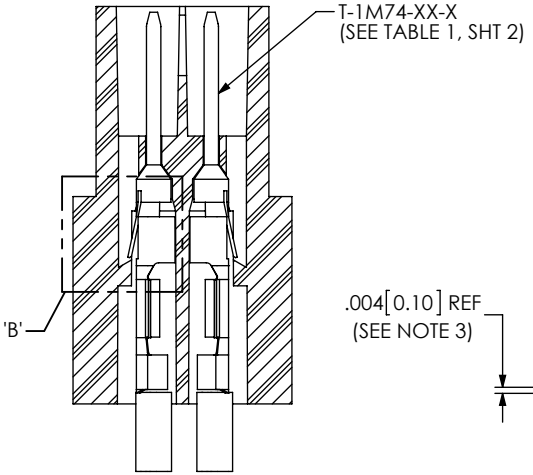

SECTION "A"-"A"
SCALE 3 : 1

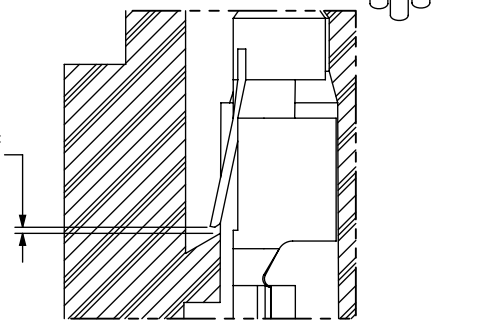

DETAIL 'B'
SCALE 8 : 1

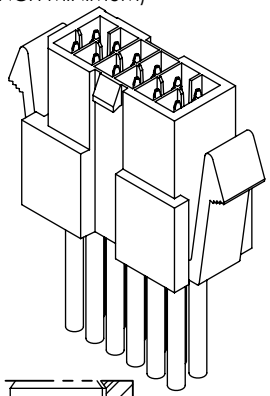

NOTES:

1. Ⓒ REPRESENTS A CRITICAL DIMENSION.
2. MINIMUM PULLOUT FORCE: 0.5 lbs [2.22 N].
3. CONTACT MUST BE INSERTED UNTIL RETENTION FEATURE LOCKS INTO PLACE.
4. Ⓒ ALL FINISHED GOODS ARE TO BE ELECTRICAL TESTED INCLUDING HI-POT TEST @ 1000 VOLTS DC.
5. TINNED COPPER WIRE IS ROHS COMPLIANT.
6. PARTS ARE TO BE LAYER PACKAGED.
7. REFER TO CRIMP SPECIFICATIONS PRINT FOR CRIMP AND STRIP DIMENSIONS, TOLERANCES, TOOLING AND ITS REQUIREMENTS.
8. FOR LENGTHS LESS THAN 12 IN[304.8], TOLERANCE SHALL BE ±.125[3.18]. FOR OTHER LENGTHS, TOLERANCES SHALL BE ± 2%.
9. PANEL HOLE TO BE PUNCHED OUT IN THE SAME DIRECTION AS INSERTION INTO THE PANEL.

UNLESS OTHERWISE SPECIFIED, DIMENSIONS ARE IN INCHES.
TOLERANCES ARE:
DECIMALS: .XX: ±.01 [.3] .XXX: ±.005 [.13] .XXXX: ±.0020 [.051]
ANGLES: 2°

PROPRIETARY NOTE
THIS DOCUMENT CONTAINS INFORMATION CONFIDENTIAL AND PROPRIETARY TO SAMTEC, INC. AND SHALL NOT BE REPRODUCED OR TRANSFERRED TO OTHER DOCUMENTS OR DISCLOSED TO OTHERS OR USED FOR ANY PURPOSE OTHER THAN THAT WHICH IT WAS OBTAINED WITHOUT THE EXPRESSED WRITTEN CONSENT OF SAMTEC, INC.

samtec
520 PARK EAST BLVD, NEW ALBANY, IN 47150
PHONE: 812-944-6733 FAX: 812-948-5047
e-Mail: info@SAMTEC.com code: 55322

MATERIAL: DO NOT SCALE DRAWING SHEET SCALE: 2:1
HOUSING: NYLON 66, COLOR: NATURAL
CONTACT: PHOS BRONZE
CABLE: INSULATION: SEE CALLOUT
WIRE: TINNED COPPER

F:\DWG\MISC\MKTG\MRTDX-XX-XXX-X-XX.X-XX-MKT.SLDDRW

DESCRIPTION:
.100[2.54] PANEL MOUNT TERMINAL CABLE ASSEMBLY

DWG. NO.
MRTDX-XX-XXX-X-XX.X-XX

BY: JESSIE W 7/5/2013 SHEET 1 OF 3

REVISION B

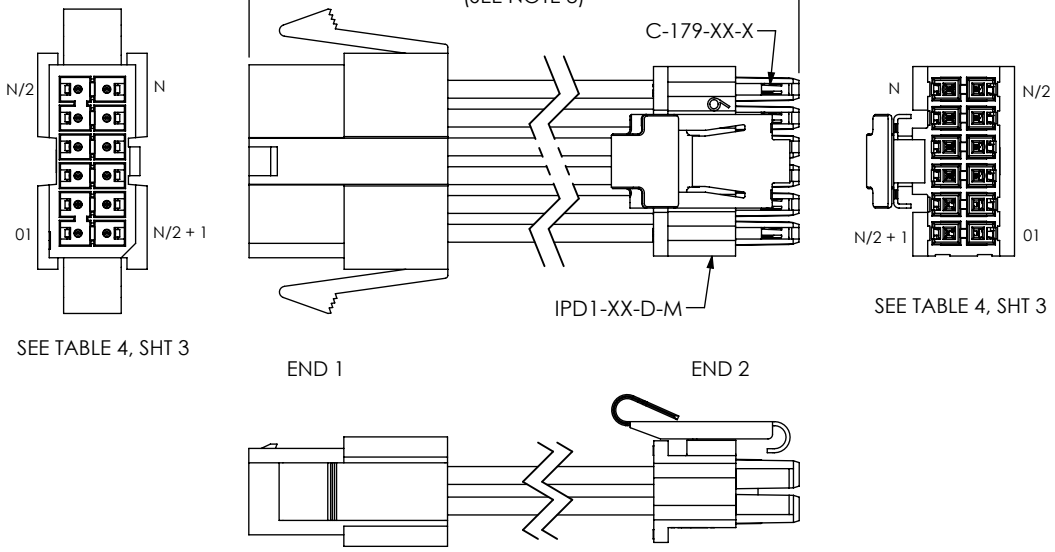

FIG 2
MRTD-06-XXX-X-XX.X-M1 SHOWN
(TRANSFER,LATCH UP, STRAIGHT)
(DIFFERENT AS SHOWN, OTHERWISE SAME AS FIG 1)

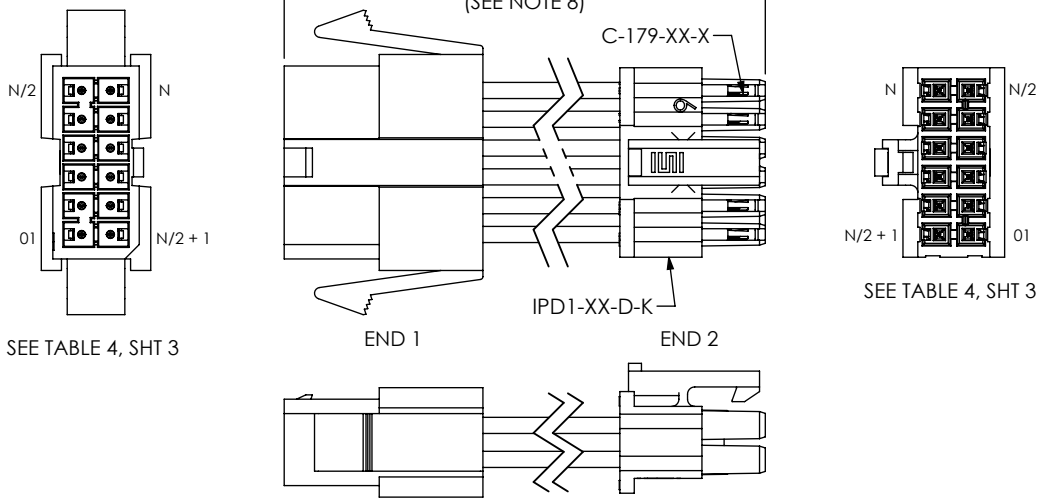

FIG 4
MRTD-06-XXX-X-XX.X-L1 SHOWN
(TRANSFER,LATCH UP, STRAIGHT)
(DIFFERENT AS SHOWN, OTHERWISE SAME AS FIG 1)

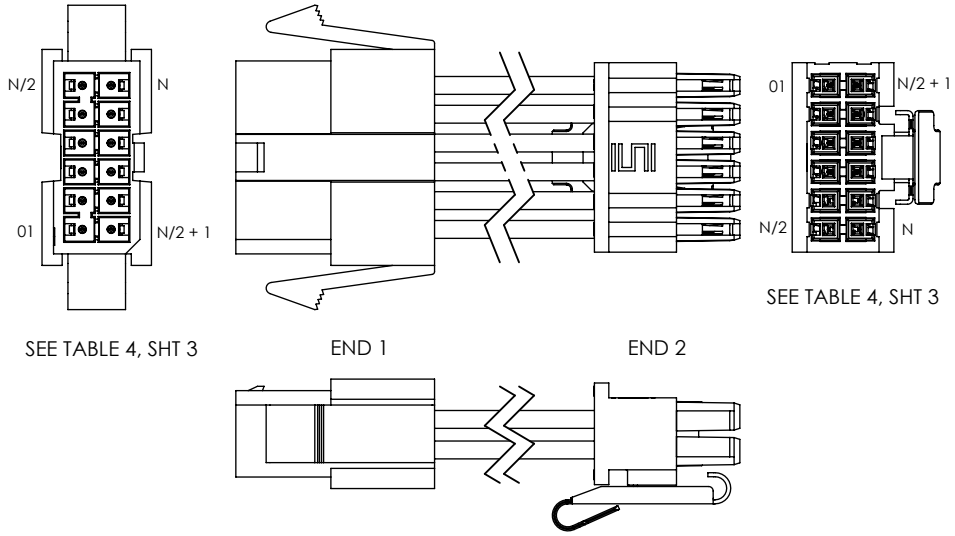

FIG 3
MRTD-06-XXX-X-XX.X-M4 SHOWN
(TRANSFER,LATCH DOWN, STRAIGHT)
(DIFFERENT AS SHOWN, OTHERWISE SAME AS FIG 2)

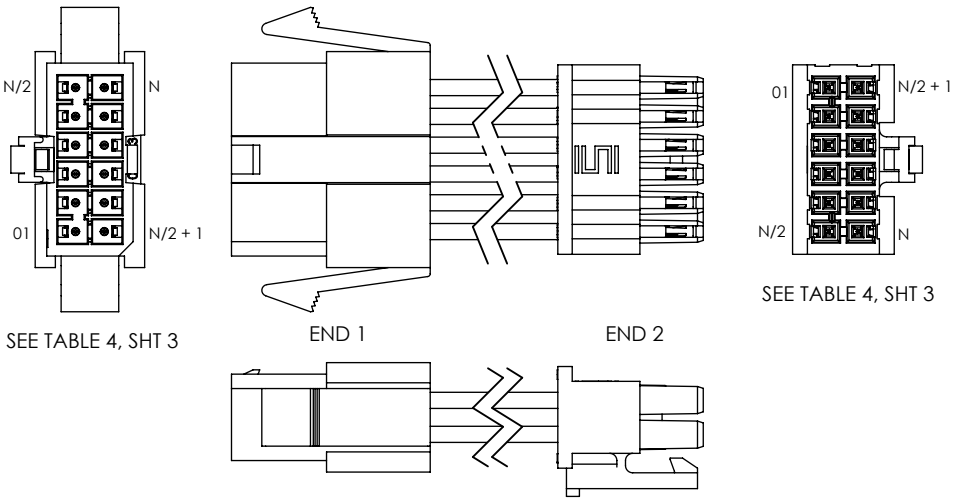

FIG 5
MRTD-06-XXX-X-XX.X-L4 SHOWN
(TRANSFER,LATCH DOWN, STRAIGHT)
(DIFFERENT AS SHOWN, OTHERWISE SAME AS FIG 4)

PROPRIETARY NOTE
THIS DOCUMENT CONTAINS INFORMATION CONFIDENTIAL AND PROPRIETARY TO SAMTEC, INC. AND SHALL NOT BE REPRODUCED OR TRANSFERRED TO OTHER DOCUMENTS OR DISCLOSED TO OTHERS OR USED FOR ANY PURPOSE OTHER THAN THAT WHICH IT WAS OBTAINED WITHOUT THE EXPRESSED WRITTEN CONSENT OF SAMTEC, INC.

DO NOT SCALE DRAWING

SHEET SCALE: 3:2

520 PARK EAST BLVD, NEW ALBANY, IN 47150
PHONE: 812-944-6733 FAX: 812-948-5047
e-Mail: info@SAMTEC.com code: 55322

DESCRIPTION:
.100[2.54] PANEL MOUNT TERMINAL CABLE ASSEMBLY

DWG. NO.
MRTDX-XX-XXX-X-XX.X-XX

BY: JESSIE W 7/5/2013 SHEET 2 OF 3

F:\DWG\MISC\MKTG\MRTDX-XX-XXX-X-XX.X-XX-MKT.SLDDRW

REVISION B

TABLE 3		
GAUGE	PANEL THICKNESS	
13	0.0897	[2.278]
14	0.0747	[1.897]
15	0.0673	[1.709]
16	0.0598	[1.519]
17	0.0538	[1.367]
18	0.0478	[1.214]
19	0.0418	[1.062]
20	0.0359	[0.912]
21	0.0329	[0.836]

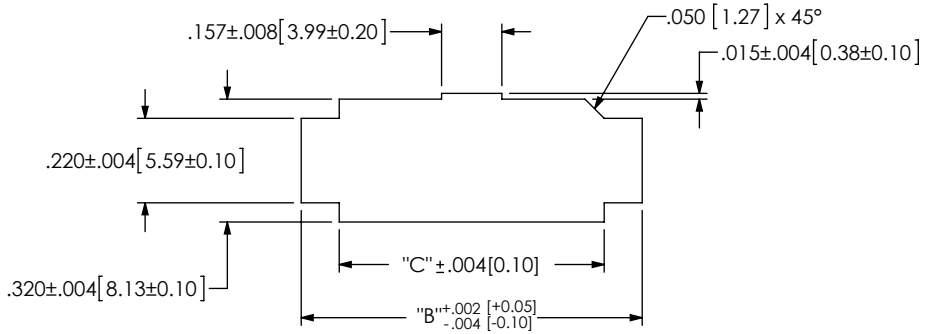

RECOMMENDED PANEL CUT OUT DIMENSIONS
THICKNESS: SEE TABLE 3
(SEE NOTE 9)

TABLE 2

MMTXX COLOR CODED WIRE SEQUENCE

	COLOR									
	BROWN	RED	ORANGE	YELLOW	GREEN	BLUE	VIOLET	GRAY	WHITE	BLACK
	DWC-XX-01-300	DWC-XX-02-300	DWC-XX-03-300	DWC-XX-04-300	DWC-XX-05-300	DWC-XX-13-300	DWC-XX-07-300	DWC-XX-08-300	DWC-XX-09-300	DWC-XX-10-300
PIN #	1	2	3	4	5	6	7	8	9	10
	11	12	13	14	15	16	17	18	19	20
	21	22	23	24	25	26	27	28	29	30
	31	32	33	34	35	36	37	38	39	40
	41	42	43	44	45	46	47	48	49	50

TABLE 4						
NO OF POS	"A"	"B"	"C"	N/2	N/2 + 1	N
02	.27 [6.9]	.488 [12.40]	.290 [7.37]	2	3	4
03	.37 [9.4]	.588 [14.94]	.390 [9.91]	3	4	6
04	.47 [11.9]	.688 [17.48]	.490 [12.45]	4	5	8
05	.57 [14.5]	.788 [20.02]	.590 [14.99]	5	6	10
06	.67 [17.0]	.888 [22.56]	.690 [17.53]	6	7	12
07	.77 [19.6]	.988 [25.10]	.790 [20.07]	7	8	14
08	.87 [22.1]	1.088 [27.64]	.890 [22.61]	8	9	16
09	.97 [24.6]	1.188 [30.18]	.990 [25.15]	9	10	18
10	1.07 [27.2]	1.288 [32.72]	1.090 [27.69]	10	11	20
11	1.17 [29.7]	1.388 [35.26]	1.190 [30.23]	11	12	22
12	1.27 [32.3]	1.488 [37.80]	1.290 [32.77]	12	13	24
13	1.37 [34.8]	1.588 [40.34]	1.390 [35.31]	13	14	26
14	1.47 [37.3]	1.688 [42.88]	1.490 [37.85]	14	15	28
15	1.57 [39.9]	1.788 [45.42]	1.590 [40.39]	15	16	30

TABLE 1				
SERIES	WIRE GAUGE	CABLE	TERMINAL	CONTACT
MRTD	20 AWG	DWC-20-XX-300	T-1M74-02-X	C-179-03-X
MRTD	22 AWG	DWC-22-XX-300	T-1M74-02-X	C-179-03-X
MRTD	24 AWG	DWC-24-XX-300	T-1M74-02-X	C-179-03-X
MRTD	26 AWG	DWC-26-XX-300	T-1M74-01-X	C-179-02-X
MRTD	28 AWG	DWC-28-XX-300	T-1M74-01-X	C-179-02-X
MRTD	30 AWG	DWC-30-XX-300	T-1M74-01-X	C-179-02-X
MRTDT	20AWG	DWCT-20-XX-TC	T-1M74-02-X	C-179-03-X
MRTDT	24AWG	DWCT-24-XX-TC	T-1M74-02-X	C-179-03-X
MRTDT	28AWG	DWCT-28-XX-TC	T-1M74-03-X	C-179-04-X
MRTDT	30AWG	DWCT-30-XX-TC	T-1M74-03-X	C-179-04-X

PROPRIETARY NOTE
THIS DOCUMENT CONTAINS INFORMATION CONFIDENTIAL AND PROPRIETARY TO SAMTEC, INC. AND SHALL NOT BE REPRODUCED OR TRANSFERRED TO OTHER DOCUMENTS OR DISCLOSED TO OTHERS OR USED FOR ANY PURPOSE OTHER THAN THAT WHICH IT WAS OBTAINED WITHOUT THE EXPRESSED WRITTEN CONSENT OF SAMTEC, INC.

DO NOT SCALE DRAWING

SHEET SCALE: 2:1

samtec
520 PARK EAST BLVD, NEW ALBANY, IN 47150
PHONE: 812-944-6733 FAX: 812-948-5047
e-Mail: info@SAMTEC.com code: 55322

DESCRIPTION:
.100[2.54] PANEL MOUNT TERMINAL CABLE ASSEMBLY

DWG. NO.
MRTDX-XX-XXX-X-XX.X-XX

BY: JESSIE W 7/5/2013 SHEET 3 OF 3

F:\DWG\MISC\MKTG\MRTDX-XX-XXX-X-XX.X-XX-MKT.SLDDRW