SDFS051B – MARCH 1987 – REVISED JULY 1996

- **Designed Specifically for High-Speed Memory Decoders and Data Transmission Systems**
- **Incorporates Three Enable Inputs to Simplify Cascading and/or Data Reception**
- **Package Options Include Plastic Small-Outline Packages, Ceramic Chip Carriers, and Standard Plastic and Ceramic 300-mil DIPs**

**SN54F138 . . . J PACKAGE**
**SN74F138 . . . D OR N PACKAGE**
**(TOP VIEW)**

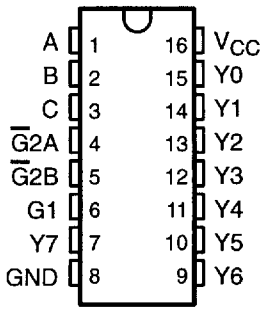


**SN54F138 . . . FK PACKAGE**
**(TOP VIEW)**

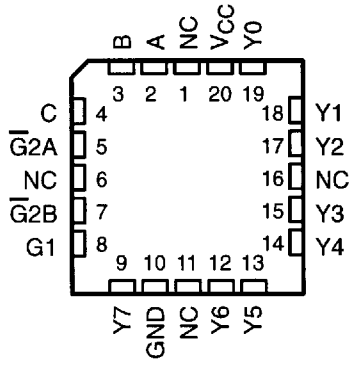


NC – No internal connection

## description

The 'F138 is designed to be used in high-performance memory-decoding or data-routing applications requiring very short propagation delay times. In high-performance memory systems, these decoders can be used to minimize the effects of system decoding. When employed with high-speed memories utilizing a fast enable circuit, the delay times of this decoder and the enable time of the memory are usually less than the typical access time of the memory. This means that the effective system delay introduced by the decoder is negligible.

The conditions at the binary-select inputs and the three enable inputs select one of eight output lines. Two active-low and one active-high enable inputs reduce the need for external gates or inverters when expanding. A 24-line decoder can be implemented without external inverters and a 32-line decoder requires only one inverter. An enable input can be used as a data input for demultiplexing applications.

The SN54F138 is characterized for operation over the full military temperature range of −55°C to 125°C. The SN74F138 is characterized for operation from 0°C to 70°C.

Please be aware that an important notice concerning availability, standard warranty, and use in critical applications of Texas Instruments semiconductor products and disclaimers thereto appears at the end of this data sheet.

PRODUCTION DATA information is current as of publication date. Products conform to specifications per the terms of Texas Instruments standard warranty. Production processing does not necessarily include testing of all parameters.

Copyright © 1996, Texas Instruments Incorporated



8961723 0106066 064

**FUNCTION TABLE**

| ENABLE INPUTS | | | SELECT INPUTS | | | OUTPUTS | | | | | | | |
|---|---|---|---|---|---|---|---|---|---|---|---|---|---|
| G1 | $\overline{G}$2A | $\overline{G}$2B | C | B | A | Y0 | Y1 | Y2 | Y3 | Y4 | Y5 | Y6 | Y7 |
| X | H | X | X | X | X | H | H | H | H | H | H | H | H |
| X | X | H | X | X | X | H | H | H | H | H | H | H | H |
| L | X | X | X | X | X | H | H | H | H | H | H | H | H |
| H | L | L | L | L | L | L | H | H | H | H | H | H | H |
| H | L | L | L | L | H | H | L | H | H | H | H | H | H |
| H | L | L | L | H | L | H | H | L | H | H | H | H | H |
| H | L | L | L | H | H | H | H | H | L | H | H | H | H |
| H | L | L | H | L | L | H | H | H | H | L | H | H | H |
| H | L | L | H | L | H | H | H | H | H | H | L | H | H |
| H | L | L | H | H | L | H | H | H | H | H | H | L | H |
| H | L | L | H | H | H | H | H | H | H | H | H | H | L |

## logic symbols (alternatives)†

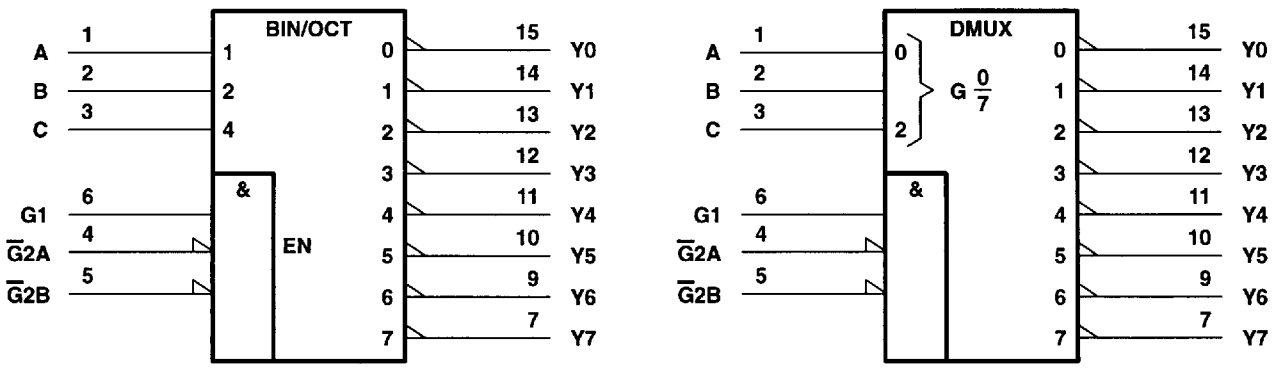


† These symbols are in accordance with ANSI/IEEE Std 91-1984 and IEC Publication 617-12.



8961723 0106067 TTO

## logic diagram (positive logic)

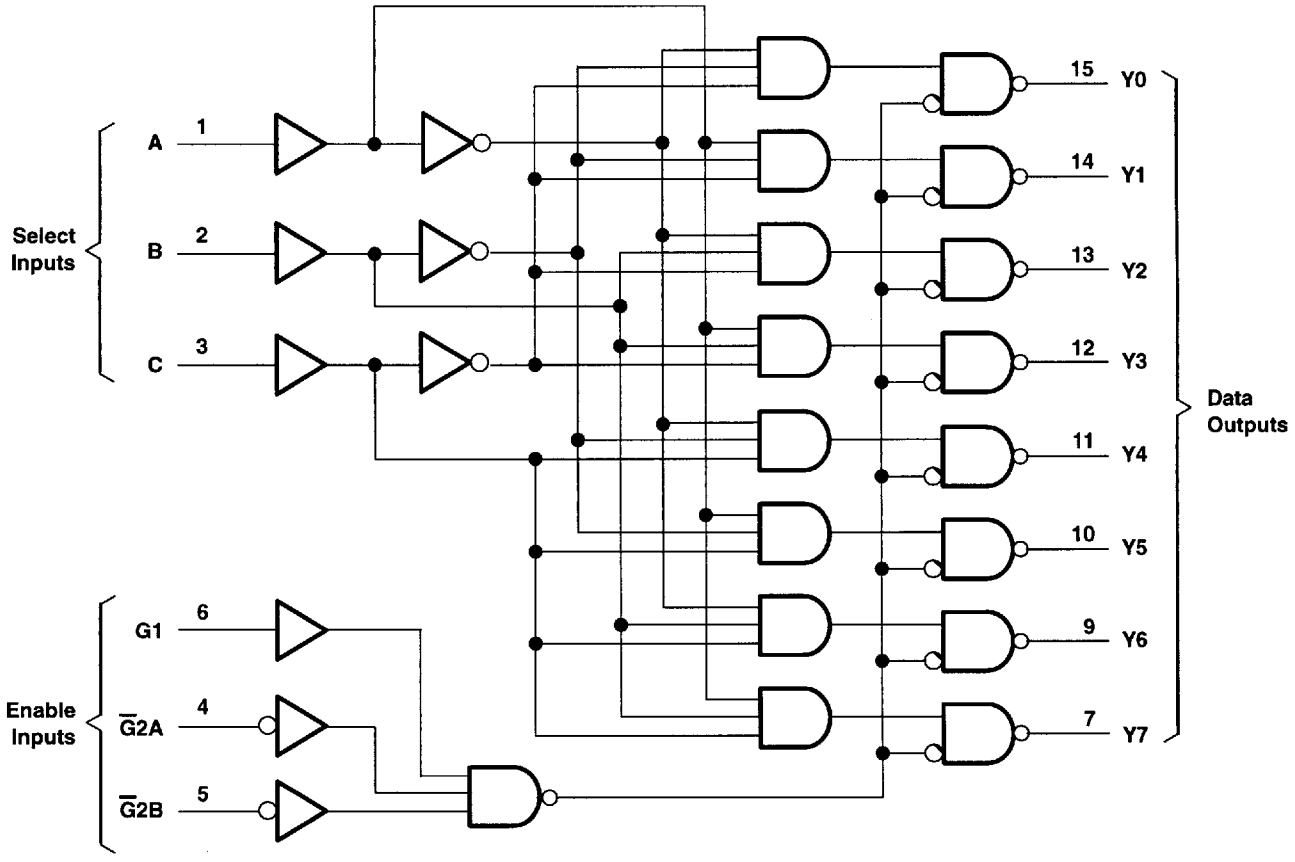


Pin numbers shown are for the D, J, and N packages.



8961723 0106068 937

## absolute maximum ratings over operating free-air temperature range (unless otherwise noted)†

Supply voltage range, $V_{CC}$ ..... −0.5 V to 7 V
Input voltage range, $V_I$ (see Note 1) ..... −1.2 V to 7 V
Input current range ..... −30 mA to 5 mA
Voltage range applied to any output in the high state ..... −0.5 V to $V_{CC}$
Current into any output in the low state ..... 40 mA
Operating free-air temperature range: SN54F138 ..... −55°C to 125°C
SN74F138 ..... 0°C to 70°C
Storage temperature range ..... −65°C to 150°C

† Stresses beyond those listed under "absolute maximum ratings" may cause permanent damage to the device. These are stress ratings only and functional operation of the device at these or any other conditions beyond those indicated under "recommended operating conditions" is not implied. Exposure to absolute-maximum-rated conditions for extended periods may affect device reliability.

NOTE 1: The input voltage ratings may be exceeded provided the input current ratings are observed.

## recommended operating conditions

| | | SN54F138 | | | SN74F138 | | | UNIT |
|---|---|---|---|---|---|---|---|---|
| | | MIN | NOM | MAX | MIN | NOM | MAX | |
| $V_{CC}$ | Supply voltage | 4.5 | 5 | 5.5 | 4.5 | 5 | 5.5 | V |
| $V_{IH}$ | High-level input voltage | 2 | | | 2 | | | V |
| $V_{IL}$ | Low-level input voltage | | | 0.8 | | | 0.8 | V |
| $I_{IK}$ | Input clamp current | | | −18 | | | −18 | mA |
| $I_{OH}$ | High-level output current | | | −1 | | | −1 | mA |
| $I_{OL}$ | Low-level output current | | | 20 | | | 20 | mA |
| $T_A$ | Operating free-air temperature | −55 | | 125 | 0 | | 70 | °C |

## electrical characteristics over recommended operating free-air temperature range (unless otherwise noted)

| PARAMETER | TEST CONDITIONS | | SN54F138 | | | SN74F138 | | | UNIT |
|---|---|---|---|---|---|---|---|---|---|
| | | | MIN | TYP‡ | MAX | MIN | TYP‡ | MAX | |
| $V_{IK}$ | $V_{CC}$ = 4.5 V, | $I_I$ = −18 mA | | | −1.2 | | | −1.2 | V |
| $V_{OH}$ | $V_{CC}$ = 4.5 V, | $I_{OH}$ = −1 mA | 2.5 | 3.4 | | 2.5 | 3.4 | | V |
| | $V_{CC}$ = 4.75 V, | $I_{OH}$ = −1 mA | | | | 2.7 | | | |
| $V_{OL}$ | $V_{CC}$ = 4.5 V, | $I_{OL}$ = 20 mA | | 0.3 | 0.5 | | 0.3 | 0.5 | V |
| $I_I$ | $V_{CC}$ = 5.5 V, | $V_I$ = 7 V | | | 0.1 | | | 0.1 | mA |
| $I_{IH}$ | $V_{CC}$ = 5.5 V, | $V_I$ = 2.7 V | | | 20 | | | 20 | µA |
| $I_{IL}$ | $V_{CC}$ = 5.5 V, | $V_I$ = 0.5 V | | | −0.6 | | | −0.6 | mA |
| $I_{OS}$§ | $V_{CC}$ = 5.5 V, | $V_O$ = 0 | −60 | | −150 | −60 | | −150 | mA |
| $I_{CC}$ | $V_{CC}$ = 5.5 V, | See Note 2 | | 13 | 20 | | 13 | 20 | mA |

‡ All typical values are at $V_{CC}$ = 5 V, $T_A$ = 25°C.

§ Not more than one output should be shorted at a time, and the duration of the short circuit should not exceed one second.

NOTE 2: $I_{CC}$ is measured with outputs enabled and open.



8961723 0106069 873

## switching characteristics (see Note 3)

| PARAMETER | FROM (INPUT) | TO (OUTPUT) | $V_{CC}$ = 5 V, $C_L$ = 50 PF, $R_L$ = 500 Ω, $T_A$ = 25°C | | | $V_{CC}$ = 4.5 V TO 5.5 V, $C_L$ = 50 PF, $R_L$ = 500 Ω, $T_A$ = MIN TO MAX† | | | | UNIT |
|---|---|---|---|---|---|---|---|---|---|---|
| | | | 'F138 | | | SN54F138 | | SN74F138 | | |
| | | | MIN | TYP | MAX | MIN | MAX | MIN | MAX | |
| $t_{PLH}$ | A, B, or C | Y | 2.7 | 5.2 | 7.5 | 2.7 | 12 | 2.7 | 8.5 | ns |
| $t_{PHL}$ | | | 3.2 | 5.7 | 8 | 3.2 | 9.5 | 3.2 | 9 | |
| $t_{PLH}$ | $\overline{G}$2A or $\overline{G}$2B | Y | 2.7 | 5 | 7 | 2.7 | 11 | 2.7 | 8 | ns |
| $t_{PHL}$ | | | 2.2 | 4.9 | 7 | 2.2 | 8 | 2.2 | 7.5 | |
| $t_{PLH}$ | G1 | Y | 3.2 | 5.8 | 8 | 3.2 | 12.5 | 3.2 | 9 | ns |
| $t_{PHL}$ | | | 2.7 | 5.2 | 7.5 | 2.7 | 8.5 | 2.7 | 8.5 | |

† For conditions shown as MIN or MAX, use the appropriate value specified under recommended operating conditions.
NOTE 3: Load circuits and waveforms are shown in Section 1.



8961723 0106070 595