THIS DRAWING CONTAINS INFORMATION PROPRIETARY TO POSITRONIC AND IT'S SUBSIDIARIES. POSITRONIC BELIEVES THE DATA ON THIS DRAWING TO BE RELIABLE, SINCE THE TECHNICAL INFORMATION IS GIVEN FREE OF CHARGE, THE USER EMPLOYS SUCH INFORMATION AT HIS OWN DISCRETION AND RISK. POSITRONIC ASSUMES NO RESPONSIBILITY FOR RESULTS OBTAINED OR DAMAGES INCURRED FROM USE OF SUCH INFORMATION IN WHOLE OR IN PART.

SK12758

DATE	REV	REVISION RECORD	APP	DR	CK
10-25 11	NC	ECO 34631	COLE	BE	COLE
6-10 13	A	ECO 39741	COLE	BE	COLE

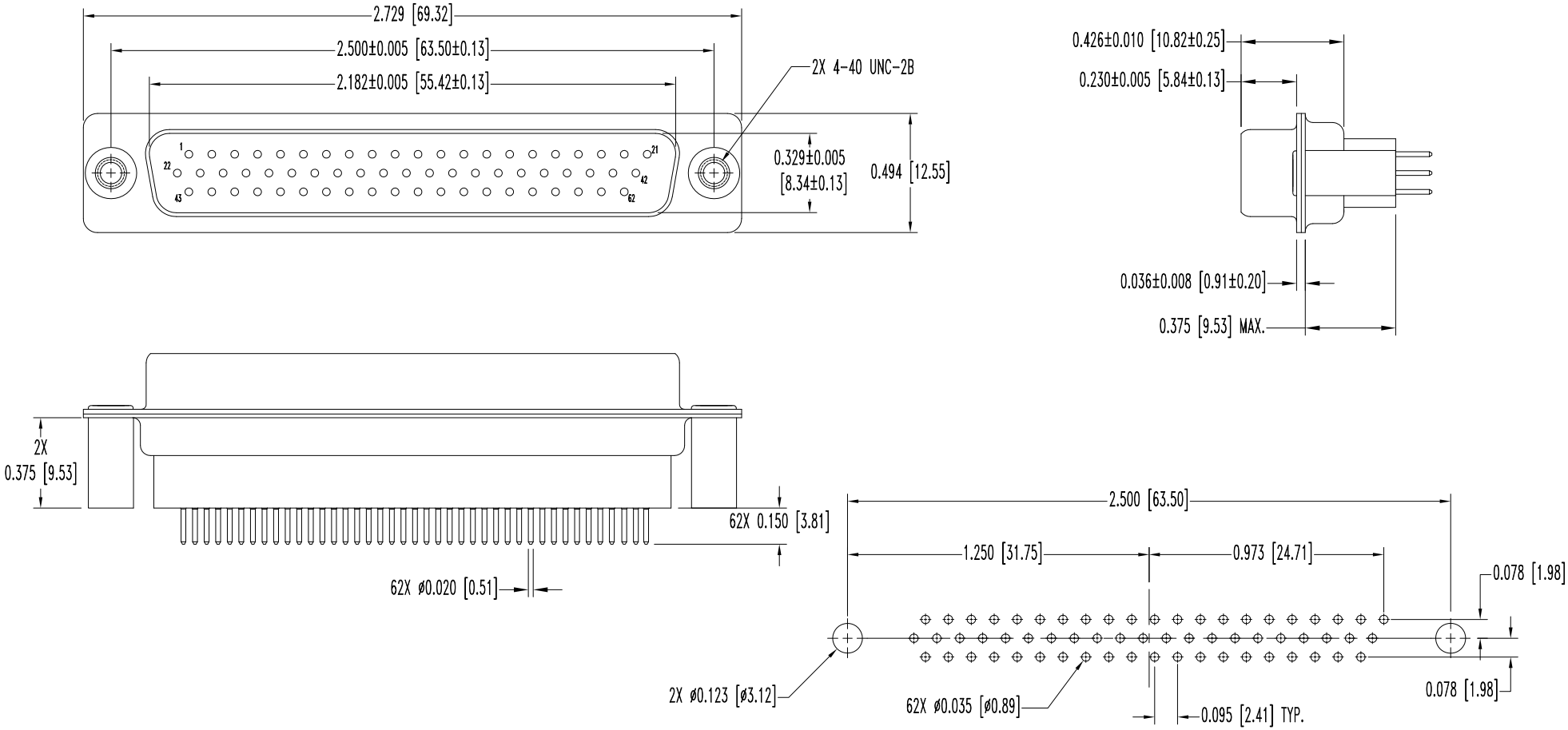

CONTACT HOLE PATTERN

NOTES:

1. MATERIALS AND FINISHES:
   INSULATOR: GLASS FILLED POLYESTER PER ASTM D5927, UL 94V-0, BLUE COLOR.
   CONTACTS: PRECISION MACHINED COPPER ALLOY, GOLD FLASH OVER NICKEL FINISH.
   SHELLS: STEEL, ZINC PLATE WITH CHROMATE SEAL.
   SPACERS: STEEL, ZINC PLATE WITH CHROMATE SEAL.
2. DETAILED PRODUCT, ELECTRICAL, AND MECHANICAL INFORMATION IS AVAILABLE IN THE LATEST HIGH DENSITY D-SUBMINIATURE PRODUCT PUBLICATION. VISIT CONNECTPOSITRONIC.COM/PRODUCTS/59/HIGHDENSITYD-SUBMINIATURE OR CONNECTPOSITRONIC.COM.
3. CONNECTORS ARE COMPLIANT TO THE CURRENT ROHS DIRECTIVE.
4. DIMENSIONS ARE IN INCHES [MILLIMETERS].

POSITRONIC INDUSTRIES INC.
www.connectpositronic.com
FSCM 28198

DECIMAL TOL. ±0.015 [0.38]	DD SERIES	SCALE N.T.S.	DRAWN BY B. EVANS
			APPROVED BY COLE
	TITLE DD62M3S000/AA		
ANGULAR TOL. ±5°	DATE 10-25-11	DRAWING NUMBER SK12758	REV. A