10/100/1000BASE-T SINGLE & DUAL-PORT TRANSFORMER MODULES

Military / Aerospace Grade

Pulse Electronics

- *Compliant with IEEE 802.ab for 1000Base-T*
- *350µH OCL with 8mA bias at extended temperatures*
- *Operating and storage temperature:*
  - ***1000B-5001F/5002F/5003F: -40°C to +85°C***
  - ***1000B-5001FX/5002FX/5003FX: -55°C to +125°C***
- *IC grade transfer-molded package withstands 235°C peak temperature profile RoHS version withstands 245°C*
- ***MSL:*** *3*

Electrical Specifications @ 25°C

Part Number[2]	Insertion Loss (dB Min)	Return Loss (dB Max)				Crosstalk (dB Max)			CM to CM Rejection Ratio (dB Max)			DM to CM Rejection Ratio (dB Max)		
	0.1-100 Mhz	30 Mhz	60 Mhz	80 Mhz	100 Mhz	30 Mhz	60 Mhz	100 Mhz	30 Mhz	60 Mhz	100 Mhz	30 Mhz	60 Mhz	100 Mhz
1000B-5001F	-1.20	-18	-12	-10	-10	-43	-37	-33	-40	-35	-30	-43	-37	-33
1000B-5001FX	-1.40	-18	-12	-10	-8	-43	-37	-33	-40	-35	-30	-43	-37	-33
1000B-5002F	-1.20	-18	-14	-12	-10	-43	-37	-33	-40	-35	-30	-43	-37	-33
1000B-5002FX	-1.20	-18	-14	-12	-10	-43	-37	-33	-40	-35	-30	-43	-37	-33
1000B-5003F	-1.20	-18	-14	-11	-9	-43	-37	-33	-40	-35	-30	-43	-37	-33
1000B-5003FX	-1.20	-18	-14	-11	-9	-43	-37	-33	-40	-35	-30	-43	-37	-33

Note: 1. Add suffix NL for RoHS compliant part; i.e. 1000B-5001F becomes 1000B-5001FNL. **2.** For Tape and Reel Packaging, add "T" suffix at the end of the part number; i.e. 1000B-5001FXT.

Mechanical

1000B-5001F/X

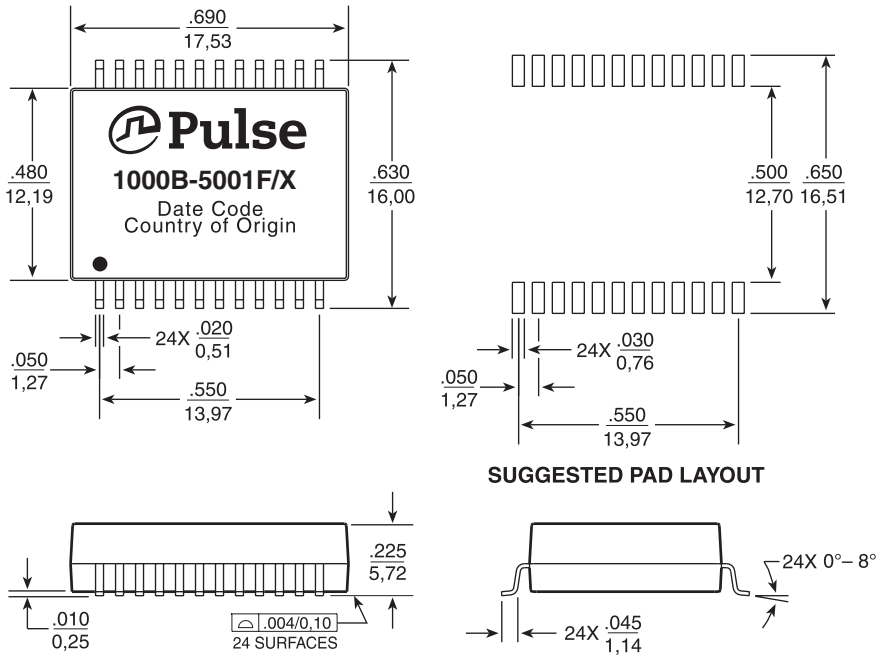

Weight . . . . . 3.0 grams
Tape and Reel 300/reel
Tube 25/tube

Dimensions: Inches / mm
Unless otherwise specified, all tolerances are ± .010 / 0,25

1000B-5002F/X

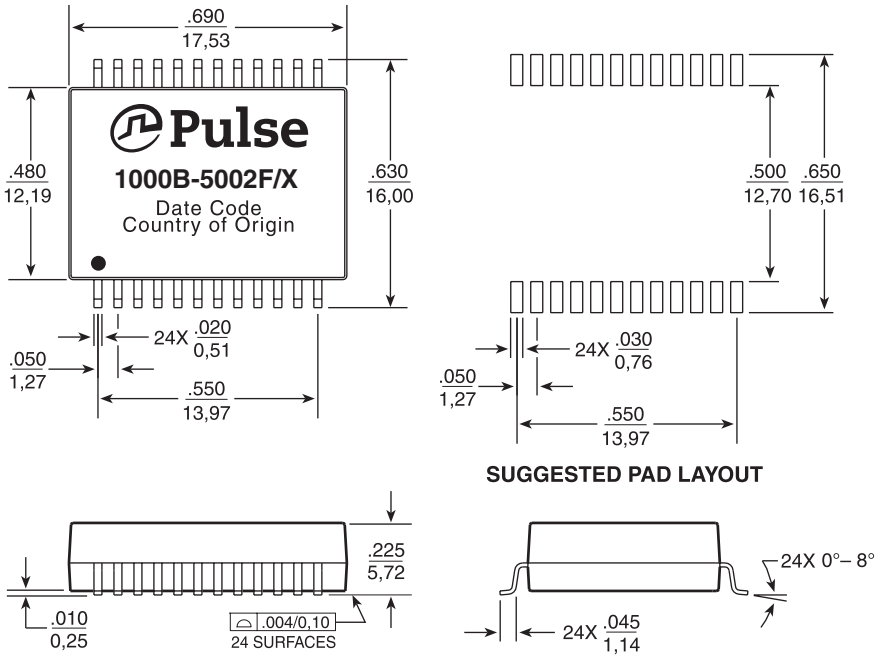

Weight . . . . . 2.6 grams
Tape and Reel 300/reel
Tube 25/tube

Dimensions: Inches / mm
Unless otherwise specified, all tolerances are ± .010 / 0,25

1000B-5003F/X

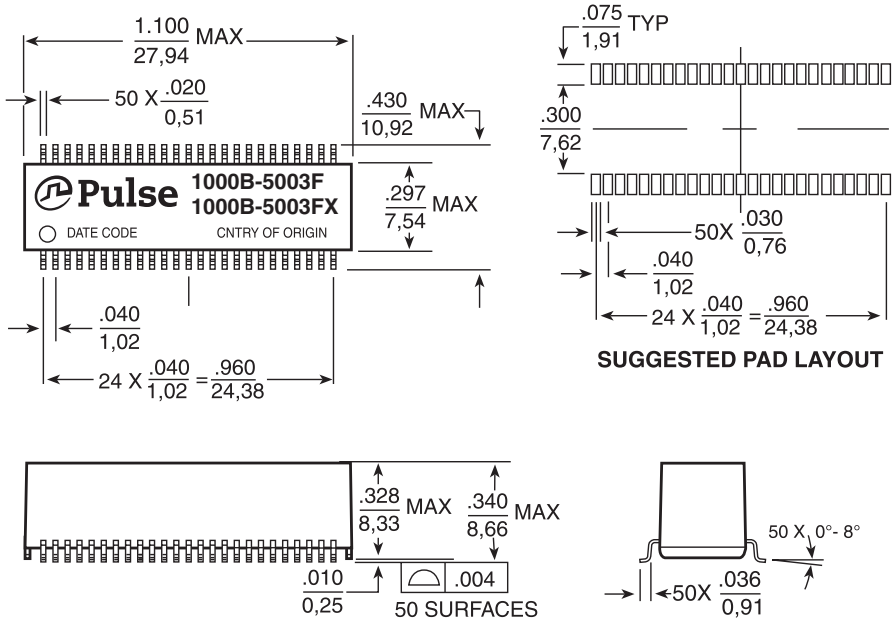

Weight . . . . . 3.5 grams
Tape and Reel 250/reel
Tube 15/tube

Dimensions: Inches / mm
Unless otherwise specified, all tolerances are ± .010 / 0,25

Electrical Schematic

1000B-5001F/X

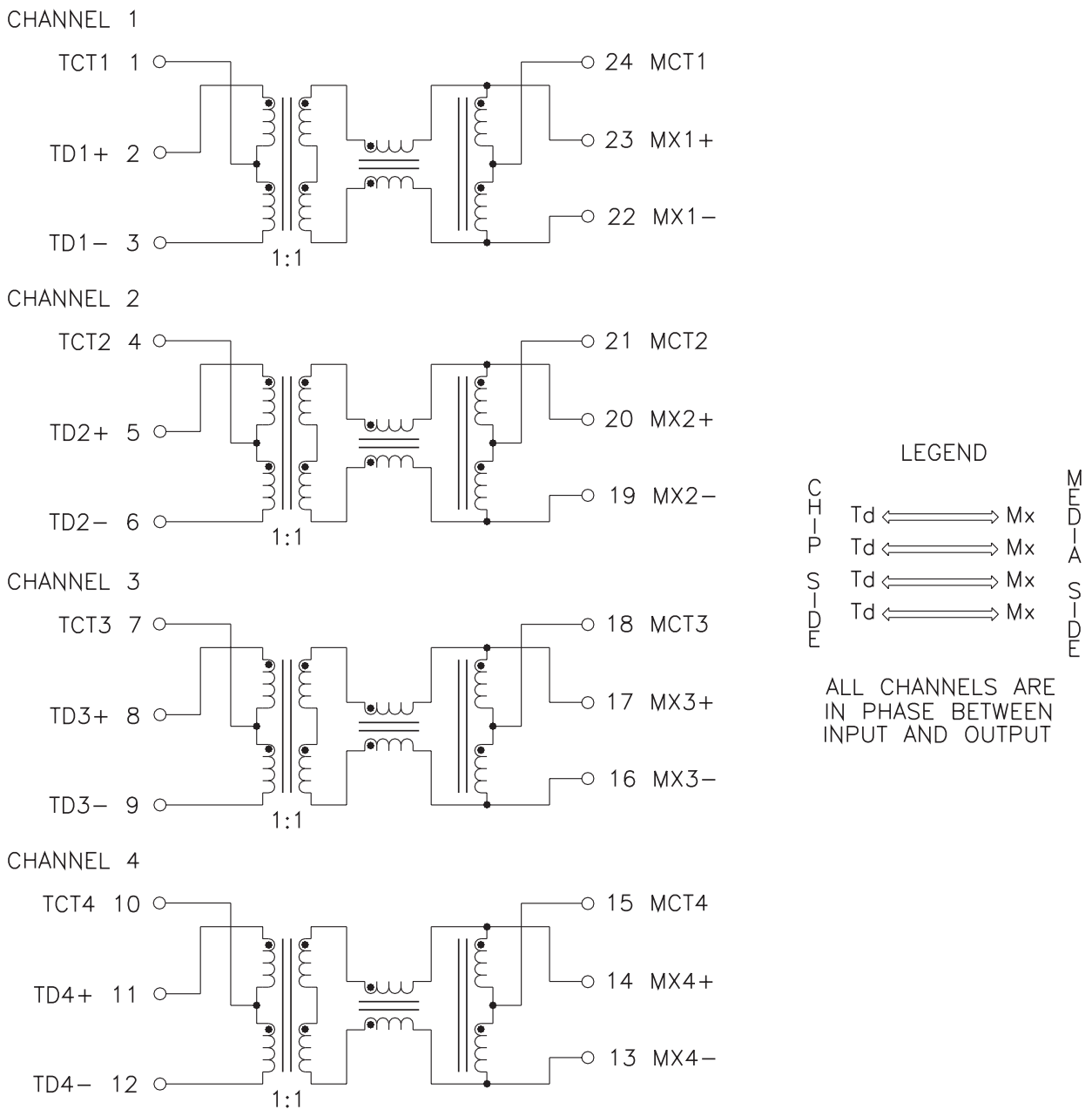

Electrical Schematic

1000B-5002F/X

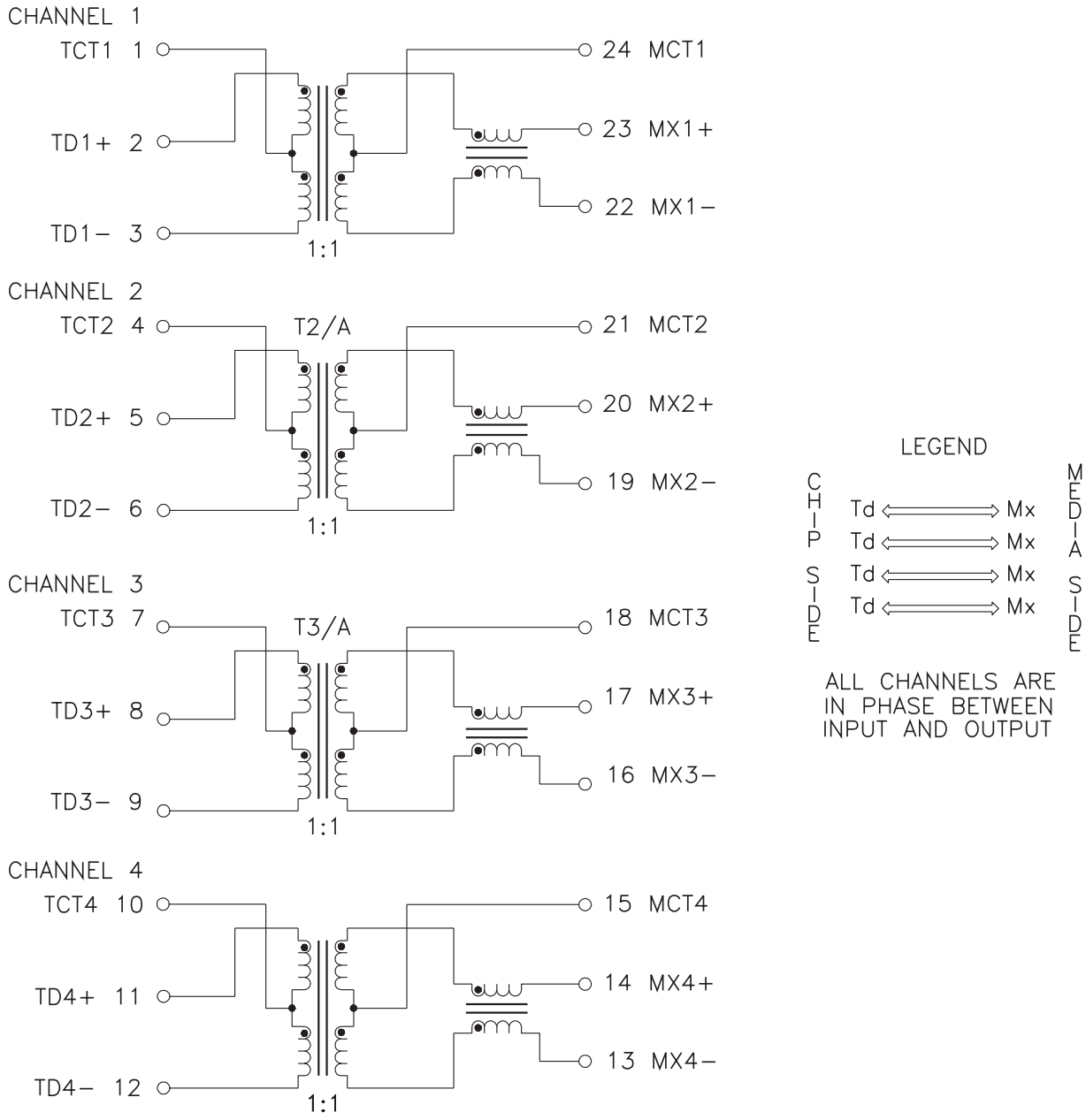

Electrical Schematic

1000B-5003F/X

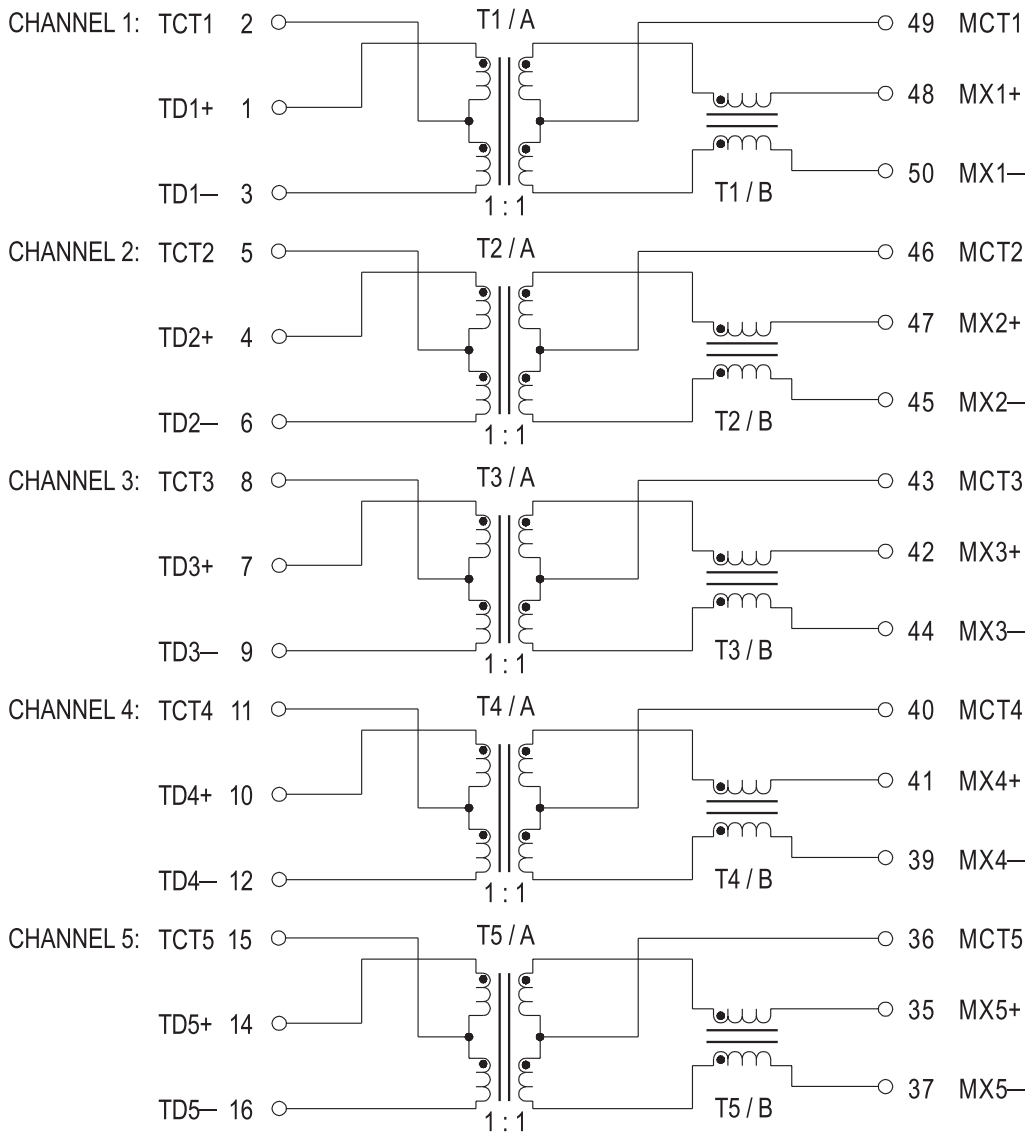

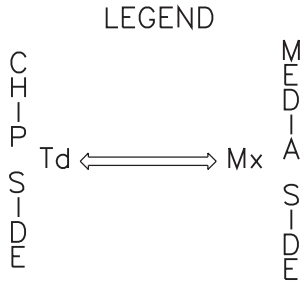

ALL CHANNELS ARE IN PHASE BETWEEN INPUT AND OUTPUT

Continued on next page.

Electrical Schematic

1000B-5003F/X (cont.)

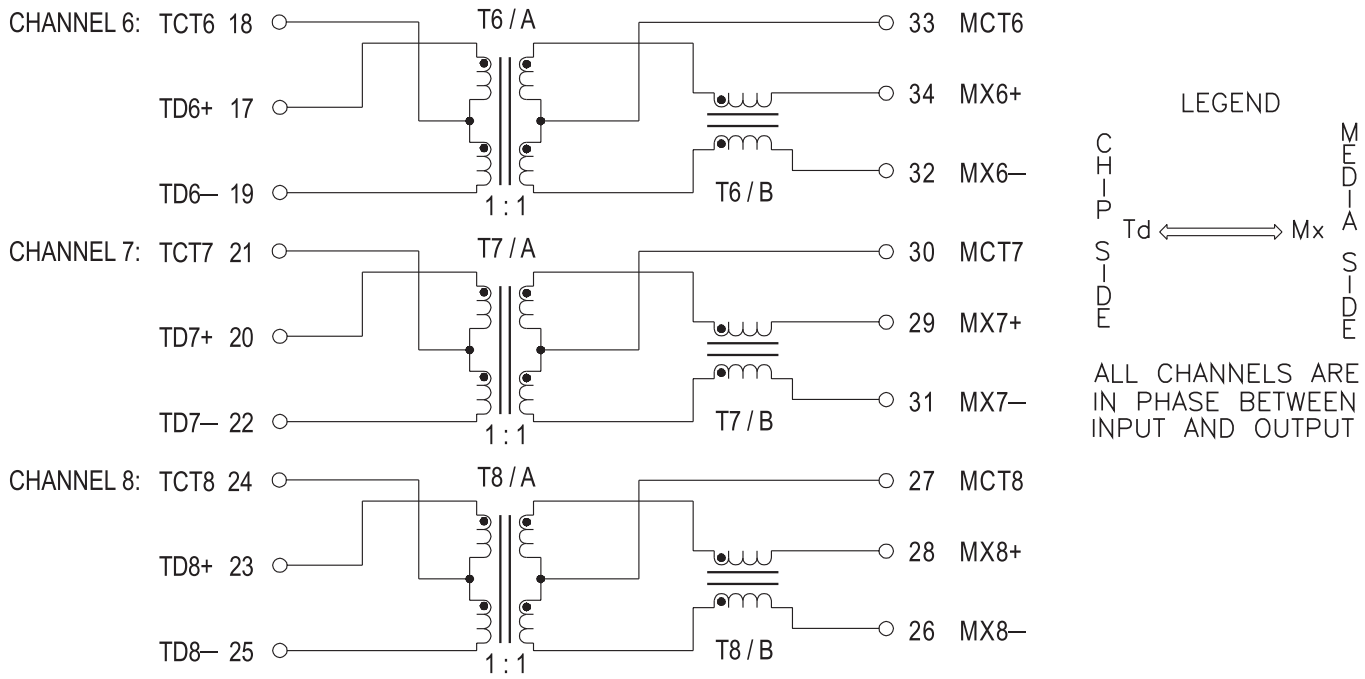

For More Information

Pulse Worldwide Headquarters
Two Pearl Buck Court
Bristol, PA 19007
U.S.A.

Tel: 215 781 6400
Fax: 215 781 6403

Pulse Europe
Einsteinstrasse 1
D-71083 Herrenberg
Germany

Tel: 49 7032 7806 0
Fax: 49 7032 7806 135

Pulse China Headquarters
B402, Shenzhen Academy of
Aerospace Technology Bldg.
10th Kejinan Road
High-Tech Zone
Nanshan District
Shenzen, PR China 518057
Tel: 86 755 33966678
Fax: 86 755 33966700

Pulse North China
Room 2704/2705
Super Ocean Finance Ctr.
2067 Yan An Road West
Shanghai 200336
China

Tel: 86 21 62787060
Fax: 86 2162786973

Pulse South Asia
135 Joo Seng Road
#03-02
PM Industrial Bldg.
Singapore 368363

Tel: 65 6287 8998
Fax: 65 6287 8998

Pulse North Asia
3F, No. 198
Zhongyuan Road
Zhongli City
Taoyuan County 320
Taiwan R. O. C.
Tel: 886 3 4356768
Fax: 886 3 4356823 (Pulse)
Fax: 886 3 4356820 (FRE)

Performance warranty of products offered on this data sheet is limited to the parameters specified. Data is subject to change without notice. Other brand and product names mentioned herein may be trademarks or registered trademarks of their respective owners. © Copyright, 2013. Pulse Electronics, Inc. All rights reserved.