VR5100

Multi-output DC/DC regulator for Low-power LS1 communication processors

Rev. 7.0 — 27 March 2026 Product data sheet

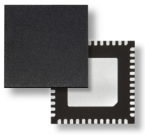

1 General description

The VR5100 is a high performance, highly integrated, multi-output, DC/DC regulator solution, with integrated power MOSFETs, ideally suited for the LS1 family of communications processors. Integrating three buck converters, six linear regulators, RTC supply and a coin-cell charger, the VR5100 can provide power for a complete system, including communications processors, memory, and system peripherals.

1.1 Features

- Three adjustable high efficiency buck regulators: 3.8 A, 1.25 A, 1.5 A
  - Selectable modes: PWM, PFM, APS
- 5.0 V, 600 mA boost regulator with PFM or Auto mode
- Six adjustable general purpose linear regulators
- Input voltage range: 2.8 V to 4.5 V
- OTP (One Time Programmable) memory for device configuration
  - Programmable start-up sequence and timing
  - Selectable output voltage, frequency, soft start
- I^2C control
- Always ON RTC supply and Coin cell charger
- DDR reference voltage
- –40 °C to +125 °C operating junction temperature

2 VR5100 simplified application block diagram

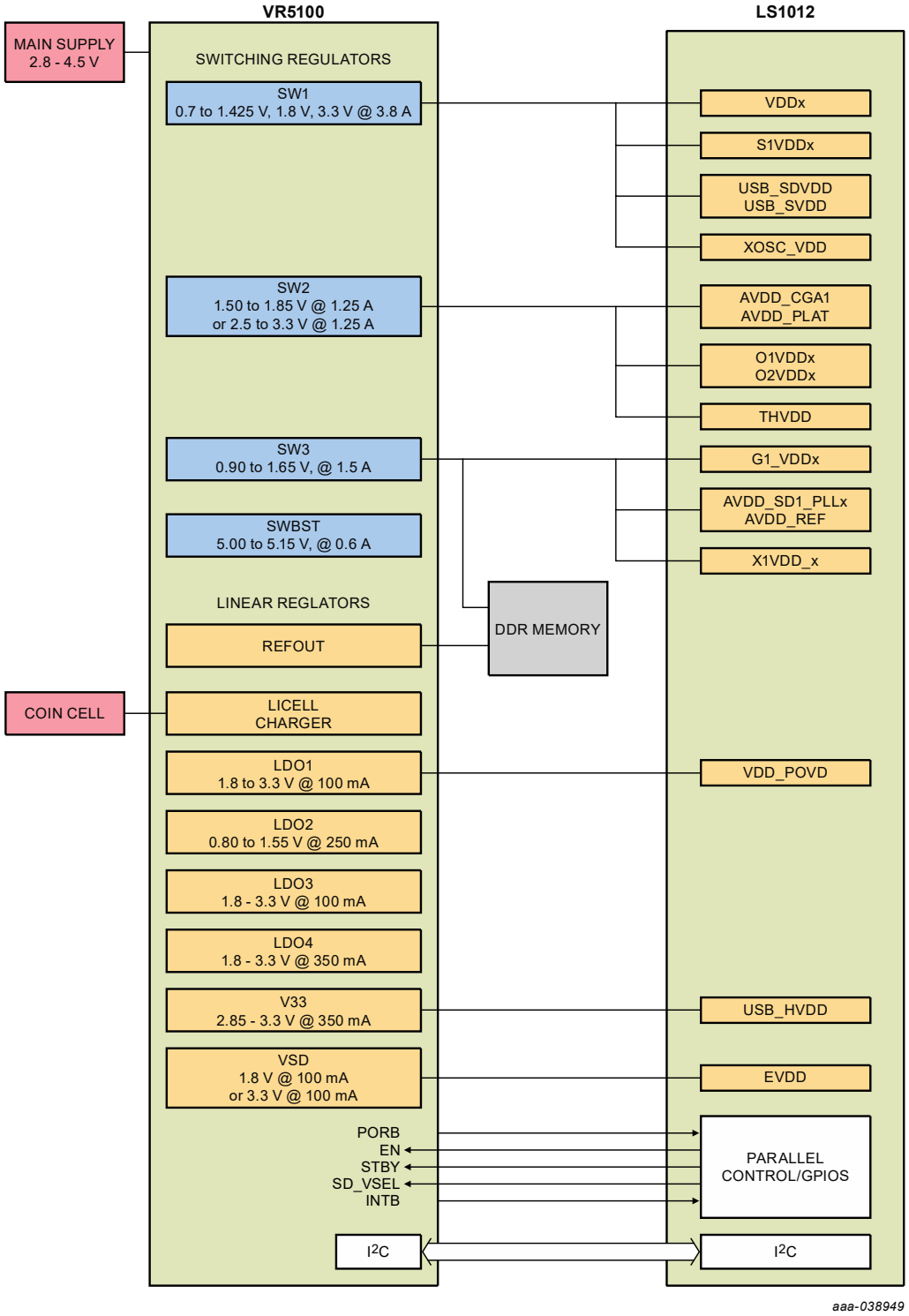

Figure 1. VR5100 simplified application diagram

All information provided in this document is subject to legal disclaimers.

© 2026 NXP B.V. All rights reserved.

3 Orderable parts

The VR5100 is available with pre-programmed OTP memory configurations. The devices are identified using the program codes from Table 1. Details of the OTP programming for each device can be found in Table 37.

Table 1. Orderable part variations

Part Number	Temperature (T_A)	Package	Programming Options	Notes
MC34VR5100A0ES	-40 °C to 105 °C (For use in Industrial applications)	48 QFN 7.0 mm x 7.0 mm	0 - Not programmed	[1]
MC34VR5100A1ES			1 (LS1012 with DDR3L)	
MC34VR5100A2ES			2 (LX2160 with DDR4)	

[1] For tape and reel, add an R2 suffix to the part number

All information provided in this document is subject to legal disclaimers.

© 2026 NXP B.V. All rights reserved.

4 Internal block diagram

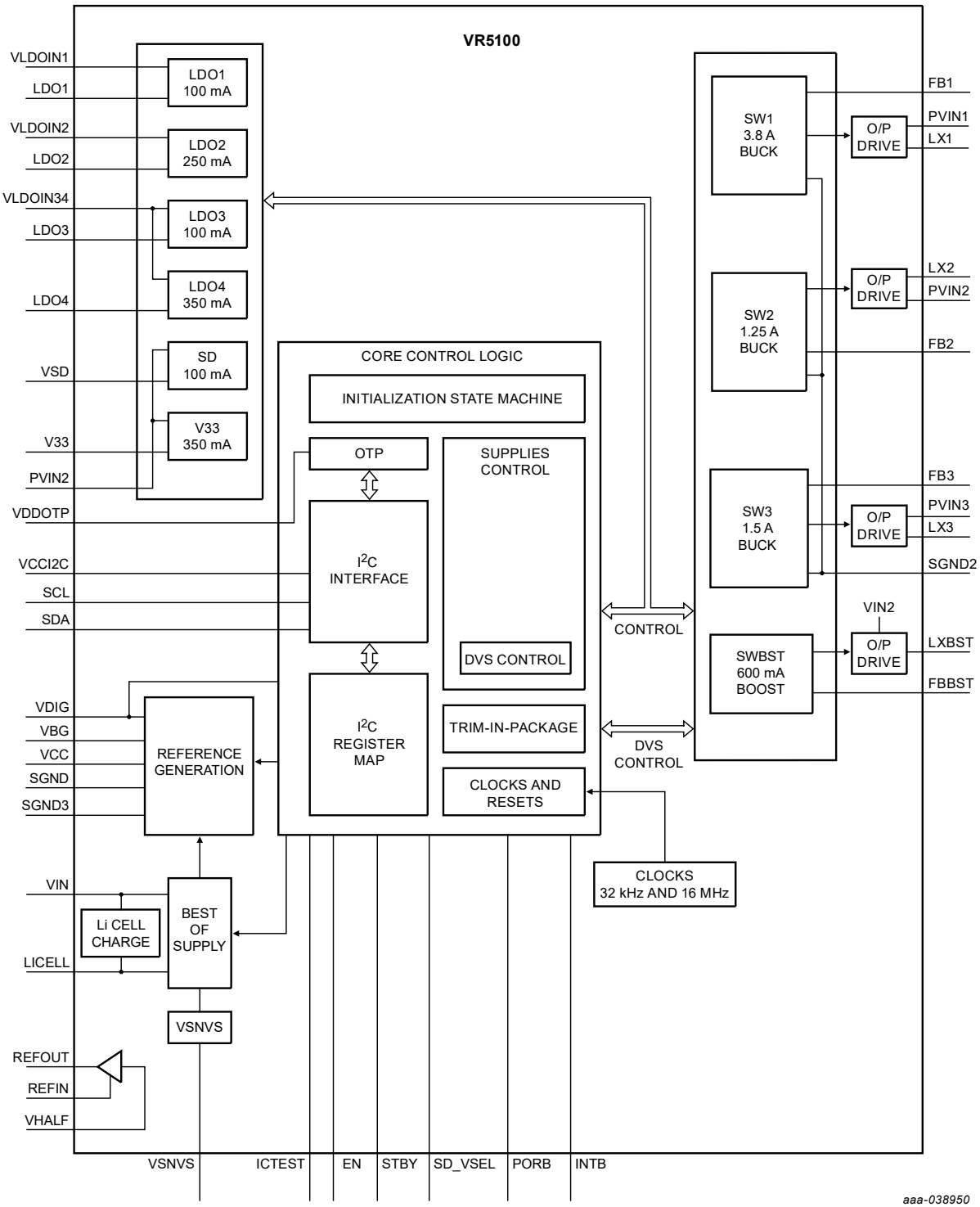

Figure 2. VR5100 simplified internal block diagram

All information provided in this document is subject to legal disclaimers.

© 2026 NXP B.V. All rights reserved.

5 Pin connections

5.1 Pinout diagram

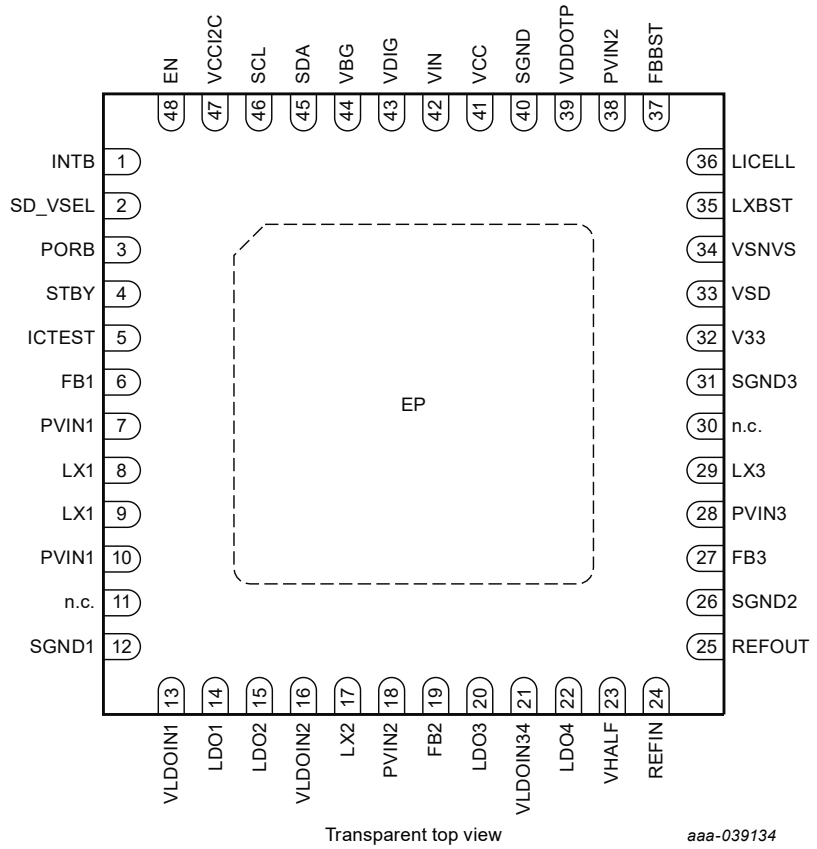

Figure 3. Pinout diagram

5.2 Pin definitions

Table 2. Pin definitions

Pin number	Pin name	Pin function	Type	Definition
—	EP	GND	GND	Expose pad. Functions as ground return for buck and boost regulators. Tie this pad to the inner and external ground planes through vias to allow effective thermal dissipation
1	INTB	O	Digital	Open drain interrupt signal to processor
2	SD_VSEL	I/O	Digital	Input from LS1 processor to select SD regulator voltage • SD_VSEL=0, SD = 3.3 V • SD_VSEL= 1, VSD = 1.8 V
3	PORB	O	Digital	Open drain reset output to processor
4	STBY	I	Digital	Standby input signal from processor
5	ICTEST	I	Digital and Analog	Reserved pin. Connect to GND in application

All information provided in this document is subject to legal disclaimers.

© 2026 NXP B.V. All rights reserved.

Table 2. Pin definitions*...continued*

Pin number	Pin name	Pin function	Type	Definition
6	FB1	I	Analog	SW1 output voltage feedback pin. Route this trace separately from the high current path and terminate at the output capacitance or near the load, if possible for best regulation
7	PVIN1	I	Analog	Input to SW1 regulator. Bypass with at least a 4.7 µF ceramic capacitor and a 0.1 µF decoupling capacitor as close to the pin as possible
8, 9	LX1	O	Analog	Switcher 1 switch node connection. Connect to SW1 inductor
10	PVIN1	I	Analog	Input to SW1 regulator. Bypass with at least a 4.7 µF ceramic capacitor and a 0.1 µF decoupling capacitor as close to the pin as possible
11, 30	NC	—	—	Leave this pin floating
12	SGND1	GND	GND	Ground reference for SW1. Connect to GND. Keep away from high current ground return paths
13	VLDOIN1	I	Analog	LDO1 input supply. Bypass with a 1.0 µF decoupling capacitor as close to the pin as possible
14	LDO1	O	Analog	LDO1 regulator output. Bypass with a 2.2 µF ceramic output capacitor
15	LDO2	O	Analog	LDO2 regulator output. Bypass with a 4.7 µF ceramic output capacitor
16	VLDOIN2	I	Analog	LDO2 input supply. Bypass with a 1.0 µF decoupling capacitor as close to the pin as possible
17	LX2 [1]	O	Analog	Switcher 2 switch node connection. Connect to SW2 inductor
18	PVIN2 [1]	I	Analog	Input to SW2 regulator. Bypass with at least a 4.7 µF ceramic capacitor and a 0.1 µF decoupling capacitor as close to the pin as possible
19	FB2 [1]	I	Analog	SW2 output voltage feedback pin. Route this trace separately from the high current path and terminate at the output capacitor or near the load, if possible for best regulation
20	LDO3	O	Analog	LDO3 regulator output. Bypass with a 2.2 µF ceramic output capacitor
21	VLDOIN34	I	Analog	LDO3 and LDO4 input supply. Bypass with a 1.0 µF decoupling capacitor as close to the pin as possible
22	LDO4	O	Analog	LDO4 regulator output. Bypass with a 2.2 µF ceramic output capacitor
23	VHALF	I	Analog	Half supply reference for REFOUT. Bypass with 0.1 µF to ground.
24	REFIN	I	Analog	REFOUT regulator input. Connect a 0.1 µF capacitor between REFIN and VHALF pin. Ensure there is at least 1.0 µF net capacitance from REFIN to ground
25	REFOUT	O	Analog	REFOUT regulator output. Bypass with 1.0 µF to ground
26	SGND2	GND	GND	Reference ground for SW2 and SW3 regulators. Connect to GND. Keep away from high current ground return paths
27	FB3 [1]	I	Analog	SW3 output voltage feedback pin. Route this trace separately from the high current path and terminate at the output capacitor or near the load, if possible for best regulation
28	PVIN3 [1]	I	Analog	Input to SW3 regulator. Bypass with at least a 4.7 µF ceramic capacitor and a 0.1 µF decoupling capacitor as close to the pin as possible

All information provided in this document is subject to legal disclaimers.

© 2026 NXP B.V. All rights reserved.

Table 2. Pin definitions*...continued*

Pin number	Pin name	Pin function	Type	Definition
29	LX3 [1]	O	Analog	Switcher 3 switch node connection. Connect the SW3 inductor
31	SGND3	GND	GND	Connect to GND.
32	V33	O	Analog	V33 regulator output. Bypass with a 4.7 µF ceramic output capacitor
33	VSD	O	Analog	Output of VSD regulator. Bypass with a 2.2 µF ceramic output capacitor.
34	VSNVS	O	Analog	VSNVS regulator/switch output. Bypass with 0.47 µF capacitor to ground.
35	LXBST [1]	I/O	Analog	SWBST switch node connection. Connect to SWBST inductor and anode of Schottky diode
36	LICELL	I/O	Analog	Coin cell supply input/output. Bypass with 0.1 µF capacitor. Connect to optional coin cell
37	FBBST [1]	I	Analog	SWBST output voltage feedback pin. Route this trace separately from the high current path and terminate at the output capacitor
38	PVIN2	I	Analog	Input to SD, V33 regulators and SWBST control circuitry. Connect to VIN rail and bypass with 10 µF capacitor
39	VDDOTP	I	Digital & Analog	Supply to program OTP fuses. Connect VDDOTP to GND during normal application
40	SGND	GND	GND	Ground reference for IC core circuitry. Connect to ground. Keep away from high current ground return paths
41	VCC	O	Analog	Internal analog core supply. Bypass with 1 µF capacitor to ground
42	VIN	I	Analog	Main IC supply. Bypass with 1.0 µF capacitor to ground. Connect to system input supply.
43	VDIG	O	Analog	Internal digital core supply. Bypass with 1.0 µF capacitor to ground
44	VBG	O	Analog	Main band gap reference. Bypass with 220 nF capacitor to ground
45	SDA	I/O	Digital	I^2C data line (open drain). Pull up to VCCI2C with a 4.7 kΩ resistor
46	SCL	I	Digital	I^2C clock. Pull up to VCCI2C with a 4.7 kΩ resistor
47	VCCI2C	I	Analog	Supply for I^2C bus. Bypass with 0.1 µF ceramic capacitor. Connect to 1.7 to 3.6 V supply. Ensure VCCI2C is always lesser than or equal to VIN
48	EN	I	Digital	Power ON/OFF input from processor

[1] Unused switching regulators should be connected as follows: Pins SWxLX and SWxFB should be unconnected and Pin SWxIN should be connected to VIN with a 0.1 µF bypass capacitor.

All information provided in this document is subject to legal disclaimers.

© 2026 NXP B.V. All rights reserved.

6 General product characteristics

6.1 Absolute maximum ratings

Table 3. Absolute maximum voltage ratings

All voltages are with respect to ground, unless otherwise noted. Exceeding these ratings may cause malfunction or permanent damage to the device. The detailed maximum voltage rating per pin can be found in the pin list section.

Symbol	Description	Value	Unit	Notes
Electrical ratings				
ICTEST, LXBST	—	-0.3 to 7.5	V	
VIN, PVIN2, VLDOIN1, PVIN1, PVIN2, PVIN3, LX1, LX2, LX3	—	-0.3 to 4.8	V	
VDDOTP	OTP programming input supply voltage	-0.3 to 10.0	V	[1]
FBBST	Boost switcher feedback	-0.3 to 5.5	V	
INTB, SD_VSEL, PORB, STBY, FB1, FB2, FB3, LDO1, VLDOIN2, VLDOIN34, LDO3, LDO4, VHALF, REFIN, REFOUT, V33, VSD, VSNVS, LICELL, VCC, SDA, SCL, VCCI2C, EN	—	-0.3 to 3.6	V	
LDO2	LDO2 linear regulator output	-0.3 to 2.5	V	
VDIG	Digital core supply voltage output	-0.3 to 1.65	V	
VBG	Bandgap reference voltage output	-0.3 to 1.5	V	
V_{ESD}	ESD ratings • Human body model • Charge device model	±2000 ±500	V	[2]

[1] 10 V Maximum voltage rating during OTP fuse programming. 7.5 V Maximum DC voltage rated otherwise.
[2] ESD testing is performed in accordance with the Human Body Model (HBM) (CZAP = 100 pF, RZAP = 1500 Ω), and the Charge device model (CDM), Robotic (CZAP = 4.0 pF)

6.2 Thermal characteristics

Table 4. Thermal ratings

Symbol	Description (Rating)	Min	Max	Unit	Notes
Thermal ratings					
T_A	Ambient operating temperature range • Industrial version	-40	105	°C	
T_J	Operating junction temperature range	-40	125	°C	[1]
T_{ST}	Storage temperature range	-65	150	°C	
T_{PPRT}	Peak package reflow temperature	—	[2]	°C	[3] [2]
QFN48 thermal resistance and package dissipation ratings					
$R_{\theta JA}$	Junction to ambient, natural convection • Four layer board (2s2p) • Eight layer board (2s6p)	— —	24 15	°C/W	[4] [5] [6]
$R_{\theta JB}$	Junction to board	—	11	°C/W	[7]

All information provided in this document is subject to legal disclaimers.

© 2026 NXP B.V. All rights reserved.

Table 4. Thermal ratings...*continued*

Symbol	Description (Rating)	Min	Max	Unit	Notes
$R_{\Theta JCBOTTOM}$	Junction to case bottom	—	1.4	°C/W	[8]
ΨJT	Junction to package top • Natural convection	—	1.3	°C/W	[9]

[1] Do not operate beyond 125 °C for extended periods of time. Operation above 150 °C may cause permanent damage to the IC. See Thermal Protection Thresholds for thermal protection features
[2] NXP's package reflow capability meets Pb-free requirements for JEDEC standard J-STD-020C. For peak package reflow temperature and moisture sensitivity levels (MSL), go to www.nxp.com, search by part number (remove prefixes/ suffixes) and enter the core ID to view all orderable parts, and review parametrics.
[3] Pin soldering temperature limit is for 10 seconds maximum duration. Not designed for immersion soldering. Exceeding these limits may cause a malfunction or permanent damage to the device
[4] Junction temperature is a function of die size, on-chip power dissipation, package thermal resistance, mounting site (board) temperature, ambient temperature, air flow, power dissipation of other components on the board, and board thermal resistance
[5] The Board uses the JEDEC specifications for thermal testing (and simulation) JESD51-7 and JESD51-5
[6] Per JEDEC JESD51-6 with the board horizontal
[7] Thermal resistance between the die and the printed circuit board per JEDEC JESD51-8. Board temperature is measured on the top surface of the board near the package
[8] Thermal resistance between the die and the case top surface as measured by the cold plate method (MIL SPEC-883 Method 1012.1)
[9] Thermal characterization parameter indicating the temperature difference between package top and the junction temperature per JEDEC JESD51-2. When Greek letters (ΨJT) are not available, the thermal characterization parameter is written as Psi-JT

6.3 Current consumption

The current consumption of the individual blocks is described in detail in the following table.

Table 5. Current consumption summary

T_A= -40 °C to 105 °C, V_{IN} = 3.6 V, V_{CCI2C} = 1.7 V to 3.6 V, L_{ICELL} = 1.8 V to 3.3 V, V_{SNVS} = 3.0 V, typical external component values, unless otherwise noted. Typical values are characterized at VIN = 3.6 V, V_{CCI2C} = 3.3 V, L_{ICELL} = 3.0 V, V_{SNVS} = 3.0 V and 25 °C, unless otherwise noted.

Mode	VR5100 Conditions	System Conditions	Typ.	Max.	Unit	Notes
Coin Cell	VSNVS from LICELL, All other blocks off, VIN = 0.0 V	No load on VSNVS	4.0	7.0	µA	[1] [2]
Off	VSNVS from VIN or LICELL Wake-up from EN active 32 kHz RC on All other blocks off VIN ≥ UVDET	No load on VSNVS, PMIC able to wake-up	16	25	µA	[1] [2]
Sleep LPSR	VSNVS from VIN Wake-up from EN active Trimmed reference active SW3 PFM. All other regulators off. Trimmed 16 MHz RC off 32 kHz RC on REFOUT disabled	No load on any of the regulators	130 [1] 200 [3]	220 [1]	µA	[4]
	LDO1 & LDO3 activated in addition to SW3	No load on any of the regulators	170 [1] 260 [3]	248 [1]	µA	[4]
Standby	VSNVS from either VIN or LICELL SW1 in PFM SW2 in PFM SW3 in PFM	No load on any of the regulators	297	450	µA	[4]

All information provided in this document is subject to legal disclaimers.

© 2026 NXP B.V. All rights reserved.

Table 5. Current consumption summary*...continued*

T_A= -40 °C to 105 °C, V_{IN} = 3.6 V, V_{CCI2C} = 1.7 V to 3.6 V, L_{ICELL} = 1.8 V to 3.3 V, V_{SNVS} = 3.0 V, typical external component values, unless otherwise noted. Typical values are characterized at VIN = 3.6 V, V_{CCI2C} = 3.3 V, L_{ICELL} = 3.0 V, V_{SNVS} = 3.0 V and 25 °C, unless otherwise noted.

Mode	VR5100 Conditions	System Conditions	Typ.	Max.	Unit	Notes
	SWBST off Trimmed 16 MHz RC enabled Trimmed reference active LDO1-4 enabled V33 enabled VSD enabled REFOUT enabled					
ON	VSNVS from VIN SW1 in APS SW2 in APS SW3 in APS SWBST off Trimmed 16 MHz RC enabled Trimmed reference active LDO1-4 enabled V33 enabled VSD enabled REFOUT enabled	No load on any of the regulators	1.2		mA	

[1] At 25 °C only
[2] When V_{IN} is below the UVDET threshold, in the range of 1.8 V ≤ V_{IN} < 2.65 V, the quiescent current increases by 50 µA, typically
[3] At 105 °C only
[4] For PFM operation, headroom should be 300 mV or greater

6.4 Electrical characteristics

Table 6. Static electrical characteristics – SW1

All parameters are specified at T_A = -40 °C to 105 °C, V_{IN} = V_{PVIN1} = 3.6 V, V_{SW1} = 1.2 V, I_{SW1} = 100 mA, typical external component values, f_{SW1} = 2.0 MHz, unless otherwise noted. Typical values are characterized at V_{IN} = V_{PVIN1} = 3.6 V, V_{SW1} = 1.2 V,

I_{SW1} = 100 mA, and 25 °C, unless otherwise noted.

Symbol	Parameter	Min.	Typ.	Max.	Unit	Notes
Switch mode supply SW1						
V_{PVIN1}	Operating input voltage	2.8	—	4.5	V	[1]
V_{SW1}	Nominal output voltage	—	Table 46	—	V	
V_{SW1ACC}	Output voltage accuracy • PWM, APS, 2.8 V < V_{PVIN1} < 4.5 V, 0 < I_{SW1} < 3.8 A 0.7 V ≤ V_{SW1} ≤ 1.2 V • PFM, APS, 2.8 V < V_{PVIN1} < 4.5 V, 0 < I_{SW1} < 3.8 A 1.225 V < V_{SW1} < 1.425 V • PFM, steady state, 2.8 V < V_{PVIN1} < 4.5 V, 0 < I_{SW1} < 150 mA 1.8 V ≤ V_{SW1} ≤ 1.425 V • PWM, APS, 2.8 V < V_{PVIN1} < 4.5 V, 0 < I_{SW1} < 2.75A 1.8 V < V_{SW1} < 3.3 V	 -25 -25 -45 -6.0 -6.0	 — 	 25 35 45 6.0 6.0	 mV mV mV % %	

All information provided in this document is subject to legal disclaimers.

© 2026 NXP B.V. All rights reserved.

Table 6. Static electrical characteristics – SW1*...continued*

All parameters are specified at T_A = -40 °C to 105 °C, V_{IN} = V_{PVIN1} = 3.6 V, V_{SW1} = 1.2 V, I_{SW1} = 100 mA, typical external component values, f_{SW1} = 2.0 MHz, unless otherwise noted. Typical values are characterized at V_{IN} = V_{PVIN1} = 3.6 V, V_{SW1} = 1.2 V,

I_{SW1} = 100 mA, and 25 °C, unless otherwise noted.

Symbol	Parameter	Min.	Typ.	Max.	Unit	Notes
	• PFM, steady state, 2.8 V < V_{PVIN1} < 4.5 V, 0 < I_{SW1} < 150 mA 1.8 V ≤ V_{SW1} ≤ 3.3 V					
I_{SW1}	Rated output load current, • 2.8 V ≤ V_{PVIN1} ≤ 4.5 V, 0.7 V < V_{SW1} < 1.425 V, 1.8V, 3.3V	3800	—	—	mA	
I_{SW1Q}	Quiescent current • PFM Mode • APS Mode	— —	22 300	— —	µA	
I_{SW1LIM}	Current limiter peak current detection , current through inductor • SW1ILIM = 0 • SW1ILIM = 1	4 2.6	5.5 4.0	8.0 5.4	A	
ΔV_{SW1}	Output ripple	—	5.0	—	mV	
R_{SW1DIS}	Discharge resistance	—	600	—	Ω	
Switch mode supply SW1						
V_{SW1OSH}	Start-up overshoot, I_{SW1} = 0 mA, DVS clk = 25 mV/4 µs, V_{IN} = V_{PVIN1} = 4.5 V, V_{SW1} = 1.425 V	—	—	66	mV	
t_{ONSW1}	Turn-on time, enable to 90% of end value, I_{SW1} = 0 mA, DVS clk = 25 mV/4 µs, V_{IN} = V_{PVIN1} = 4.5 V, V_{SW1} = 1.425 V	—	—	500	µs	

[1] Minimum operating voltage is 2.8 V with a valid LICELL voltage (1.8 V to 3.3 V). Minimum operating voltage is 3.1 V when no voltage is applied at the LICELL pin. If operation down to 2.8 V is required for systems without a coin cell, connect the LICELL pin to any system voltage between 1.8 V and 3.3 V. This voltage can be an output from any VR5100 regulator or external system supply.

Table 7. Static electrical characteristics – SW2

All parameters are specified at T_A = -40 °C to 105 °C, V_{IN} = V_{PVIN2} = 3.6 V, V_{SW2} = 3.15 V, I_{SW2} = 100 mA, typical external component values, f_{SW2} = 2.0 MHz, unless otherwise noted. Typical values are characterized at V_{IN} = V_{PVIN2} = 3.6 V, V_{SW2} = 3.15 V, I_{SW2} = 100 mA, and 25 °C, unless otherwise noted.

Symbol	Parameter	Min.	Typ.	Max.	Unit	Notes
Switch mode supply SW2						
V_{PVIN2}	Operating input voltage	2.8	—	4.5	V	[1]
V_{SW2}	Nominal output voltage	—	Table 48	—	V	
V_{SW2ACC}	Output voltage accuracy • PWM, APS, 2.8 V ≤ V_{PVIN2} ≤ 4.5 V, 0 ≤ I_{SW2} ≤ 1.25 A • 1.50 V ≤ V_{SW2} ≤ 1.85 V • 2.5 V ≤ V_{SW2} ≤ 3.3 V • PFM, 2.8 V ≤ V_{PVIN2} ≤ 4.5 V, 0 ≤ I_{SW2} ≤ 50 mA • 1.50 V ≤ V_{SW2} ≤ 1.85 V • 2.5 V ≤ V_{SW2} ≤ 3.3 V	-3.0% -6.0% -6.0% -6.0%	— — — —	3.0% 6.0% 6.0% 6.0%	%	

All information provided in this document is subject to legal disclaimers.

© 2026 NXP B.V. All rights reserved.

Table 7. Static electrical characteristics – SW2*...continued*

All parameters are specified at T_A = -40 °C to 105 °C, V_{IN} = V_{PVIN2} = 3.6 V, V_{SW2} = 3.15 V, I_{SW2} = 100 mA, typical external component values, f_{SW2} = 2.0 MHz, unless otherwise noted. Typical values are characterized at V_{IN} = V_{PVIN2} = 3.6 V, V_{SW2} = 3.15 V, I_{SW2} = 100 mA, and 25 °C, unless otherwise noted.

Symbol	Parameter	Min.	Typ.	Max.	Unit	Notes
I_{SW2}	Rated output load current, 2.8 V < V_{PVIN2} < 4.5 V, 1.50 V < V_{SW2} < 1.85 V, 2.5 V < V_{SW2} < 3.3 V	1250	—	—	mA	[2]
I_{SW2Q}	Quiescent current • PFM mode • APS mode (Low output voltage settings) • APS mode (High output voltage settings, SW2_HI=1)	— — —	23 145 305	— — —	µA	
I_{SW2LIM}	Current limiter peak current detection, current through inductor • SW2ILIM = 0 • SW2ILIM = 1	1.625 1.235	2.5 1.9	3.375 2.565	A	
ΔV_{SW2}	Output ripple	—	5.0	—	mV	
R_{ONSW2P}	SW2 P-MOSFET $R_{DS(on)}$ at V_{IN} = V_{PVIN2} = 3.3 V	—	215	245	mΩ	
R_{ONSW2N}	SW2 N-MOSFET $R_{DS(on)}$ at V_{IN} = V_{PVIN2} = 3.3 V	—	258	326	mΩ	
I_{SW2PQ}	SW2 P-MOSFET leakage current, V_{IN} = V_{PVIN2} = 4.5 V	—	—	10.5	µA	
I_{SW2NQ}	SW2 N-MOSFET leakage current, V_{IN} = V_{PVIN2} = 4.5 V	—	—	3.0	µA	
R_{SW2DIS}	Discharge resistance during OFF mode	—	600	—	Ω	
V_{SW2OSH}	Start-up overshoot, I_{SW2} = 0.0 mA, DVS clk = 25 mV/4 µs, V_{IN} = V_{PVIN2} = 4.5 V	—	—	66	mV	
t_{ONSW2}	Turn-on time, enable to 90% of end value, I_{SW2} = 0.0 mA, DVS clk = 25 mV/4 µs, V_{IN} = V_{PVIN2} = 4.5 V	—	—	500	µs	

[1] Minimum operating voltage is 2.8 V with a valid LICELL voltage (1.8 V to 3.3 V). Minimum operating voltage is 3.1 V when no voltage is applied at the LICELL pin. If operation down to 2.8 V is required for systems without a coin cell, connect the LICELL pin to any system voltage between 1.8 V and 3.3 V. This voltage can be an output from any VR5100 regulator or external system supply.

[2] The higher output voltages available depend on the voltage drop in the conduction path as given by the following equation: (V_{PVIN2} - V_{SW2}) = I_{SW2}* (DCR of Inductor + R_{ONSW2P} + PCB trace resistance).

Table 8. Static electrical characteristics – SW3

All parameters are specified at T_A = -40 °C to 105 °C, V_{IN} = V_{PVIN3} = 3.6 V, V_{SW3} = 1.5 V, I_{SW3} = 100 mA, typical external component values, f_{SW3} = 2.0 MHz. Typical values are characterized at V_{IN} = V_{PVIN3} = 3.6 V, V_{SW3} = 1.5 V, I_{SW3} = 100 mA, and 25 °C, unless otherwise noted.

Symbol	Parameter	Min.	Typ.	Max.	Unit	Notes
Switch mode supply SW3						
V_{PVIN3}	Operating input voltage	2.8	—	4.5	V	[1]
V_{SW3}	Nominal output voltage	—	Table 50	—	V	
V_{SW3ACC}	Output voltage accuracy • PWM, APS, 2.8 V < V_{PVIN3} < 4.5 V, 0 < I_{SW3} < 1.5 A, 0.9 V < V_{SW3} < 1.65 V • PFM, steady state (2.8 V < V_{PVIN3} < 4.5 V, 0 < I_{SW3} < 50 mA), 0.9 V < V_{SW3} < 1.65 V	-3.0% -6.0%	— —	3.0% 6.0%	%	

All information provided in this document is subject to legal disclaimers.

© 2026 NXP B.V. All rights reserved.

Table 8. Static electrical characteristics – SW3*...continued*

All parameters are specified at T_A = -40 °C to 105 °C, V_{IN} = V_{PVIN3} = 3.6 V, V_{SW3} = 1.5 V, I_{SW3} = 100 mA, typical external component values, f_{SW3} = 2.0 MHz. Typical values are characterized at V_{IN} = V_{PVIN3} = 3.6 V, V_{SW3} = 1.5 V, I_{SW3} = 100 mA, and 25 °C, unless otherwise noted.

Symbol	Parameter	Min.	Typ.	Max.	Unit	Notes
I_{SW3}	Rated output load current, 2.8 V < V_{PVIN3} < 4.5 V, 0.9 V < V_{SW3} < 1.65 V, PWM, APS mode	1500	—	—	mA	[2]
I_{SW3Q}	Quiescent current • PFM Mode • APS Mode	— —	50 150	— —	µA	
I_{SW3LIM}	Current limiter peak current detection, current through inductor • SW3ILIM = 0 • SW3ILIM = 1	1.95 1.45	3.0 2.25	4.05 3.05	A	
ΔV_{SW3}	Output ripple	—	5.0	—	mV	
R_{ONSW3P}	SW3 P-MOSFET $R_{DS(on)}$at V_{IN} = V_{SW3IN} = 3.3 V	—	205	235	mΩ	
R_{ONSW3N}	SW3 N-MOSFET $R_{DS(on)}$ at V_{IN} = V_{SW3IN} = 3.3 V	—	250	315	mΩ	
I_{SW3PQ}	SW3 P-MOSFET leakage current, V_{IN} = V_{SW3IN} = 4.5 V	—	—	12	µA	
I_{SW3NQ}	SW3 N-MOSFET leakage current, V_{IN} = V_{SW3IN} = 4.5 V	—	—	4.0	µA	
R_{SW3DIS}	Discharge resistance during Off mode	—	600	—	Ω	
V_{SW3OSH}	Start-up overshoot, I_{SW3} = 0.0 mA, DVS clk = 25 mV/4 µs, V_{IN} = V_{PVIN3} = 4.5 V	—	—	66	mV	
t_{ONSW3}	Turn-on time, enable to 90% of end value, I_{SW3} = 0 mA, DVS clk = 25 mV/4 µs, V_{IN} = V_{PVIN3} = 4.5 V	—	—	500	µs	

[1] Minimum operating voltage is 2.8 V with a valid LICELL voltage (1.8 V to 3.3 V). Minimum operating voltage is 3.1 V when no voltage is applied at the LICELL pin. If operation down to 2.8 V is required for systems without a coin cell, connect the LICELL pin to any system voltage between 1.8 V and 3.3 V. This voltage can be an output from any VR5100 regulator or external system supply.

[2] The higher output voltages available depend on the voltage drop in the conduction path as given by the following equation: (V_{SW3IN} - V_{SW3}) = I_{SW3}* (DCR of Inductor +R_{ONSW3P} + PCB trace resistance).

Table 9. Static electrical characteristics - SWBST

All parameters are specified at T_A = -40 °C to 105 °C, V_{IN} = $V_{SWBSTIN}$ = 3.6 V, V_{SWBST} = 5.0 V, I_{SWBST} = 100 mA, typical external component values, f_{SWBST} = 2.0 MHz, otherwise noted. Typical values are characterized at V_{IN} = $V_{SWBSTIN}$ = 3.6 V, V_{SWBST} = 5.0 V, I_{SWBST} = 100 mA, and 25 °C, unless otherwise noted.

Symbol	Parameters	Min.	Typ.	Max.	Unit	Notes
Switch mode supply SWBST						
$V_{SWBSTIN}$	Input voltage range	2.8	—	4.5	V	[1]
V_{SWBST}	Nominal output voltage	—	Table 52	—	V	
I_{SWBST}	Continuous load current • 2.8 V ≤ V_{IN} ≤ 3.0 V • 3.0 V ≤ V_{IN} ≤ 4.5 V	500 600	— —	— —	mA	
$V_{SWBSTACC}$	Output voltage accuracy, 2.8 V ≤ V_{IN} ≤ 4.5 V, 0 < I_{SWBST} < $I_{SWBSTMAX}$	-4.0	—	3.0	%	
I_{SWBSTQ}	Quiescent current (auto mode)	—	222	289	µA	

All information provided in this document is subject to legal disclaimers.

© 2026 NXP B.V. All rights reserved.

Table 9. Static electrical characteristics - SWBST*...continued*

All parameters are specified at T_A = -40 °C to 105 °C, V_{IN} = $V_{SWBSTIN}$ = 3.6 V, V_{SWBST} = 5.0 V, I_{SWBST} = 100 mA, typical external component values, f_{SWBST} = 2.0 MHz, otherwise noted. Typical values are characterized at V_{IN} = $V_{SWBSTIN}$ = 3.6 V, V_{SWBST} = 5.0 V, I_{SWBST} = 100 mA, and 25 °C, unless otherwise noted.

Symbol	Parameters	Min.	Typ.	Max.	Unit	Notes
ΔV_{SWBST}	Output ripple, 2.8 V ≤ V_{IN} ≤ 4.5 V, 0 < I_{SWBST} < $I_{SWBSTMAX}$, excluding reverse recovery of Schottky diode	—	—	120	mVp-p	
$I_{SWBSTLIM}$	Peak Current Limit	1400	2200	3200	mA	[2]
$R_{DSONBST}$	MOSFET on resistance	—	206	306	mΩ	
$I_{SWBSTHSQ}$	NMOS Off leakage, V_{SWBST} = 4.5 V, SWBSTMODE [1:0] = 00	—	1.0	5.0	µA	
$V_{SWBSTOSH}$	Start-up overshoot, I_{SWBST} = 0.0 mA	—	—	500	mV	
$t_{ONSWBST}$	Turn-on time, enable to 90% of VSWBST, ISWBST = 0.0 mA	—	—	2.0	ms	

[1] Minimum operating voltage is 2.8 V with a valid LICELL voltage (1.8 V to 3.3 V). Minimum operating voltage is 3.1 V when no voltage is applied at the LICELL pin. If operation down to 2.8 V is required for systems without a coin cell, connect the LICELL pin to any system voltage between 1.8 V and 3.3 V. This voltage can be an output from any VR5100 regulator or external system supply.

[2] Only in Auto and APS modes

Table 10. Static electrical characteristics - VSNVS

All parameters are specified at T_A = -40 °C to 105 °C, V_{IN} = 3.6 V, V_{SNVS} = 3.0 V, I_{SNVS} = 5.0 µA, typical external component values, unless otherwise noted. Typical values are characterized at V_{IN} = 3.6 V, V_{SNVS} = 3.0 V, I_{SNVS} = 5.0 µA, and 25 °C, unless otherwise noted.

Symbol	Parameter	Min.	Typ.	Max.	Unit	Notes
VSNVS						
V_{IN}	Operating input voltage • Valid coin cell range • Valid V_{IN}	1.8 2.25	— —	3.3 4.5	V	
I_{SNVS}	Operating load current, V_{INMIN} < V_{IN} < V_{INMAX}	1.0	—	1000	µA	
V_{SNVS}	Output voltage • 5.0 µA < I_{SNVS} < 1000 µA (OFF), 3.20 V < V_{IN} < 4.5 V • 5.0 µA < I_{SNVS} < 1000 µA (ON), 3.20 V < V_{IN} < 4.5 V • 5.0 µA < ISNVS < 1000 µA (Coin Cell mode), 2.84 V < VCOIN < 3.3 V	-5.0% -5.0% VCOIN-0.10	3.0 3.0	7.0% 5.0% VCOIN	V	
$V_{SNVSDROP}$	Dropout voltage, 2.85 V < V_{IN} < 2.9 V, 1.0 µA < I_{SNVS} < 1000 µA	—	—	110	mV	
$I_{SNVSLIM}$	Current limit, V_{IN} > V_{TH1}	1100	—	6750	µA	
VSNVS DC, SWITCH						
V_{LICELL}	Operating input voltage, valid coin cell range	1.8	—	3.3	V	
I_{SNVS}	Operating load current	1.0	—	1000	µA	
$R_{DSONSNVS}$	Internal switch $R_{DS(on)}$	—	—	100	Ω	

All information provided in this document is subject to legal disclaimers.

© 2026 NXP B.V. All rights reserved.

Table 11. Dynamic electrical characteristics - VSNVS

All parameters are specified at T_A = -40 °C to 105 °C, V_{IN} = 3.6 V, V_{SNVS} = 3.0 V, I_{SNVS} = 5.0 µA, typical external component values, unless otherwise noted. Typical values are characterized at V_{IN} = 3.6 V, V_{SNVS} = 3.0 V, I_{SNVS} = 5.0 µA, and 25 °C, unless otherwise noted.

Symbol	Parameter	Min.	Typ.	Max.	Unit	Notes
VSNVS						
$V_{SNVSTON}$	Turn-on time (load capacitor, 0.47 µF), from V_{IN} = V_{TH1} to 90% of V_{SNVS}, V_{COIN} = 0.0 V, I_{SNVS} = 5.0 µA	—	—	24	ms	[1],[2]
$V_{SNVSOSH}$	Start-up overshoot, I_{SNVS} = 5.0 µA	—	40	70	mV	
$V_{SNVSLOTR}$	Transient load response, 3.2 < V_{IN} ≤ 4.5 V, I_{SNVS} = 100 to 1000 µA	2.8	—	—	V	
VTL1	V_{IN} falling threshold (V_{IN} powered to coin cell powered)	2.45	2.70	3.05	V	
VTH1	V_{IN} Rising Threshold (coin cell powered to V_{IN} powered)	2.5	2.75	3.10	V	
VHYST1	V_{IN} threshold hysteresis for V_{TH1}-V_{TL1}	5.0	—	—	mV	
VSNVSCROSS	Output voltage during crossover, V_{COIN} > 2.9 V, Switch to LDO: V_{IN} > V_{TH1}, I_{SNVS} = 100 µA, LDO to Switch: V_{IN} < V_{TL1}, I_{SNVS} = 100 µA	2.45	—	—	V	

[1] The start-up of V_{SNVS} is not monotonic. It first rises to 1.0 V and then settles to 3.0 V.
[2] From coin cell insertion to VSNVS = 1.0 V, the delay time is typically 400 ms.

Table 12. Static electrical characteristics - LDO1

All parameters are specified at T_A = -40 °C to 105 °C, V_{IN} = 3.6 V, V_{LDOIN1} = 3.6 V, V_{LDO1} = 3.3 V, I_{LDO1} = 10 mA, typical external component values, unless otherwise noted. Typical values are characterized at V_{IN} = 3.6 V, V_{LDOIN1} = 3.6 V, V_{LDO1} = 3.3 V, I_{LDO1} = 10 mA, and 25 °C, unless otherwise noted.

Symbol	Parameter	Min.	Typ.	Max.	Unit	Notes
LDO1 linear regulator						
V_{LDOIN1}	Operating input voltage • 1.8 V ≤ $V_{LDO1NOM}$ ≤ 2.5 V • 2.6 V ≤ $V_{LDO1NOM}$ ≤ 3.3 V	2.8 $V_{LDO1NOM}$ + 0.250	— —	4.5 4.5	V	Table 54
$V_{LDO1NOM}$	Nominal output voltage	—	Table 55	—	V	
I_{LDO1}	Rated output load current	100	—	—	mA	
$V_{LDO1TOL}$	Output voltage tolerance, $V_{LDO1INMIN}$ < V_{LDOIN1} < 4.5 V, 0.0 mA < I_{LDO1} < 100 mA, LDO1 = 1.8 V to 3.3 V	-3.0	—	3.0	%	
I_{LDO1Q}	Quiescent current, no load, change in I_{VIN}, when LDO1 enabled	—	13	—	µA	
$I_{LDO1LIM}$	Current limit, I_{LDO1} when V_{LDO1} is forced to $V_{LDO1NOM}$/2	122	167	280	mA	

Table 13. Dynamic electrical characteristics - LDO1

All parameters are specified at T_A = -40 °C to 105 °C, V_{IN} = 3.6 V, V_{LDOIN1} = 3.6 V, V_{LDO1} = 3.3 V, I_{LDO1} = 10 mA, typical external component values, unless otherwise noted. Typical values are characterized at V_{IN} = 3.6 V, V_{LDOIN1} = 3.6 V, V_{LDO1} = 3.3 V, I_{LDO1} = 10 mA, and 25 °C, unless otherwise noted.

Symbol	Parameter	Min.	Typ.	Max.	Unit	Notes
LDO1 linear regulator						
$PSRR_{LDO1}$	PSRR, I_{LDO1} = 75 mA, 20 Hz to 20 kHz • LDO1 = 1.8 V to 3.3 V, V_{LDOIN1} = $V_{LDO1INMIN}$ + 100 mV	35 52	40 60	— —	dB	

All information provided in this document is subject to legal disclaimers.

© 2026 NXP B.V. All rights reserved.

Table 13. Dynamic electrical characteristics - LDO1*...continued*

All parameters are specified at T_A = -40 °C to 105 °C, V_{IN} = 3.6 V, V_{LDOIN1} = 3.6 V, V_{LDO1} = 3.3 V, I_{LDO1} = 10 mA, typical external component values, unless otherwise noted. Typical values are characterized at V_{IN} = 3.6 V, V_{LDOIN1} = 3.6 V, V_{LDO1} = 3.3 V, I_{LDO1} = 10 mA, and 25 °C, unless otherwise noted.

Symbol	Parameter	Min.	Typ.	Max.	Unit	Notes
	• LDO1 = 1.8 V to 3.3 V, V_{LDOIN1} = $V_{LDO1NOM}$ + 1.0 V					
$NOISE_{LDO1}$	Output noise density, V_{LDOIN1} = $V_{LDO1INMIN}$, I_{LDO1} = 75 mA • 100 Hz to <1.0 kHz • 1.0 kHz to <10 kHz • 10 kHz to 1.0 MHz	— — —	-114 -129 -135	-102 -123 -130	dBV/√Hz	
t_{ONLDO1}	Turn-On time, enable to 90% of end value, V_{LDOIN1} = $V_{LDO1INMIN}$ to 4.5 V, I_{LDO1} = 0.0 mA, all output voltage settings	60	—	500	µs	
$t_{OFFLDO1}$	Turn-Off time, disable to 10% of initial value, V_{LDOIN1} = $V_{LDO1INMIN}$, I_{LDO1} = 0.0 mA	—	—	10	ms	
$LDO1_{OSHT}$	Start-up overshoot, V_{LDOIN1} = $V_{LDO1INMIN}$ to 4.5 V, I_{LDO1} = 0.0 mA	—	1.0	2.0	%	

Table 14. Static electrical characteristics - LDO2

All parameters are specified at T_A = -40 °C to 105 °C, V_{IN} = 3.6 V, V_{LDOIN2} = 3.0 V, V_{LDO2} = 1.55 V, I_{LDO2} = 10 mA, typical external component values, unless otherwise noted. Typical values are characterized at V_{IN} = 3.6 V, V_{LDOIN2} = 3.0 V, V_{LDO2} = 1.55 V, I_{LDO2} = 10 mA and 25 °C, unless otherwise noted.

Symbol	Parameter	Min.	Typ.	Max.	Unit	Notes
LDO2 linear regulator						
V_{LDOIN2}	Operating Input Voltage	1.75	—	3.40	V	
$V_{LDO2NOM}$	Nominal output voltage	—	Table 56	—	V	
I_{LDO2}	Rated output load current	250	—	—	mA	
$V_{LDO2TOL}$	Output voltage tolerance, 1.75 V < V_{LDOIN2} < 3.40 V, 0.0 mA < I_{LDO2} < 250 mA, LDO2 = 0.8 V to 1.55 V	-3.0	—	3.0	%	
I_{LDO2Q}	Quiescent current, no load, change in I_{VIN} and $I_{VLDOIN2}$, when V_{LDO2} enabled	—	16	—	µA	
$I_{LDO2LIM}$	Current limit, I_{LDO2} when V_{LDO2} is forced to $V_{LDO2NOM}$/2	333	417	612	mA	

Table 15. Dynamic electrical characteristics - LDO2

All parameters are specified at T_A = -40 °C to 105 °C, V_{IN} = 3.6 V, V_{LDOIN2} = 3.0 V, V_{LDO2} = 1.55 V, I_{LDO2} = 10 mA, typical external component values, unless otherwise noted. Typical values are characterized at V_{IN} = 3.6 V, V_{LDOIN2} = 3.0 V, V_{LDO2} = 1.55 V, I_{LDO2} = 10 mA and 25 °C, unless otherwise noted.

Symbol	Parameter	Min.	Typ.	Max.	Unit	Notes
LDO2 linear regulator						
$PSRR_{LDO2}$	PSRR, I_{LDO2} = 187.5 mA, 20 Hz to 20 kHz • LDO2 = 0.8 V to 1.55 V • LDO2 = 1.1 V to 1.55 V	50 37	60 45	— —	dB	

All information provided in this document is subject to legal disclaimers.

© 2026 NXP B.V. All rights reserved.

Table 15. Dynamic electrical characteristics - LDO2*...continued*

All parameters are specified at T_A = -40 °C to 105 °C, V_{IN} = 3.6 V, V_{LDOIN2} = 3.0 V, V_{LDO2} = 1.55 V, I_{LDO2} = 10 mA, typical external component values, unless otherwise noted. Typical values are characterized at V_{IN} = 3.6 V, V_{LDOIN2} = 3.0 V, V_{LDO2} = 1.55 V, I_{LDO2} = 10 mA and 25 °C, unless otherwise noted.

Symbol	Parameter	Min.	Typ.	Max.	Unit	Notes
$NOISE_{LDO2}$	Output noise density, V_{LDOIN2} = 1.75 V, I_{LDO2} = 187.5 mA • 100 Hz to <1.0 kHz • 1.0 kHz to <10 kHz • 10 kHz to 1.0 MHz	 — — —	 -108 -118 -124	 -100 -108 -112	dBV/√Hz	
t_{ONLDO2}	Turn-on time, enable to 90% of end value, V_{LDO2IN} = 1.75 V to 3.4 V, I_{LDO2} = 0.0 mA	60	—	500	µs	
$t_{OFFLDO2}$	Turn-Off time, disable to 10% of initial value, V_{LDO2IN} = 1.75 V, I_{LDO2} = 0.0 mA	—	—	10	ms	
$LDO2_{OSHT}$	Start-up overshoot, V_{LDO2IN} = 1.75 V to 3.4 V, I_{LDO2} = 0.0 mA	—	1.0	2.0	%	

Table 16. Static electrical characteristics – VSD

All parameters are specified at T_A = -40 °C to 105 °C, V_{IN} = 3.6 V, V18 = 1.85 V, I_{VSD} = 10 mA, typical external component values, unless otherwise noted. Typical values are characterized at V_{IN} = 3.6 V, V18 = 1.85 V, I_{VSD} = 10 mA, and 25 °C, unless otherwise noted.

Symbol	Parameter	Min.	Typ.	Max.	Unit	Notes
V18 linear regulator						
V_{PVIN2}	Operating input voltage	2.8	—	4.5	V	[1]
V_{VSD}	Nominal output voltage	—	Table 58	—	V	
I_{VSD}	Rated output load current	100	—	—	mA	
V_{VSD}	Output voltage accuracy, 2.8 V < V_{IN} < 4.5 V, 0.0 mA < I_{VSD} < 100 mA	-3.0	—	3.0	%	
I_{VSD}	Quiescent current, no load, change in I_{VIN} and I_{PVIN2}, When V_{18} enabled	—	13	—	µA	
I_{VSDLIM}	Current limit, I_{VSD} when V_{VSD} is forced to V_{VSDNOM}/2	122	167	280	mA	

[1] Minimum operating voltage is 2.8 V with a valid LICELL voltage (1.8 V to 3.3 V). Minimum operating voltage is 3.1 V when no voltage is applied at the LICELL pin. If operation down to 2.8 V is required for systems without a coin cell, connect the LICELL pin to any system voltage between 1.8 V and 3.3 V. This voltage can be an output from any VR5100 regulator or external system supply.

Table 17. Dynamic Electrical Characteristics - VSD

All parameters are specified at T_A = -40 °C to 105 °C, V_{IN} = 3.6 V, V18 = 1.85 V, I_{VSD} = 10 mA, typical external component values, unless otherwise noted. Typical values are characterized at V_{IN} = 3.6 V, V18 = 1.85 V, I_{VSD} = 10 mA, and 25 °C, unless otherwise noted.

Symbol	Parameter	Min.	Typ.	Max.	Unit	Notes
V18 LINEAR REGULATOR						
$PSRR_{VSD}$	PSRR, I_{VSD} = 75 mA, 20 Hz to 20 kHz • V18, V_{IN} = V_{VSDNOM} + 1.0 V	52	60	—	dB	

All information provided in this document is subject to legal disclaimers.

© 2026 NXP B.V. All rights reserved.

Table 17. Dynamic Electrical Characteristics - VSD*...continued*

All parameters are specified at T_A = -40 °C to 105 °C, V_{IN} = 3.6 V, V18 = 1.85 V, I_{VSD} = 10 mA, typical external component values, unless otherwise noted. Typical values are characterized at V_{IN} = 3.6 V, V18 = 1.85 V, I_{VSD} = 10 mA, and 25 °C, unless otherwise noted.

Symbol	Parameter	Min.	Typ.	Max.	Unit	Notes
$NOISE_{VSD}$	Output Noise Density, V_{IN} = 2.8V, I_{VSD} = 75 mA • 100 Hz – <1.0 kHz • 1.0 kHz – <10 kHz • 10 kHz – 1.0 MHz	— — —	-114 -129 -135	-102 -123 -130	dBV/√Hz	
V18 linear regulator (Continued)						
t_{ONVSD}	Turn-on time, enable to 90% of end value, V_{IN} = 2.8 V to 4.5 V, I_{VSD} = 0.0 mA	60	—	500	µs	
t_{OFFVSD}	Turn-off time, disable to 10% of initial value, V_{IN} = 2.8 V, I_{VSD} = 0.0 mA	—	—	10	ms	
VSD_{OSHT}	Start-up overshoot, V_{IN} = 2.8 V to 4.5 V, I_{VSD} = 0.0 mA	—	1.0	2.0	%	

Table 18. Static Electrical Characteristics – V33

All parameters are specified at T_A = -40 °C to 105 °C, V_{IN} = 3.6 V, V_{33} = 3.3 V, I_{V33} = 10 mA, typical external component values, unless otherwise noted. Typical values are characterized at V_{IN} = 3.6 V, V_{33} = 3.3 V, I_{V33} = 10 mA, and 25 °C, unless otherwise noted.

Symbol	Parameter	Min.	Typ.	Max.	Unit	Notes
V33 linear regulator						
V_{IN}	Operating input voltage, 2.9 V ≤ V_{33NOM} ≤ 3.6 V	2.8	—	4.5	V	[1] [2]
V_{33NOM}	Nominal output voltage	—	Table 57	—	V	
I_{V33}	Rated output load current	350	—	—	mA	
V_{33TOL}	Output voltage tolerance, 2.8 V < V_{IN} < 4.5 V, 0.0 mA < I_{V33} < 350 mA, V_{33}[1:0] = 00 to 11	-3.0	—	3.0	%	
I_{V33Q}	Quiescent current, no load, change in I_{VIN}, When V_{33} enabled	—	13	—	µA	
I_{V33LIM}	Current limit, I_{V33} when V_{33} is forced to V_{33NOM}/2	435	584.5	950	mA	

[1] When the LDO output voltage is set above 2 .6 V, the minimum allowed input voltage must be at least the output voltage plus 0 .25 V for proper regulation due to the dropout voltage generated through the internal LDO transistor.

[2] Minimum operating voltage is 2 .8 V with a valid LICELL voltage (1.8 V to 3.3 V). Minimum operating voltage is 3 .1 V when no voltage is applied at the LICELL pin. If operation down to 2 .8 V is required for systems without a coin cell, connect the LICELL pin to any system voltage between 1 .8 V and 3.3 V. This voltage can be an output from any VR5100 regulator or external system supply.

Table 19. Dynamic electrical characteristics – V33

All parameters are specified at T_A = -40 °C to 105 °C, V_{IN} = 3.6 V, V_{33} = 3.3 V, I_{V33} = 10 mA, typical external component values, unless otherwise noted. Typical values are characterized at V_{IN} = 3.6 V, V_{33} = 3.3 V, I_{V33} = 10 mA, and 25 °C, unless otherwise noted.

Symbol	Parameter	Min.	Typ.	Max.	Unit	Notes
V33 linear regulator						
$PSRR_{V33}$	PSRR, I_{V33} = 262.5 mA, 20 Hz to 20 kHz, V_{33}[1:0] = 00 - 11, V_{IN} = V_{33NOM} + 1.0 V	52	60	—	dB	[1]

All information provided in this document is subject to legal disclaimers.

© 2026 NXP B.V. All rights reserved.

Table 19. Dynamic electrical characteristics – V33...*continued*

All parameters are specified at T_A = -40 °C to 105 °C, V_{IN} = 3.6 V, V_{33} = 3.3 V, I_{V33} = 10 mA, typical external component values, unless otherwise noted. Typical values are characterized at V_{IN} = 3.6 V, V_{33} = 3.3 V, I_{V33} = 10 mA, and 25 °C, unless otherwise noted.

Symbol	Parameter	Min.	Typ.	Max.	Unit	Notes
$NOISE_{V33}$	Output noise density, V_{IN} = 2.8 V, I_{V33} = 262.5 mA • 100 Hz to <1.0 kHz • 1.0 kHz to <10 kHz • 10 kHz to 1.0 MHz	— — —	-114 -129 -135	-102 -123 -130	dBV/√Hz	
t_{ONV33}	Turn-On time, enable to 90% of end value, V_{IN} = 2.8 V, to 4.5 V, I_{V33} = 0.0 mA	60	—	500	µs	
t_{OFFV33}	Turn-Off time, disable to 10% of initial value, V_{IN} = 2.8 V, I_{V33} = 0.0 mA	—	—	10	ms	
V_{33OSHT}	Start-up overshoot, V_{IN} = 2.8 V to 4.5 V, I_{V33} = 0.0 mA	—	1.0	2.0	%	

[1] Minimum operating voltage is 2 .8 V with a valid LICELL voltage (1.8 V to 3.3 V). Minimum operating voltage is 3 .1 V when no voltage is applied at the LICELL pin. If operation down to 2 .8 V is required for systems without a coin cell, connect the LICELL pin to any system voltage between 1 .8 V and 3.3 V. This voltage can be an output from any VR5100 regulator or external system supply.

Table 20. Static electrical characteristics – LDO3

All parameters are specified at T_A = -40 °C to 105 °C, V_{IN} = 3.6 V, $V_{LDOIN34}$ = 3.6 V, V_{LDO3} = 3.3 V, I_{LDO3} = 10 mA, typical external component values, unless otherwise noted. Typical values are characterized at V_{IN} = 3.6 V, $V_{LDOIN34}$ = 3.6 V, V_{LDO3} = 3.3 V, I_{LDO3} = 10 mA, and 25 °C, unless otherwise noted.

Symbol	Parameter	Min.	Typ.	Max.	Unit	Notes
LDO3 linear regulator						
$V_{LDOIN34}$	Operating input voltage • 1.8 V ≤ $V_{LDO3NOM}$ ≤ 2.5 V • 2.6 V ≤ $V_{LDO3NOM}$ ≤ 3.3 V	2.8 $V_{LDO3NOM}$ + 0.250	— —	3.6 3.6	V	[1]
$V_{LDO3NOM}$	Nominal output voltage	—	Table 56	—	V	
I_{LDO3}	Rated output load current	100	—	—	mA	
$V_{LDO3TOL}$	Output voltage tolerance, $V_{LDOIN34MIN}$ < $V_{LDOIN34}$ < 3.6 V, 0.0 mA < I_{LDO3} < 100 mA, LDO3 = 1.8 V to 3.3 V	-3.0	—	3.0	%	
I_{LDO3Q}	Quiescent current, no load, change in I_{VIN} and $I_{VLDOIN34}$, when V_{LDO3} enabled	—	13	—	µA	
$I_{LDO3LIM}$	Current limit, I_{LDO3} when V_{LDO3} is forced to $V_{LDO3NOM}$/2	122	167	280	mA	

[1] Minimum operating voltage is 2 .8 V with a valid LICELL voltage (1.8 V to 3.3 V). Minimum operating voltage is 3 .1 V when no voltage is applied at the LICELL pin. If operation down to 2 .8 V is required for systems without a coin cell, connect the LICELL pin to any system voltage between 1 .8 V and 3.3 V. This voltage can be an output from any VR5100 regulator or external system supply.

Table 21. Dynamic electrical characteristics – LDO3

All parameters are specified at T_A = -40 °C to 105 °C, V_{IN} = 3.6 V, $V_{LDOIN34}$ = 3.6 V, V_{LDO3} = 3.3 V, I_{LDO3} = 10 mA, typical external component values, unless otherwise noted. Typical values are characterized at V_{IN} = 3.6 V, $V_{LDOIN34}$ = 3.6 V, V_{LDO3} = 3.3 V, I_{LDO3} = 10 mA, and 25 °C, unless otherwise noted.

Symbol	Parameter	Min.	Typ.	Max.	Unit	Notes
LDO3 linear regulator						

All information provided in this document is subject to legal disclaimers.

© 2026 NXP B.V. All rights reserved.

Table 21. Dynamic electrical characteristics – LDO3...*continued*

All parameters are specified at T_A = -40 °C to 105 °C, V_{IN} = 3.6 V, $V_{LDOIN34}$ = 3.6 V, V_{LDO3} = 3.3 V, I_{LDO3} = 10 mA, typical external component values, unless otherwise noted. Typical values are characterized at V_{IN} = 3.6 V, $V_{LDOIN34}$ = 3.6 V, V_{LDO3} = 3.3 V, I_{LDO3} = 10 mA, and 25 °C, unless otherwise noted.

Symbol	Parameter	Min.	Typ.	Max.	Unit	Notes
$PSRR_{LDO3}$	PSRR, I_{LDO3} = 75 mA, 20 Hz to 20 kHz • LDO3 = 1.8 V to 3.3 V, $V_{LDOIN34}$ = $V_{LDO34INMIN}$ + 100 mV • LDO3 = 1.8 V to 3.3 V, $V_{LDOIN34}$ = $V_{LDO3NOM}$ + 1.0 V	35 52	40 60	— —	dB	
$NOISE_{LDO3}$	Output noise density, $V_{LDO34IN}$ = $V_{LDOIN34MIN}$, I_{LDO3} = 75 mA • 100 Hz to <1.0 kHz • 1.0 kHz to <10 kHz • 10 kHz to 1.0 MHz	— — —	-114 -129 -135	-102 -123 -130	dBV/√Hz	
LDO3 linear regulator (Continued)						
t_{ONLDO3}	Turn-on time, enable to 90% of end value, $V_{LDOIN34}$ = $V_{LDOIN34MIN}$ to 3.6 V, I_{LDO3} = 0.0 mA	60	—	500	µs	
$t_{OFFLDO3}$	Turn-off time, disable to 10% of initial value, $V_{LDOIN34}$ = $V_{LDOIN34MIN}$, I_{LDO3} = 0.0 mA	—	—	10	ms	
$LDO3_{OSHT}$	Start-up overshoot, $V_{LDOIN34}$ = $V_{LDOIN34MIN}$ to 3.6 V, I_{LDO3} = 0.0 mA	—	1.0	2.0	%	

Table 22. Static electrical characteristics - LDO4

All parameters are specified at T_A = -40 °C to 105 °C, V_{IN} = 3.6 V, $V_{LDOIN34}$ = 3.6 V, VLDO4 = 3.3 V, I_{LDO4} = 10 mA, typical external component values, unless otherwise noted. Typical values are characterized at V_{IN} = 3.6 V, $V_{LDOIN34}$ = 3.6 V, VLDO4 = 3.3 V, I_{LDO4} = 10 mA, and 25 °C, unless otherwise noted.

Symbol	Parameter	Min.	Typ.	Max.	Unit	Notes
LDO4 LINEAR REGULATOR						
$V_{LDOIN34}$	Operating input voltage • 1.8 V ≤ $V_{LDO4NOM}$ ≤ 2.5 V • 2.6 V ≤ $V_{LDO4NOM}$ ≤ 3.3 V	2.8 $V_{LDO4NOM}$ + 0.250	— —	3.6 3.6	V	[1]
$V_{LDO4NOM}$	Nominal output voltage	—	Table 56	—	V	
I_{LDO4}	Rated output load current	350	—	—	mA	
$V_{LDO4TOL}$	Output voltage tolerance, $V_{LDOIN34MIN}$ < $V_{LDOIN34}$ < 3.6 V, 0.0 mA < I_{LDO3} < 100 mA, VLDO4 = 1.9 V to 3.3 V	-3.0	—	3.0	%	
I_{LDO4Q}	Quiescent current, no load, change in I_{VIN} and $I_{VLDOIN34}$, When V_{LDO4} enabled	—	13	—	µA	
$I_{LDO4LIM}$	Current limit, I_{LDO4} when V_{LDO4} is forced to $V_{LDO4NOM}$/2	435	584.5	950	mA	
$PSRR_{VLDO4}$	PSRR, I_{LDO4} = 262.5 mA, 20 Hz to 20 kHz • LDO4 = 1.9 V to 3.3 V, $V_{LDOIN34}$ = $V_{LDOIN34MIN}$ + 100 mV • LDO4 = 1.9 V to 3.3 V, $V_{LDOIN34}$ = $V_{LDO4NOM}$ + 1.0 V	35 52	40 60	— —	dB	

[1] Minimum operating voltage is 2.8 V with a valid LICELL voltage (1.8 V to 3.3 V). Minimum operating voltage is 3.1 V when no voltage is applied at the LICELL pin. If operation down to 2.8 V is required for systems without a coin cell, connect the LICELL pin to any system voltage between 1.8 V and 3.3 V. This voltage can be an output from any VR5100 regulator or external system supply.

All information provided in this document is subject to legal disclaimers.

© 2026 NXP B.V. All rights reserved.

Table 23. Dynamic electrical characteristics - LDO4

All parameters are specified at T_A = -40 °C to 105 °C, V_{IN} = 3.6 V, $V_{LDOIN34}$ = 3.6 V, LDO4 = 3.3 V, I_{LDO4} = 10 mA, typical external component values, unless otherwise noted. Typical values are characterized at V_{IN} = 3.6 V, $V_{LDOIN34}$ = 3.6 V, LDO4 = 3.3 V, I_{LDO4} = 10 mA, and 25 °C, unless otherwise noted.

Symbol	Parameter	Min.	Typ.	Max.	Unit	Notes
LDO4 linear regulator						
$NOISE_{LDO4}$	Output noise density, $V_{LDOIN342}$ = $V_{LDOIN34MIN}$, I_{LDO4} = 262.5 mA • 100 Hz to <1.0 kHz • 1.0 kHz to <10 kHz • 10 kHz to 1.0 MHz	— — —	-114 -129 -135	-102 -123 -130	dBV/√Hz	
t_{ONLDO4}	Turn-on time, enable to 90% of end value, $V_{LDO34IN}$ = $V_{LDOIN34MIN}$, 3.6 V, I_{LDO4} = 0.0 mA	60	—	500	µs	
$t_{OFFLDO4}$	Turn-off time, disable to 10% of initial value, $V_{LDOIN34}$ = $V_{LDOIN34MIN}$, I_{LDO4} = 0.0 mA	—	—	10	ms	
$LDO4_{OSHT}$	Start-up overshoot, $V_{LDOIN34}$ = $V_{LDOIN34MIN}$, 3.6 V, I_{LDO4} = 0.0 mA	—	1.0	2.0	%	

Table 24. Static electrical characteristics - REFOUT

All parameters are specified at T_A = -40 °C to 105 °C, V_{IN} = 3.6 V, I_{REFOUT} = 0.0 mA, V_{REFIN} = 1.5 V, and typical external component values, unless otherwise noted. Typical values are characterized at V_{IN} = 3.6 V, I_{REFOUT} = 0.0 mA, V_{REFIN} = 1.5 V, and 25 °C, unless otherwise noted.

Symbol	Parameter	Min.	Typ.	Max.	Unit	Notes
REFOUT linear regulator						
V_{REFIN}	Operating input voltage range	1.2	—	1.65	V	[1]
V_{REFOUT}	Output voltage, 1.2 V < V_{REFIN} < 1.65 V, 0.0 mA < I_{REFOUT} < 10 mA	—	V_{REFIN}/2	—	V	
$V_{REFOUTTOL}$	Output voltage tolerance, as a percentage of V_{REFIN}, 1.2 V < V_{REFIN} < 1.65 V, 0.6 mA < I_{REFOUT} < 10 mA	49.5	50	50.5	%	
I_{REFOUT}	Rated output load current	10	—	—	mA	
$I_{REFOUTQ}$	Quiescent current	—	12	—	µA	[2]
$I_{REFOUTLM}$	Current limit, I_{REFOUT} when V_{REFOUT} is forced to $V_{INR EFOUT}$/4	10.5	15	25	mA	

[1] When using SW3 as input, the REFOUT input voltage range specification refers to the voltage set point of SW3 and not the absolute value.
[2] When REFOUT is off there is a quiescent current of a typical 2.0 µA.

Table 25. Dynamic electrical characteristics - REFOUT

All parameters are specified at T_A = -40 °C to 105 °C, V_{IN} = 3.6 V, I_{REFOUT} = 0.0 mA, V_{REFIN} = 1.5 V, and typical external component values, unless otherwise noted. Typical values are characterized at V_{IN} = 3.6 V, I_{REFOUT} = 0.0 mA, V_{REFIN} = 1.5 V, and 25 °C, unless otherwise noted.

Symbol	Parameter	Min.	Typ.	Max.	Unit	Notes
REFOUT linear regulator						
$t_{ONREFOUT}$	Turn-on time, enable to 90% of end value, V_{REFIN} = 1.2 V to 1.65 V, I_{REFOUT} = 0.0 mA	—	—	100	µs	

All information provided in this document is subject to legal disclaimers.

© 2026 NXP B.V. All rights reserved.

Table 25. Dynamic electrical characteristics - REFOUT*...continued*

All parameters are specified at T_A = -40 °C to 105 °C, V_{IN} = 3.6 V, I_{REFOUT} = 0.0 mA, V_{REFIN} = 1.5 V, and typical external component values, unless otherwise noted. Typical values are characterized at V_{IN} = 3.6 V, I_{REFOUT} = 0.0 mA, V_{REFIN} = 1.5 V, and 25 °C, unless otherwise noted.

Symbol	Parameter	Min.	Typ.	Max.	Unit	Notes
$t_{OFFREFOUT}$	Turn-off time, disable to 10% of initial value, V_{REFIN} = 1.2 V to 1.65 V, I_{REFOUT} = 0.0 mA	—	—	10	ms	
$V_{REFOUTOSH}$	Start-up overshoot, V_{REFIN} = 1.2 V to 1.65 V, I_{REFOUT} = 0.0 mA	—	1.0	6.0	%	

Table 26. Static electrical characteristics - Coin Cell

All parameters are specified at T_A = -40 °C to 105 °C, V_{IN} = 3.6 V, typical external component values, unless otherwise noted.

Symbol	Parameter	Min.	Typ.	Max.	Unit	Notes
Coin cell						
$V_{COINACC}$	Charge voltage accuracy	-100	—	-100	mV	
$I_{COINACC}$	Charge current accuracy	-30	—	30	%	
I_{COIN}	Coin cell charge current • I_{COINHI} (in On mode) • I_{COINLO} (in On mode)	— —	60 10	— —	µA	

Table 27. Static electrical characteristics - Digital I/O

All parameters are specified at T_A = -40 °C to 105 °C, V_{CCI2C} = 1.7 V to 3.6 V, and typical external component values and full load current range, unless otherwise noted.

Pin name	Parameter	Load condition	Min.	Max.	Unit	Notes
EN	• V_L • V_H	— —	0.0 0.8 * V_{SNVS}	0.2 * V_{SNVS} 3.6	V	
PORB	• V_{OL} • V_{OH}	-2.0 mA Open drain	0.0 0.7 * V_{CCI2C}	0.4 * V_{CCI2C} V_{CCI2C}	V	
SCL	• V_L • V_H	— —	0.0 0.8 * V_{CCI2C}	0.2 * V_{CCI2C} 3.6	V	
SDA	• V_L • V_H • V_{OL} • V_{OH}	— — -2.0 mA Open drain	0.0 0.8 * V_{CCI2C} 0.0 0.7 * V_{CCI2C}	0.2 * V_{CCI2C} 3.6 0.4 * V_{CCI2C} V_{CCI2C}	V	
INTB	• V_{OL} • V_{OH}	-2.0 mA Open drain	0.0 0.7 * V_{CCI2C}	0.4 * V_{CCI2C} V_{CCI2C}	V	
STBY	• V_L	—	0.0	0.2 * V_{SNVS}	V	

All information provided in this document is subject to legal disclaimers.

© 2026 NXP B.V. All rights reserved.

Table 27. Static electrical characteristics - Digital I/O*...continued*

All parameters are specified at T_A = -40 °C to 105 °C, V_{CCI2C} = 1.7 V to 3.6 V, and typical external component values and full load current range, unless otherwise noted.

Pin name	Parameter	Load condition	Min.	Max.	Unit	Notes
	• V_H	—	0.8 * V_{SNVS}	3.6		
SD_VSEL	• V_L • V_H	—	0.0 0.8 * V_{CCI2C}	0.2 * V_{CCI2C} 3.6	V	
VDDOTP	• V_L • V_H	— —	0.0 1.1	0.3 1.7	V	

Table 28. Static electrical characteristics - internal supplies

All parameters are specified at T_A = -40 °C to 105 °C, V_{IN} = 2.8 V to 4.5 V, LicelI = 1.8 V to 3.3 V and typical external component values. Typical values are characterized at V_{IN} = 3.6 V, LicelI = 3.0 V, and 25 °C, unless otherwise noted.

Symbol	Parameter	Min.	Typ.	Max.	Unit	Notes
VDIG (digital core supply)						
V_{DIG}	Output voltage • ON mode • Coin cell mode and OFF mode	— —	1.5 1.3	— —	V	[1]
VCC (analog core supply)						
V_{CC}	Output voltage • ON mode and charging • Coin cell mode and OFF mode	— —	2.775 0.0	— —	V	[1]
VBG (BANDGAP regulator reference)						
V_{BG}	Output voltage at 25 °C	—	1.2	—	V	[1]
V_{BGACC}	Absolute trim accuracy	—	0.5	—	%	
V_{BGTACC}	Temperature drift	—	0.25	—	%	

[1] 3 .1 V < V_{IN} < 4.5 V, no external loading on VDIG, VCC, or VBG

Table 29. Static electrical characteristics - UVDET threshold

All parameters are specified at T_A = -40 °C to 105 °C, V_{IN} = 2.8 V to 4.5 V, LicelI = 1.8 V to 3.3 V and typical external component values. Typical values are characterized at V_{IN} = 3.6 V, LicelI = 3.0 V, and 25 °C, unless otherwise noted.

Symbol	Parameter	Min.	Typ.	Max.	Unit	Notes
V_{IN} UVDET threshold						
V_{UVDET}	• Rising • Falling	— 2.5	— —	3.1 —	V	

All information provided in this document is subject to legal disclaimers.

© 2026 NXP B.V. All rights reserved.

7 General description

The VR5100 is a high performance, highly integrate, multi-output, SMARTMOS, DC/DC regulator solution, with integrated power MOSFETs ideally suited for the LS1 family of communications processors.

7.1 Features

This section summarizes the VR5100 features.

- Input voltage range to PMIC: 2.8 V to 4.5 V
  - Buck regulators
    - Configurable three channels
    - SW1, 3.8 A (single); 0.7 V to 1.425 V, 1.8 V, 3.3 V
    - SW2, 1.25 A; 1.50 V to 1.85 V or 2.50 V to 3.30 V
    - SW3, 1.5 A; 0.90 V to 1.65 V
    - Dynamic voltage scaling
    - Modes: PWM, PFM, APS
    - Programmable output voltage
    - Programmable current limit
    - Programmable soft start sequence
    - Programmable PWM switching frequency
  - Boost regulator
    - SWBST, 5.0 V to 5.15 V, 0.6 A, OTG support
    - Modes: PFM and Auto
    - OCP fault interrupt
  - LDOs
    - VSD, 1.8 V or 3.3 V, 100 mA, based on SD_VSEL
    - V33, 2.85 V to 3.30 V, 350 mA
    - LDO1, 1.8 V to 3.3 V, 100 mA
    - LDO2, 0.80 V to 1.55 V, 250 mA
    - LDO3, 1.8 V to 3.3 V, 100 mA
    - LDO4, 1.8 V to 3.3 V, 350 mA
- Always ON RTC regulator/switch VSNVS 3.0 V, 1.0 mA
- Coin cell charger
- DDR memory reference voltage, REFOUT, 0.5 V to 0.9 V, 10 mA
- OTP (one time programmable) memory for device configuration, user-programmable start-up sequence and timing
- I^2C interface
- User programmable Standby, Sleep/LPSR, and Off modes

All information provided in this document is subject to legal disclaimers.

© 2026 NXP B.V. All rights reserved.

7.2 Functional block diagram

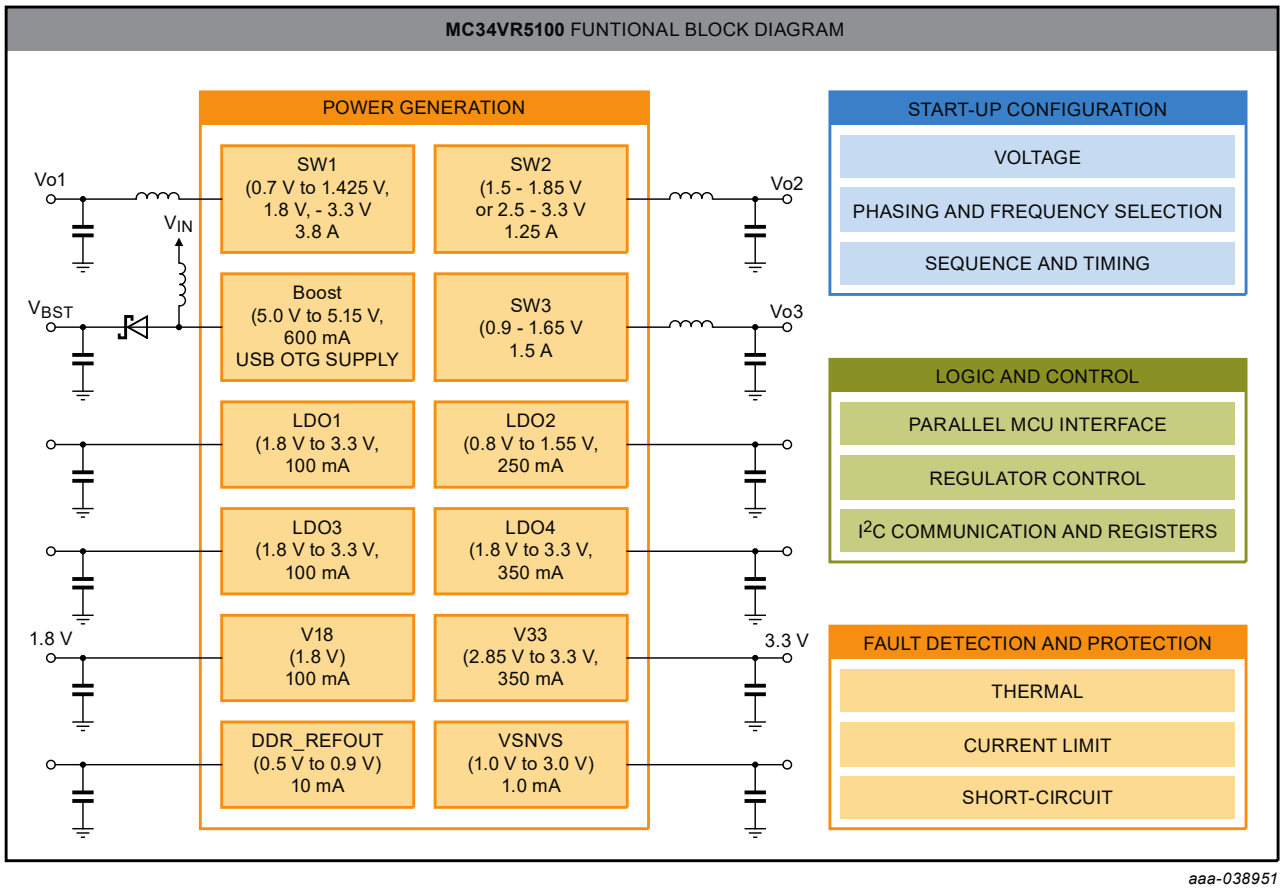

Figure 4. Functional block diagram

All information provided in this document is subject to legal disclaimers.

© 2026 NXP B.V. All rights reserved.

8 Functional description and application Information

8.1 Introduction

The VR5100 is a highly integrated, low quiescent current power management IC featuring three buck regulators, one boost regulator, seven LDO regulators, and a DDR voltage reference. The VR5100 operates from an input voltage of up to 4.5 V. Output voltage, startup sequence, and other functions are set using integrated one time programmable (OTP) memory, thus providing flexibility and reducing external component count.

8.2 Power generation

The buck regulators in the VR5100 provide supply to the processor cores and to other voltage domains, such as I/O and memory. Dynamic voltage scaling is provided to allow controlled supply rail adjustments for the processor cores and other circuitry. The linear regulators in the VR5100 can be used as general purpose regulators to power peripherals and lower power processor rails.

The VSD LDO regulator supports the dual voltage requirement by high speed SD card readers. Depending on the system power path configuration, the LDO regulators can be directly supplied from the main input supply or from the switching regulators to power peripherals, such as audio, camera, Bluetooth, and Wireless LAN, etc.

Table 30 shows a summary of the voltage regulators in the VR5100.

Table 30. VR5100 power tree

Supply	Output voltage (V)	Programming step size (mV)	Maximum load current (mA)
SW1	0.70 to 1.425 1.8 to 3.3	25 (N/A)	3800
SW2	1.50 to 1.85 2.50 to 3.30	50 variable	1250
SW3	0.90 to 1.65	50	1500
SWBST	5.00 to 5.15	50	600
LDO1	1.8 to 3.3	50	100
LDO2	0.80 to 1.55	50	250
VSD	1.85	50	100
V33	2.85 to 3.30	150	350
LDO3	1.8 to 3.3	100	100
LDO4	1.8 to 3.3	100	350
VSNVS	3.0	NA	1.0
REFOUT	0.5*SW3_OUT	NA	10

8.3 Functional description

8.3.1 Control logic and interface signals

The VR5100 is fully programmable via the I^2C interface. Additional communication is provided by direct logic interfacing including INTB, PORB, STBY, EN, and SD_VSEL. Refer to Table 24 for logic levels for these pins.

All information provided in this document is subject to legal disclaimers.

© 2026 NXP B.V. All rights reserved.

8.3.1.1 EN

EN is an input signal to the IC which generates a turn-on event. A turn-on event brings the VR5100 out of OFF and Sleep modes and into the ON mode. Refer to Section 8.5 for the various modes (states) of operation of the IC. The EN pin can be configured using OTP to detect a level, or an edge using the EN_CFG bit.

- If EN_CFG = 0, the EN signal is high and VIN > UVDET, the PMIC turns on; the interrupt and sense bits, ENI and ENS respectively, is set.
- If EN_CFG = 1, VIN > UVDET and EN transitions from high to low, the PMIC turns on; the interrupt and sense bits, ENI and ENS respectively, is set.

Any regulator enabled in the Sleep mode remains enabled when transitioning from Sleep to ON, i.e., the regulator is not turned off and then on again to match the start-up sequence.

When EN_CFG = 1, the EN input can be a mechanical switch debounced through a programmable debouncer ENDBNC[1:0], to avoid a response to a very short key press. The interrupt is generated for both the falling and the rising edge of the EN pin. By default, a 31.25 ms interrupt debounce is applied to both falling and rising edges. The falling edge debounce timing can be extended with ENDBNC[1:0] as defined in the table below. The interrupt is cleared by software, or when cycling through the OFF mode.

Table 31. EN hardware debounce bit settings

The sense bit, ENS, is not debounced and follows the state of the EN pin

Bits	State	Turn on debounce (ms)	Falling edge INT debounce (ms)	Rising edge INT debounce (ms)
ENDBNC[1:0]	00	0.0	31.25	31.25
	01	31.25	31.25	31.25
	10	125	125	31.25
	11	750	750	31.25

8.3.1.2 STBY

STBY is an input signal to the IC. When it is asserted the part enters standby mode and when de-asserted, the part exits standby mode. STBY can be configured as active high or active low using the STBYINV bit. See Standby mode for more details.

Note: When operating the PMIC at V_{IN} ≤ 2.85 V a coin cell must be present to provide V_{SNVS}, or the PMIC does not reliably enter and exit the STANDBY mode.

8.3.1.3 SD_VSEL

SD_VSEL is an input pin which sets the output voltage range of the VSD regulator. When SD_VSEL = HIGH, the VSD regulator operates in the lower output voltage range. When SD_VSEL = LOW, the VSD regulator operates in the higher output voltage range. The SD_VSEL input buffer is powered by the VCCI2C supply. When a valid VCCI2C voltage is not present, the output of the SD_VSEL buffer defaults to a logic high thus keeping the VSD regulator output in the lower voltage range.

8.3.2 One-time-programmable memory

One-time-programmable memory is used to store key startup parameters and regulators' configuration information. This eliminates the need to set regulator voltage and sequence using external components. The following parameters are programmable in the VR5100.

- **General:** I^2C slave address, EN pin configuration, PORB configuration
- **Buck regulators:** Output voltage, switching frequency, regulator start-up sequence and timing

All information provided in this document is subject to legal disclaimers.

© 2026 NXP B.V. All rights reserved.

- **Boost regulator and LDOs:** Output voltage, regulator start-up sequence and timing

The VR5100 starts up based on the contents of the TBBOTP registers. During power up, contents of the OTP memory are loaded on to the TBBOTP registers. There is an optional Try-before-buy mode of operation available which bypasses loading of the OTP memory onto the TBBOTP registers. Instead, regulators directly start up based on the current contents of the TBBOTP registers during this mode of operation. This mode is useful when trying to determine a suitable OTP configuration for the system. TBB mode can also be used in lieu of OTP programming provided a microcontroller can initiate the TBB sequence is available in the system.

8.3.2.1 Register naming convention

Register and bit names for the TBBOTP registers are prefixed with OTP. This is to differentiate them from functional registers, which are responsible for real-time control of regulator settings. For example, OTP_SW1_VOLT refers to the TBBOTP register associated with the voltage setting for SW1 regulator. SW1VOLT refers to the functional register which is fed into the SW1 regulator block. During power up, contents of the OTP fuses are copied onto the OTP_SW1_VOLT register which is further copied on to the SW1VOLT register. During normal operation, writes to the OTP_SW1_VOLT register has no effect on the output voltage of the SW1 regulator. Writes to the SW1VOLT register do have an effect.

8.3.2.2 Regulator startup sequence programming

Each regulator has 3-bits or 4-bits allocated to program its start-up time slot from a turn-on event; therefore, each can be placed from position one to seven or one to fifteen in the start-up sequence as shown in Table 32. When the sequence is code is set to 0, the regulator remains off during the startup sequence. It can be enabled using I^2C after the start up sequence is completed. The delay between each position can be programmed to be 0.5 ms or 2.0 ms as shown in Table 33. The start-up sequence terminates at the last programmed regulator. PORB pin is de-asserted HIGH 2.0 ms after the last utilized startup slot.

Table 32. Start-up sequence

OTP_SWx_SEQ[2:0]/ OTP_V33_SEQ[2:0]/ OTP_VSD_SEQ[2:0]	OTP_LDOx_SEQ[3:0]	Sequence
000	0000	Off
001	0001	SEQ_CLK_SPEED * 1
010	0010	SEQ_CLK_SPEED * 2
011	0011	SEQ_CLK_SPEED * 3
100	0100	SEQ_CLK_SPEED * 4
101	0101	SEQ_CLK_SPEED * 5
110	0110	SEQ_CLK_SPEED * 6
111	0111	SEQ_CLK_SPEED * 7
—	1000	SEQ_CLK_SPEED * 8
—	1001	SEQ_CLK_SPEED * 9
—	1010	SEQ_CLK_SPEED * 10
—	1011	SEQ_CLK_SPEED * 11
—	1100	SEQ_CLK_SPEED * 12
—	1101	SEQ_CLK_SPEED * 13
—	1110	SEQ_CLK_SPEED * 14
—	1111	SEQ_CLK_SPEED * 15

All information provided in this document is subject to legal disclaimers.

© 2026 NXP B.V. All rights reserved.

Table 33. Start-up sequence clock speed

SEQ_CLK_SPEED	Time (µs)
0	500
1	2000

8.3.2.3 EN pin configuration

The EN pin can be configured as either a level sensitive input (EN_CFG = 0), or as an edge sensitive input (EN_CFG = 1). As a level sensitive input, an active high signal turns on the part and an active low signal turns off the part, or puts it into Sleep mode. As an edge sensitive input, such as when connected to a mechanical switch, a falling edge turns on the part and if the switch is held low for greater than or equal to 4.0 seconds, the part turns off or enters Sleep mode.

Table 34. EN configuration

EN_CFG	Mode
0	EN pin HIGH = ON EN pin LOW = OFF or Sleep mode
1	EN pin pulled LOW momentarily = ON EN pin LOW for 4.0 seconds = OFF or Sleep mode

8.3.2.4 I^2C address configuration

The I^2C device address can be programmed from 0x08 to 0x0F. This allows flexibility to change the I^2C address to avoid bus conflicts. Address bit, I2C_SLV_ADDR[3] in OTP_I2C_ADDR register is hard coded to "1" while the lower three LSBs of the I^2C address (I2C_SLV_ADDR[2:0]) are programmable as shown in Table 35. The I^2C address of the VR5100 immediately changes after write instructions to the OTP_I2C_ADDR register are complete. To continue using the default address of 0x08, set bit 7 (USE_DEFAULT_ADD) of the OTP_I2C_ADDR register.

Table 35. I^2C address configuration

I2C_SLV_ADDR[3] hard coded	I2C_SLV_ADDR[2:0]	I^2C device address (Hex)
1	000	0x08
1	001	0x09
1	010	0x0A
1	011	0x0B
1	100	0x0C
1	101	0x0D
1	110	0x0E
1	111	0x0F

8.3.2.5 Buck regulator soft start ramp rate

The start-up ramp rate ramp rate or soft start ramp rate of buck regulators can be chosen by using the SWDVS_CLK bit during OTP.
Table 36 shows the startup ramp rate options for the buck regulators in the VR5100.

All information provided in this document is subject to legal disclaimers.

© 2026 NXP B.V. All rights reserved.

Table 36. DVS speed selection for SWx

SWDVS_CLK	Function
0	25 mV step each 2.0 µs
1	25 mV step each 4.0 µs

8.3.3 Start-up

Regulators in the VR5100 start up based on the contents of the TBBOTP registers. During cold start, contents from the OTP memory are loaded into the TBBOTP registers when VIN > UVDET. Contents of the TBBOTP registers are reloaded from the fuses during a turn-on event.

The VR5100 is available in a number of pre-programmed flavors to suit a wide variety of system configurations. Refer to Table 37 for programming details of the different flavors. Refer to Section 8.3.2 for a detailed explanation of the OTP block.

Table 37. Start-up configuration

This table specifies the default output voltage of the LDOs and SWx after start-up and/or when the LDOs and SWx are enabled. REFOUT_SEQ is internally fixed to be same as SW3_SEQ. VSD voltage depends on the state of the SD_VSEL pin.

OTP registers	Non-programmed	Pre-programmed OTP configuration	
	A0	A1	A2
Default I^2C Address	0x08	0x08	0x08
OTP_VSNVS_VOLT	1.0 V	3.0 V	3.0 V
OTP_SW1_VOT	0.7 V	0.9 V	1.8 V
OTP_SW1_SEQ	OFF	2	1
OTP_SW2_VOLT	1.5 V	1.8 V	1.8 V
OTP_SW2_SEQ	OFF	1	OFF
OTP_SW3_VOLT	0.9 V	1.35 V	0.9 V
OTP_SW3_SEQ	OFF	1	2
OTP_SWBST_VOLT	5.0 V	5.0 V	5.0 V
OTP_SWBST_SEQ	OFF	OFF	OFF
OTP_LDO1_VOLT	1.8 V	1.8 V	3.0 V
OTP_LDO1_SEQ	OFF	OFF	2
OTP_LDO2_VOLT	0.8 V	1.55 V	0.8 V
OTP_LDO2_SEQ	OFF	1	2
OTP_LDO3_VOLT	1.8 V	3.3 V	3.0 V
OTP_LDO3_SEQ	OFF	1	3
OTP_LDO4_VOLT	1.8 V	2.5 V	2.5 V
OTP_LDO4_SEQ	OFF	9	2
OTP_V33_VOLT	2.85 V	3.3 V	3.0 V
OTP_V33_SEQ	OFF	1	6
OTP_VSD_VOLT	1.80 V	3.3 V	3.3 V
OTP_VSD_SEQ	OFF	1	OFF

All information provided in this document is subject to legal disclaimers.

© 2026 NXP B.V. All rights reserved.

Table 37. Start-up configuration*...continued*

This table specifies the default output voltage of the LDOs and SWx after start-up and/or when the LDOs and SWx are enabled. REFOUT_SEQ is internally fixed to be same as SW3_SEQ. VSD voltage depends on the state of the SD_VSEL pin.

OTP registers	Non-programmed	Pre-programmed OTP configuration	
	A0	A1	A2
OTP_SEQ_CLK_SPEED	500 µs	2000 µs	2000 µs
OTP_SWDVS_CLK	12.5 mV/µs	12.5 mV/µs	12.5 mV/µs
OTP_EN_CFG	Level sensitive	Level sensitive	Level sensitive
OTP_SW1_FREQ	2.0 MHz	2.0 MHz	2.0 MHz
OTP_SW2_FREQ	2.0 MHz	2.0 MHz	2.0 MHz
OTP_SW3_FREQ	2.0 MHz	2.0 MHz	2.0 MHz
OTP_PG_EN	PORB in Default mode	PORB in Default mode	PORB in Default mode

8.3.3.1 Start-up timing diagram

The startup timing of the regulators is programmable through OTP and seq_clk_speed. Figure 5 shows the startup timing of the regulators as determined by their OTP sequence. The trimmed 32 kHz clock controls all the start-up timing.

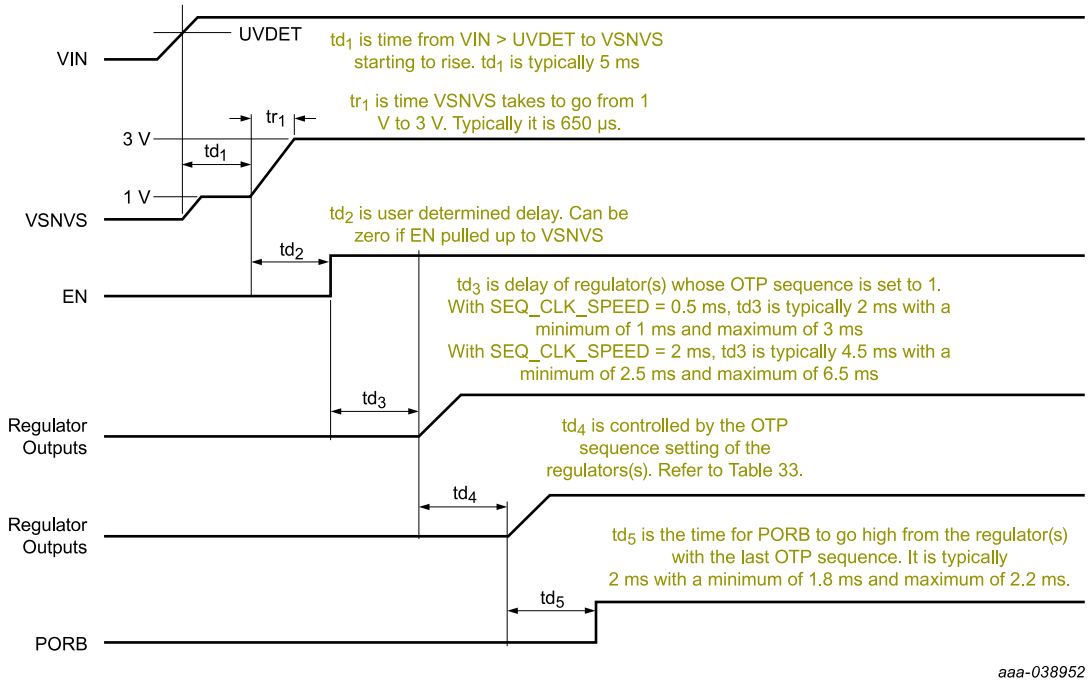

Figure 5. Start-up timing diagram

8.3.4 16 MHz and 32 MHz clocks

The VR5100 incorporates two clocks: a trimmed 16 MHz RC oscillator and an untrimmed 32 kHz RC oscillator. The 32 kHz untrimmed clock is only used in the following conditions:

- V_{IN} < UVDET
- All regulators are in SLEEP mode

All information provided in this document is subject to legal disclaimers.

© 2026 NXP B.V. All rights reserved.

- All regulators are in PFM switching mode

A 32 kHz clock, derived from the 16 MHz trimmed clock, is used when accurate timing is needed under the following conditions:

- During start-up, V_{IN} > UVDET
- EN_CFG = 1, for power button debounce timing

When the 16 MHz is active in the ON mode, the debounce times are referenced to the 32 kHz derived from the 16 MHz clock. The exceptions are the LOWVINI and ENI interrupts, which are referenced to the 32 kHz untrimmed clock. Switching frequency of the switching regulators is derived from the trimmed 16 MHz clock.

The 16 MHz clock and hence the switching frequency of the regulators, can be adjusted to improve the noise integrity of the system. By changing the factory trim values of the 16 MHz clock, the user may add an offset as small as #3.0% of the nominal frequency. Contact your NXP representative for detailed information on this feature.

8.3.5 Internal core voltages

All regulators use the main bandgap as the reference. The main bandgap is bypassed with a capacitor at VBG. VDIG is a 1.5 V regulator which powers all the digital logic in the VR5100. VDIG is regulated at 1.28 V in Off and Coin Cell modes. The VCC supply is used to bias internal analog rails and the OTP fuses. No external DC loading is allowed on VCC, VDIG, or VBG. VDIG is kept powered as long as there is a valid supply

8.3.6 REFOUT voltage reference

REFOUT is an internal PMOS half supply voltage follower capable of supplying up to 10 mA. The output voltage is at one half the input voltage. It is typically used as the reference voltage for DDR memories. A filtered resistor divider is utilized to create a low frequency pole. This divider then uses a voltage follower to drive the load.

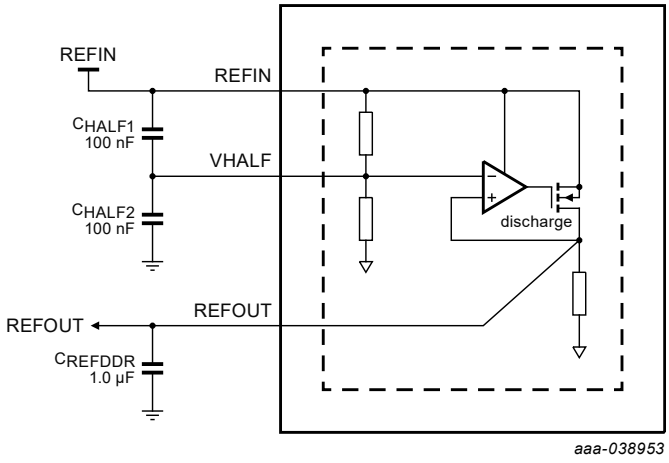

Figure 6. REFOUT block diagram

8.3.6.1 REFOUT external components

Table 38. REFOUT external components [1]

Capacitor	Capacitance (µF)
REFIN [2] to VHALF	0.1
VHALF to GND	0.1
REFOUT	1.0

All information provided in this document is subject to legal disclaimers.

© 2026 NXP B.V. All rights reserved.

[1] Use X5R or X7R capacitors
[2] REFIN to GND, 1.0 µF minimum capacitance is provided by buck regulator output

8.3.7 Buck regulators

The VR5100 integrates three independent buck regulators: SW1, SW2, and SW3. Output of the buck regulators during start up is programmable through OTP. Each regulator has associated registers controlling its output voltage during On, Standby, and Sleep modes. During start-up, contents of the OTP_SWx_VOLT register is copied onto the SWxVOLT[4:0], SWxSTBY[4:0] and SWxOFF[4:0]. After boot up, contents of the SWxVOLT, SWxSTBY and SWxOFF registers can be set through I^2C to set the output voltage during On, Standby, and Sleep modes respectively.

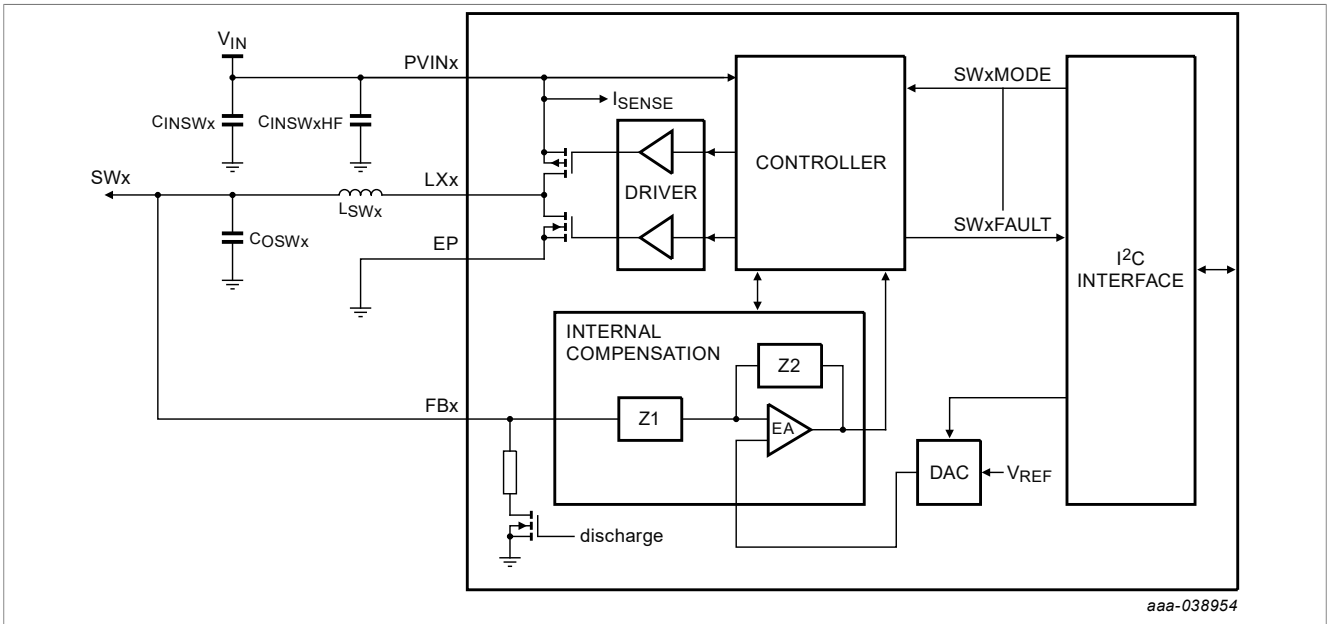

Figure 7. Generic SWx block diagram

Table 39. SWx regulators external components

Components	Description	Values
CINSWx	SWx input capacitor	4.7 µF
CINSWxHF	SWx decoupling input capacitor	0.1 µF
COSWx	SWx output capacitor	2 x 22 µF (10 V or higher voltage rated capacitors) or 3 x 22 µF (6.3 V rated capacitors)
LSWx	SWx inductor	1.5 µH
Use X5R or X7R capacitors with voltage rating at least two times the nominal voltage.		

8.3.7.1 Switching modes

To improve system efficiency the buck regulators can operate in different switching modes. Changing between switching modes can occur by any of the following means: I^2C programming, exiting/entering the Standby mode, exiting/entering Sleep mode, and load current variation. Available switching modes for buck regulators are presented in Table 40.

All information provided in this document is subject to legal disclaimers.

© 2026 NXP B.V. All rights reserved.

Table 40. Switching mode description

Mode	Description
OFF	The regulator is switched off and the output voltage is discharged using an internal resistor
PFM	In this mode, the regulator operates in forced PFM mode. The main error amplifier is turned off and a hysteretic comparator is used to regulate output voltage. Use this mode for load currents less than 50 mA.
PWM	In this mode, the regulator operates in forced PWM mode.
APS	In this mode, the regulator operates in pulse skipping mode at light loads and switches over to PWM modes for heavier load conditions. This is the default mode in which the regulators power up during a turn-on event.

During soft-start of the buck regulators, the controller transitions through the PFM, APS, and PWM switching modes. 3.0 ms after the output voltage reaches regulation, the controller transitions to the selected switching mode. Depending on the particular switching mode selected, additional ripple may be observed on the output voltage rail as the controller transitions between switching modes. The operating mode of the regulator in On and Standby Modes is controlled using the SWxMODE[3:0] bits associated with each regulator. Table 41 summarizes the Buck regulator programmability for Normal and Standby modes.

Table 41. Regulator mode control

SWxMODE[3:0]	Normal mode	Standby mode
0000	Off	Off
0001	PWM	Off
0010	Reserved	Reserved
0011	PFM	Off
0100	APS	Off
0101	PWM	PWM
0110	PWM	APS
0111	Reserved	Reserved
1000 (default)	APS	APS
1001	Reserved	Reserved
1010	Reserved	Reserved
1011	Reserved	Reserved
1100	APS	PFM
1101	PWM	PFM
1110	Reserved	Reserved
1111	Reserved	Reserved

Transitioning between Normal and Standby modes can affect a change in switching modes as well as output voltage. When in Standby mode, the regulator outputs the voltage programmed in its standby voltage register and operates in the mode selected by the SWxMODE[3:0] bits. Upon exiting Standby mode, the regulator returns to its normal switching mode and its output voltage programmed in its voltage register.

Any regulators whose SWxOMODE bit is set to 1 enters Sleep mode if a EN turn-off event occurs, and any regulator whose SWxOMODE bit is set to 0 is turned off. In Sleep mode, the regulator outputs the voltage programmed in SWxOFF registers and operates in the PFM mode. The regulator exits the Sleep mode when a turn-on event occurs. Any regulator whose SWxOMODE bit is set to 1 remains on and changes to its normal

All information provided in this document is subject to legal disclaimers.

© 2026 NXP B.V. All rights reserved.

configuration settings when exiting the Sleep state to the ON state. Any regulator whose SWxOMODE bit is set to 0 is powered up with the same delay in the start-up sequence as when powering ON from Off. At this point, the regulator returns to its default ON state output voltage and switch mode settings. When Sleep mode is activated by the SWxOMODE bit, the regulator uses the set point as programmed by SW1OFF[4:0] for SW1 and by SW2OFF[2:0] for SW2, and SW3OFF[3:0] for SW3.

8.3.7.2 Dynamic voltage scaling

To reduce overall power consumption, processor core voltages can be varied depending on the mode or activity level of the processor.

1. Normal operation: The output voltage is selected by I^2C bits SW1[4:0] for SW1 and SW2[2:0] for SW2, and SW3[3:0] for SW3. A voltage transition initiated by I^2C is governed by the DVS stepping rates shown in Table 42 .
2. Standby mode: The output voltage can be selected by I^2C bits SW1STBY[4:0] for SW1 and by bits SW2STBY[2:0] for SW2, and SW3STBY[3:0] for SW3. Voltage transitions initiated by a Standby event are governed by the DVS stepping rates shown in Table 42 .
3. Sleep mode: The output voltage can be higher or lower than in normal operation, but is typically selected to be the lowest state retention voltage of a given processor; it is selected by I^2C bits SW1OFF[4:0] for SW1 and by bits SW2OFF[2:0] for SW2, and SW3OFF[3:0] for SW3. Voltage transitions initiated by a turn-off event are governed by the DVS stepping rates shown in Table 42 .

Table 42. DVS speed selection for SWx

SWxDVSSPEED	Function
0	25 mV step each 2.0 µs
1	25 mV step each 4.0 µs

The regulators have a strong sourcing capability and sinking capability in PWM mode, therefore the fastest rising and falling slopes are determined by the regulator in PWM mode. However, if the regulators are programmed in PFM or APS mode during a DVS transition, the falling slope can be influenced by the load. Additionally, as the current capability in PFM mode is reduced, controlled DVS transitions in PFM mode could be affected. Critically timed DVS transitions are best assured with PWM mode operation.

Figure 8 shows the general behavior for the regulators when initiated with I^2C programming, or standby control. During the DVS period the overcurrent condition on the regulator should be masked.

All information provided in this document is subject to legal disclaimers.

© 2026 NXP B.V. All rights reserved.

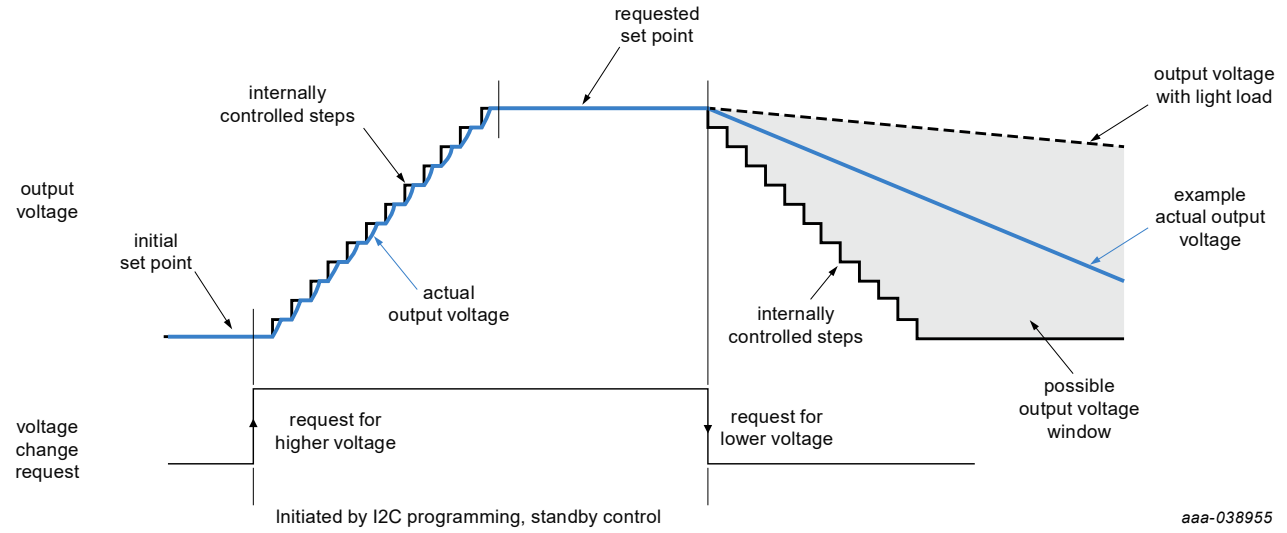

Figure 8. Voltage stepping with DVS

8.3.7.3 Regulator phase clock

The SWxPHASE[1:0] bits select the phase of the regulator clock as shown in Table 43 . By default, each regulator is initialized at 90 ° out of phase with respect to each other. For example, SW1 is set to 0 °, SW2 is set to 90 °, and SW3 is set to 180 ° by default at power up.

Table 43. Regulator phase clock selection

SWxPHASE[1:0]	Phase of clock sent to regulator (degrees)
00	0
01	90
10	90
11	270

The SWxFREQ[1:0] register is used to set the desired switching frequency for each one of the buck regulators. Table 45 shows the selectable options for SWxFREQ[1:0]. For each frequency, all phases are available, this allows regulators operating at different frequencies to have different relative switching phases. However, not all combinations are practical. For example, 2.0 MHz, 90 ° and 4.0 MHz, 180 ° are the same in terms of phasing. Table 44 shows the optimum phasing when using more than one switching frequency.

Table 44. Optimum phasing

Frequencies	Optimum phasing
1.0 MHz 2.0 MHz	0° 180°
1.0 MHz 4.0 MHz	0° 180°
2.0 MHz 4.0 MHz	0° 180°
1.0 MHz 2.0 MHz 4.0 MHz	0° 90° 90°

All information provided in this document is subject to legal disclaimers.

© 2026 NXP B.V. All rights reserved.

Table 45. Regulator Frequency Configuration

SWxFREQ[1:0]	Frequency
00	1.0 MHz
01	2.0 MHz (default)
10	4.0 MHz
11	Reserved

8.3.7.4 SW1

SW1 is a 3.8 A current capability for high current applications. The feedback and all other controls are accomplished by use of pin FB1 and SW1 control registers, respectively.

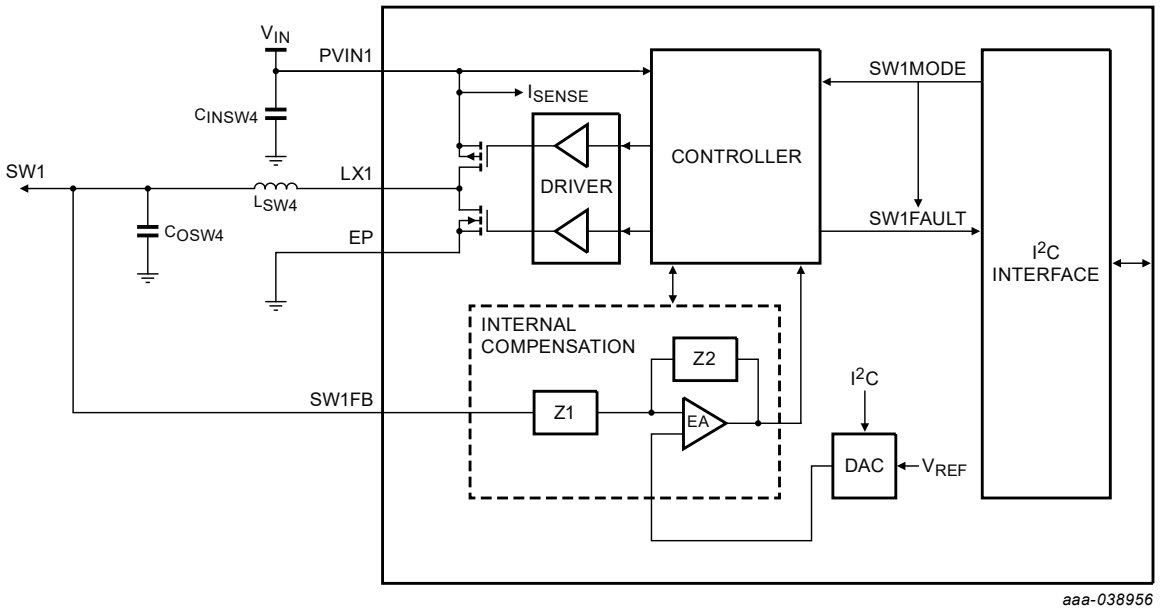

Figure 9. SW1 diagram

8.3.7.5 SW1 setup and control registers

SW1 output voltage is programmable from 0.700 V to 1.425 V in steps of 25 mV. They can additionally be programmed at 1.8 V or 3.3 V. The output voltage set point is independently programmed for Normal, Standby, and Sleep mode by setting the SW1[4:0], SW1STBY[4:0], and SW1OFF[4:0] bits respectively. Table 46 shows the output voltage coding for SW1. Values shown in Table 46 are also to be used during OTP programming by setting the OTP_SW1_VOLT register appropriately.

Table 46. SW1 output voltage configuration

Set point	SW1[4:0] SW1STBY[4:0] SW1OFF[4:0]	SW1 output (V)	Set point	SW1[4:0] SW1STBY[4:0] SW1OFF[4:0]	SW1 output (V)
0	00000	0.700	16	10000	1.100
1	00001	0.725	17	10001	1.125
2	00010	0.750	18	10010	1.150
3	00011	0.775	19	10011	1.175

All information provided in this document is subject to legal disclaimers.

© 2026 NXP B.V. All rights reserved.

Table 46. SW1 output voltage configuration *...continued*

Set point	SW1[4:0] SW1STBY[4:0] SW1OFF[4:0]	SW1 output (V)	Set point	SW1[4:0] SW1STBY[4:0] SW1OFF[4:0]	SW1 output (V)
4	00100	0.800	20	10100	1.200
5	00101	0.825	21	10101	1.225
6	00110	0.850	22	10110	1.250
7	00111	0.875	23	10111	1.275
8	01000	0.900	24	11000	1.300
9	01001	0.925	25	11001	1.325
10	01010	0.950	26	11010	1.350
11	01011	0.975	27	11011	1.375
12	01100	1.000	28	11100	1.400
13	01101	1.025	29	11101	1.425
14	01110	1.050	30	11110	1.8
15	01111	1.075	31	11111	3.3

Table 47 provides a list of registers used to configure and operate SW1 regulator.

Table 47. SW1 register summary

Register	Address	Output
SW1VOLT	0x20	SW1 Output voltage set point in normal operation
SW1STBY	0x21	SW1 Output voltage set point on Standby
SW1OFF	0x22	SW1 Output voltage set point on Sleep
SW1MODE	0x23	SW1 Switching mode selector register
SW1CONF	0x24	SW1 DVS, phase, and frequency configuration
SW1CONF	0x32	SW1 DVS, phase, and frequency configuration

8.3.7.6 SW2 setup and control registers

SW2 is a single phase, 1.25 A rated buck regulator. SW2 output voltage is programmable from 1.500 V to 1.850 V in 50 mV steps if the OTP_SW2_HI bit is low or from 2.500 V to 3.300 V in 150 mV steps if the bit OTP_SW2_HI is set high. During normal operation, output voltage of the SW2 regulator can be changed through I^2C only within the range set by the OTP_SW2_HI bit. The output voltage set point is independently programmed for Normal, Standby, and Sleep mode by setting the SW2[2:0], SW2STBY[2:0] and SW2OFF[2:0] bits, respectively. Table 48 shows the output voltage coding valid for SW2.

Table 48. SW2 output voltage configuration

Low output voltage range (OTP_SW2_HI= 0)		High output voltage range (OTP_SW2_HI=1)	
SW2[2:0] SW2STBY[2:0] SW2OFF[2:0]	SW2 output	SW2[2:0] SW2STBY[2:0] SW2OFF[2:0]	SW2 output
000	1.500	000	2.500
001	1.550	001	2.800

All information provided in this document is subject to legal disclaimers.

© 2026 NXP B.V. All rights reserved.

Table 48. SW2 output voltage configuration...*continued*

Low output voltage range (OTP_SW2_HI= 0)		High output voltage range (OTP_SW2_HI=1)	
SW2[2:0] SW2STBY[2:0] SW2OFF[2:0]	**SW2 output**	**SW2[2:0] SW2STBY[2:0] SW2OFF[2:0]**	**SW2 output**
010	1.600	010	2.850
011	1.650	011	3.000
100	1.700	100	3.100
101	1.750	101	3.150
110	1.800	110	3.200
111	1.850	111	3.300

Setup and control of SW2 is done through the I^2C registers listed in Table 49.

Table 49. SW2 register summary

Register	Address	Description
SW2VOLT	0x35	Output voltage set point on normal operation
SW2STBY	0x36	Output voltage set point on Standby
SW2OFF	0x37	Output voltage set point on Sleep
SW2MODE	0x38	Switching Mode selector register
SW2CONF	0x39	DVS, Phase, Frequency, and ILIM configuration

8.3.7.7 SW3 setup and control registers

SW3 output voltage is programmable from 0.90 V to 1.65 V in 50 mV steps to support different types of DDR memory as listed in Table 50.

Table 50. SW3 output voltage configuration

SW3[3:0]	SW3 output (V)	SW3[3:0]	SW3 output (V)
0000	0.90	1000	1.30
0001	0.95	1001	1.35
0010	1.00	1010	1.40
0011	1.05	1011	1.45
0100	1.10	1100	1.50
0101	1.15	1101	1.55
0110	1.20	1110	1.60
0111	1.25	1111	1.65

Table 51 provides a list of registers used to configure and operate SW3.

Table 51. SW3 register summary

Register	Address	Output
SW3VOLT	0x3C	SW3 Output voltage set point on normal operation
SW3STBY	0x3D	SW3 Output voltage set point on Standby

All information provided in this document is subject to legal disclaimers.

© 2026 NXP B.V. All rights reserved.

Table 51. SW3 register summary...*continued*

Register	Address	Output
SW3OFF	0x3E	SW3 Output voltage set point on Sleep
SW3MODE	0x3F	SW3 Switching mode selector register
SW3CONF	0x40	SW3 DVS, phase, frequency and ILIM configuration

8.3.8 Boost regulator

SWBST is a boost regulator with a programmable output from 5.0 V to 5.15 V. SWBST can supply the VUSB regulator for the USB PHY in OTG mode, as well as the VBUS voltage. Note that the parasitic leakage path for a boost regulator causes the SWBSTOUT and FBBST voltage to be a Schottky drop below the input voltage whenever SWBST is disabled. A load switch is recommended on the output path to isolate the output for applications where this is not desired. The switching NMOS transistor is integrated on-chip. Figure 10 shows the block diagram and component connection for the boost regulator.

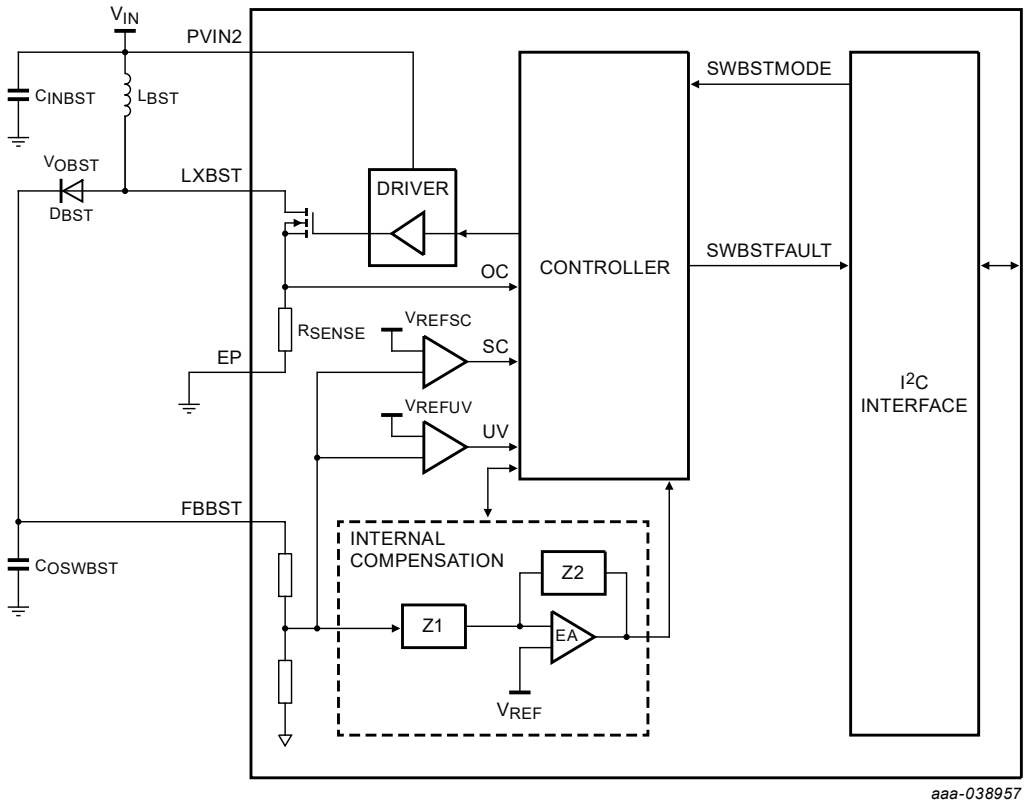

Figure 10. Boost regulator architecture

8.3.8.1 SWBST setup and control

Boost regulator control is done through a single register SWBSTCTL described in Table 52. SWBST is included in the power-up sequence if its OTP power-up timing bits, OTP_SWBST_SEQ[2:0], are not all zeros.

Table 52. Register SWBSTCTL - ADDR 0x66

Name	Bit #	R/W	Default	Description
SWBST1VOLT	1:0	R/W	0b00	Set the output voltage for SWBST 00 = 5.000 V

All information provided in this document is subject to legal disclaimers.

© 2026 NXP B.V. All rights reserved.

Table 52. Register SWBSTCTL - ADDR 0x66*...continued*

Name	Bit #	R/W	Default	Description
				01 = 5.050 V 10 = 5.100 V 11 = 5.150 V
SWBST1MODE	3:2	R	0b10	Set the Switching mode on Normal operation 00 = OFF 01 = PFM 10 = Auto (Default) [1] 11 = APS
UNUSED	4	—	0b0	UNUSED
SWBST1STBYMODE	6:5	R/W	0b10	Set the Switching mode on Standby 00 = OFF 01 = PFM 10 = Auto (Default)[1] 11 = APS
UNUSED	7	—	0b0	UNUSED

[1] In Auto mode, the controller automatically switches between PFM and APS modes depending on the load current. Regulator switches in Auto mode if enabled in the startup sequence.

8.3.8.2 SWBST external components

Table 53. SWBST external component requirements

Components	Description	Values
C_{INBST}[1]	SWBST input capacitor	10 µF
$C_{INBSTHF}$[1]	SWBST decoupling input capacitor	0.1 µF
C_{OSWBST}[1]	SWBST output capacitor	2 x 22 µF
L_{SBST}	SWBST inductor	2.2 µH
D_{BST}	SWBST boost diode	1.0 A, 20 V Schottky

[1] Use X5R or X7R capacitors

8.3.9 LDO regulators description

This section describes the LDO regulators provided by the VR5100. All regulators use the main bandgap as reference. When a regulator is disabled, the output is discharged by an internal pull-down resistor.

All information provided in this document is subject to legal disclaimers.

© 2026 NXP B.V. All rights reserved.

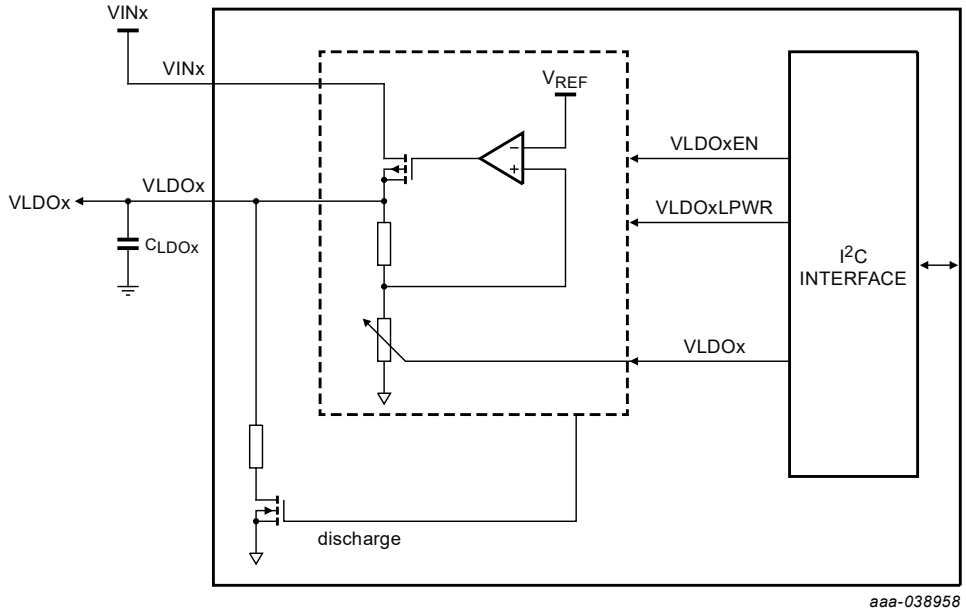

Figure 11. General LDO block diagram

8.3.9.1 External components

Table 54 lists the typical component values for the general purpose LDO regulators.

Table 54. LDO external components

Regulator	Output capacitor (µF)[1]
LDO1	2.2
LDO2	4.7
LDO3	2.2
LDO4	4.7
V33	4.7
VSD	2.2

[1] Use X5R/X7R ceramic capacitors

8.3.9.2 Current limit protection

All the LDO regulators in the VR5100 have current limit protection. In the event of an overload condition, the regulators transitions from a voltage regulator to a current regulator regulating output current per the current limit threshold.

Additionally, if the REGSCPEN bit in Table 117 is set, the LDO is turned off if the current limit event lasts for more than 8.0 ms. The LDO is disabled by resetting its LDOxEN bit, while at the same time, an interrupt LDOxFAULTI is generated to flag the fault to the system processor. The LDOxFAULTI interrupt is maskable through the LDOxFAULTM mask bit. By default, the REGSCPEN is not set; therefore, at start-up none of the regulators is disabled if an overloaded condition occurs. A fault interrupt, LDOxFAULTI, is generated in an overload condition regardless of the state of the REGSCPEN bit.

All information provided in this document is subject to legal disclaimers.

© 2026 NXP B.V. All rights reserved.

8.3.9.3 LDO voltage control

Each LDO is fully controlled through its respective LDOxCTL register. This register enables the user to set the LDO output voltage according to Table 55 for LDO1 and LDO2; and uses the voltage set point on Table 56 for LDO3 and LDO4. Table 57 lists the voltage set points for the V33 LDO. During power-up, contents of the OTP_LDO_VOLT register is copied to the LDOxCTL registers.

Table 55. LDO1, LDO2 output voltage configuration

LDO1[3:0] LDO2[3:0]	LDO1 output (V)	LDO2 output (V)
0000	1.80	0.80
0001	1.90	0.85
0010	2.00	0.90
0011	2.10	0.95
0100	2.20	1.00
0101	2.30	1.05
0110	2.40	1.10
0111	2.50	1.15
1000	2.60	1.20
1001	2.70	1.25
1010	2.80	1.30
1011	2.90	1.35
1100	3.00	1.40
1101	3.10	1.45
1110	3.20	1.50
1111	3.30	1.55

Table 56. LDO3, LDO4 output voltage configuration

LDO3[3:0] LDO4[3:0]	LDO3 or LDO4 output (V)
0000	1.80
0001	1.90
0010	2.00
0011	2.10
0100	2.20
0101	2.30
0110	2.40
0111	2.50
1000	2.60
1001	2.70

All information provided in this document is subject to legal disclaimers.

© 2026 NXP B.V. All rights reserved.

Table 56. LDO3, LDO4 output voltage configuration*...continued*

LDO3[3:0] LDO4[3:0]	LDO3 or LDO4 output (V)
1010	2.80
1011	2.90
1100	3.00
1101	3.10
1110	3.20
1111	3.30

Table 57. V33 output voltage configuration

V33[1:0]	V33 output (V)
00	2.85
01	3.00
10	3.15
11	3.30

Table 58. VSD output voltage configuration

VSD[1:0]	VSD output (V) VSD_VSEL= 0	VSD output (V) VSD_VSEL= 1
00	**2.85**	**1.80**
01	3.00	1.80
10	3.15	1.80
11	3.30	1.85

Along with the output voltage configuration, the LDOs can be enabled or disabled at anytime during normal mode operation, as well as programmed to stay "ON" or be disabled when the PMIC enters Standby mode. Each regulator has associated I^2C bits for this. Table 59 presents a summary of all valid combinations of the control bits on LDOxCTL register and the expected behavior of the LDO output.

Table 59. LDO control

LDOxEN/ V33EN/ VSD	LDOxSTBY/ V33STBY/ VSD	STANDBY [1]	LDOxOUT/ V33OUT/ VSD
0	X	X	Off
1	0	X	On
1	1	0	On
1	1	1	Off

[1] STANDBY refers to a Standby event as described earlier

All information provided in this document is subject to legal disclaimers.

© 2026 NXP B.V. All rights reserved.

8.3.10 VSNVS LDO/Switch

VSNVS powers the low power, SNVS/RTC domain on the processor. It derives its power from either VIN, or coin cell, and cannot be disabled. When powered by both, V_{IN} takes precedence when above the appropriate comparator threshold. When powered by V_{IN}, VSNVS is an LDO capable of supplying 3.0 V. When powered by coin cell, the VSNVS output tracks the coin cell voltage by means of a switch, whose maximum resistance is 100 Ω. In this case, the V_{SNVS} voltage is simply the coin cell voltage minus the voltage drop across the switch, which is 100 mV at a rated maximum load current of 1000 µA.

When the coin cell is applied for the very first time, VSNVS outputs 1.0 V. Only when V_{IN} is applied thereafter does V_{SNVS} transition to its default value. Upon subsequent removal of V_{IN}, with the coin cell attached, V_{SNVS} changes configuration from an LDO to a switch, provided certain conditions are met as described in Table 60 .

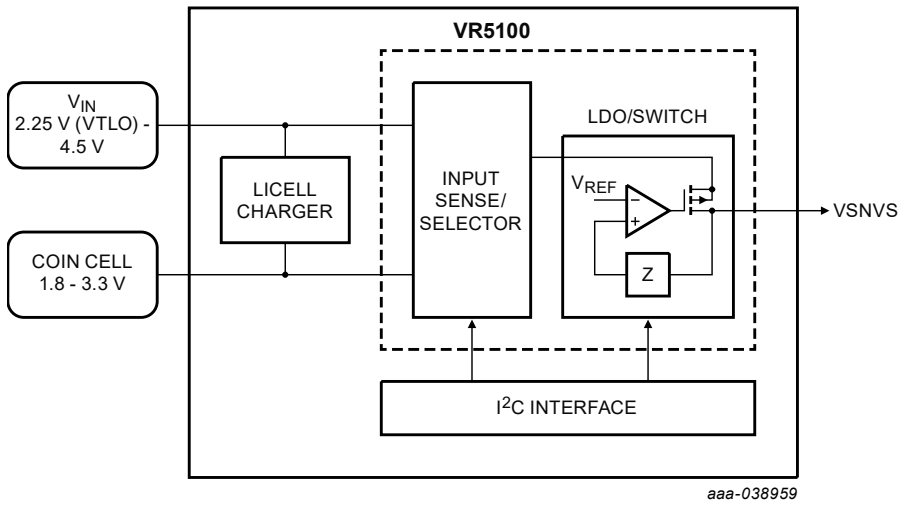

Figure 12. VSNVS LDO/Switch

Table 60 provides a summary of the V_{SNVS} operation at different input voltage V_{IN} and with or without coin cell connected to the system.

Table 60. SNVS modes of operation

VSNVSVOLT[2:0]	110	Mode
110	> VTH1	VIN LDO 3.0 V
110	< VTL1	Coin cell switch

8.3.10.1 VSNVS control

The V_{SNVS} output level is configured through the VSNVSVOLT[2:0] bits on VSNVSCTL register as shown in table Table 61.

Table 61. Register VSNVSCTL - ADDR 0x6B

Name	Bit #	R/W	Default	Description
VSNVSVOLT	2:0	R/W	0b000	Configures VSNVS output voltage [1] 000 = RSVD 001 = RSVD 010 = RSVD 011 = RSVD 100 = RSVD 101 = RSVD

All information provided in this document is subject to legal disclaimers.

© 2026 NXP B.V. All rights reserved.

Table 61. Register VSNVSCTL - ADDR 0x6B*...continued*

Name	Bit #	R/W	Default	Description
				110 = 3.0 V (default) 111 = RSVD
UNUSED	7:3	–	0b00000	UNUSED

[1] Only valid when a valid input voltage is present

8.3.10.2 VSNVS external components

Table 62. VSNVS external components

Capacitor	Value (µF)
VSNVS	0.47

8.3.10.3 Coin cell battery backup

The LICELL pin provides for a connection of a coin cell backup battery or a "super" capacitor. If the voltage at VIN goes below the V_{IN} threshold (VTL1), contact-bounced, or removed, the coin cell maintained logic is powered by the voltage applied to LICELL. The supply for internal logic and the VSNVS rail switches over to the LICELL pin when V_{IN} goes below VTL1, even in the absence of a voltage at the LICELL pin, resulting in clearing of memory and turning off VSNVS. Applications concerned about this behavior can tie the LICELL pin to any system voltage between 1.8 V and 3.0 V. A 0.47 µF capacitor should be placed from LICELL to ground under all circumstances.

8.3.10.4 Coin cell charger control

The coin cell charger circuit functions as a current-limited voltage source, resulting in the CC/CV taper characteristic typically used for rechargeable Lithium-Ion batteries. The coin cell charger is enabled via the COINCHEN bit while the coin cell voltage is programmable through the VCOIN[2:0] bits on register COINCTL on Table 63. The coin cell charger voltage is programmable. In the ON state, the charger current is fixed at ICOINHI. In Sleep and Standby modes, the charger current is reduced to a typical 10 µA. In the OFF state, coin cell charging is not available as the main battery could be depleted unnecessarily. The coin cell charging is stopped when V_{IN} is below UVDET.

Table 63. Coin cell charger voltage

VCOIN[2:0]	V_{COIN} (V) [1]
000	2.50
001	2.70
010	2.80
011	2.90
100	3.00
101	3.10
110	3.20
111	3.30

[1] Coin cell voltages selected based on the type of LICELL used on the system

All information provided in this document is subject to legal disclaimers.

© 2026 NXP B.V. All rights reserved.

Table 64. Register COINCTL - ADDR 0x1A

Name	Bit #	R/W	Default	Description
VCOIN	2:0	R/W	0x00	Coin cell charger output voltage selection. See Table 63 for all options selectable through these bits.
COINCHEN	3	R/W	0x00	Enable or disable the Coin cell charger
UNUSED	7:4	—	0x00	UNUSED

8.3.10.5 External components

Table 65. Coin cell charger external components

Component	Value	Units
LICELL bypass capacitor	100	nF

8.4 Power dissipation

During operation, the temperature of the die should not exceed the operating junction temperature noted in Table 4. To optimize the thermal management and to avoid overheating, the VR5100 provides thermal protection. An internal comparator monitors the die temperature. Interrupts THERM110, THERM120, THERM125, and THERM130 is generated when the respective thresholds specified in Table 66 are crossed in either direction. The temperature range can be determined by reading the THERMxxxS bits in register INTSENSE0.

In the event of excessive power dissipation, thermal protection circuitry shuts down the VR5100. This thermal protection acts above the thermal protection threshold listed in Table 66. To avoid any unwanted power downs resulting from internal noise, the protection is debounced for 8.0 ms. This protection should be considered as a fail-safe mechanism and therefore the system should be configured so this protection is not tripped under normal conditions.

Table 66. Thermal protection thresholds

Parameter	Min.	Typ.	Max.	Units
Thermal 110 °C Threshold (THERM110)	100	110	120	°C
Thermal 120 °C Threshold (THERM120)	110	120	130	°C
Thermal 125 °C Threshold (THERM125)	115	125	135	°C
Thermal 130 °C Threshold (THERM130)	120	130	140	°C
Thermal Warning Hysteresis	2.0	—	4.0	°C
Thermal Protection Threshold	130	140	150	°C

8.5 Modes of operation

8.5.1 State diagram

The operation of the VR5100 can be reduced to five states, or modes: ON, OFF, Sleep, Standby and Coin Cell. Figure 13 shows the state diagram of the VR5100, along with the conditions to enter and exit from each state.

All information provided in this document is subject to legal disclaimers.

© 2026 NXP B.V. All rights reserved.

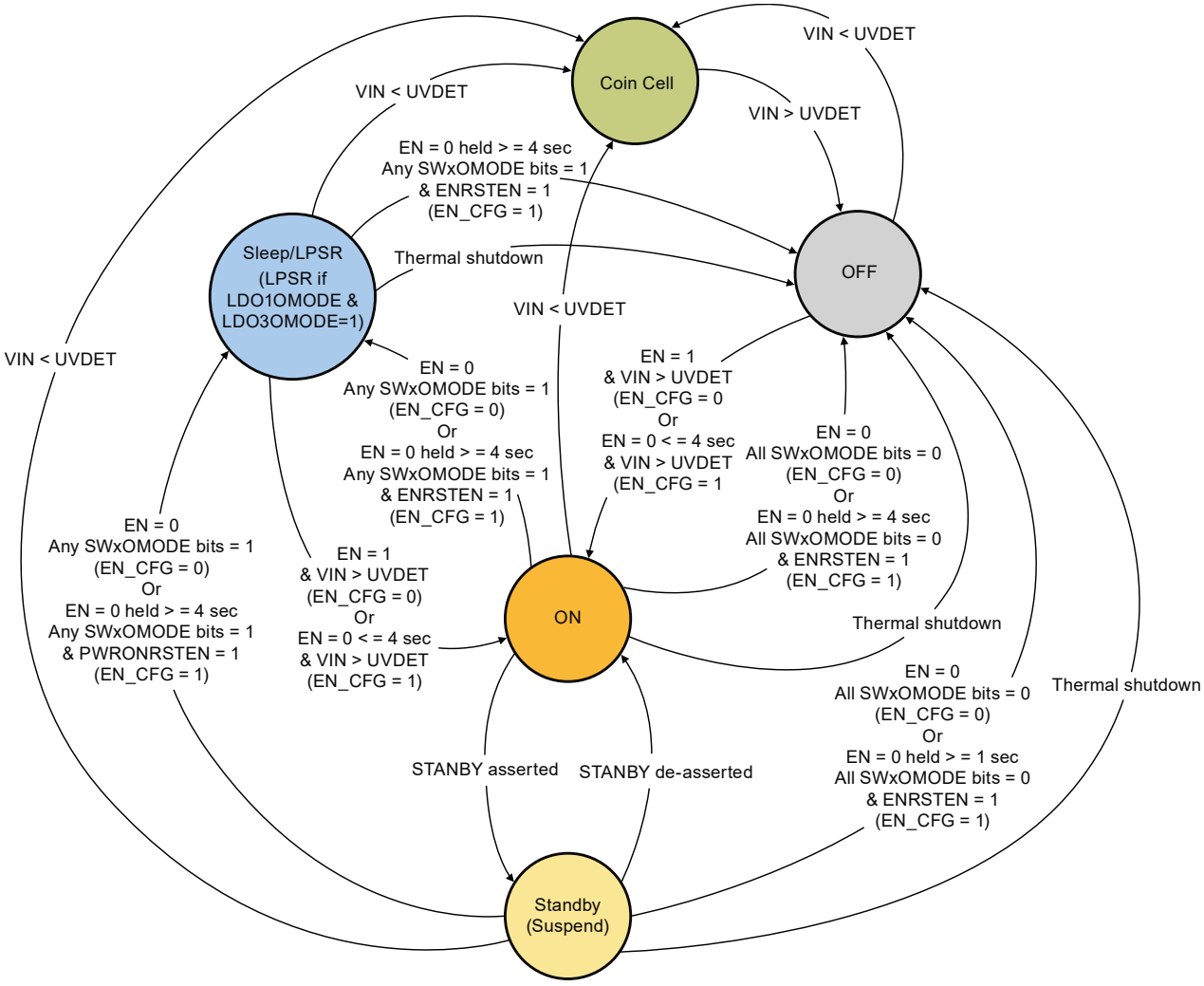

Figure 13. State diagram

To complement the state diagram in Figure 13, a description of the states is provided in following sections. Note that V_{IN} must exceed the rising UVDET threshold to allow a power up. Refer to Table 27 for the UVDET thresholds. Additionally the interrupt signal, INTB, is only active in Sleep, Standby, and ON states.

8.5.1.1 ON mode

The VR5100 enters the On mode after a turn-on event. PORB is de-asserted, and pulled high via an external pull-up resistor, in this mode of operation. To enter the On mode, VIN voltage must surpass the rising UVDET threshold and EN must be asserted. From the On mode, when the voltage at VIN drops below the undervoltage falling threshold, UVDET, the state machine transitions to the Coin Cell mode.

8.5.1.2 OFF mode

The VR5100 enters the Off mode after a turn-off event. Only VDIG and VSNVS are powered in the mode of operation. To exit the Off mode, a valid turn-on event is required. PORB is asserted, LOW, in this mode. Turn off events can be achieved using the EN pin, thermal protection, as described below.

All information provided in this document is subject to legal disclaimers.

© 2026 NXP B.V. All rights reserved.

8.5.1.3 EN pin

The EN pin is used to power off the VR5100. The EN pin can be configured with OTP to power off the PMIC under the following two conditions:

1. EN_CFG bit = 0, SWxOMODE bit = 0 and EN pin is low.
2. EN_CFG bit = 1, SWxOMODE bit = 0, ENRSTEN = 1 and EN is held low for longer than 4.0 seconds. Alternatively, the system can be configured to restart automatically by setting the RESTARTEN bit.

8.5.1.4 Thermal protection

If the die temperature surpasses a given threshold, the thermal protection circuit powers off the PMIC to avoid damage. A turn-on event does not power on the PMIC while it is in thermal protection. The part remains in Off mode until the die temperature decreases below a given threshold. See Power dissipation section for more detailed information.

8.5.1.5 Standby mode

- Depending on STBY pin configuration, Standby is entered when the STBY pin is asserted. This is typically used for Low-power mode of operation.
- When STBY is de-asserted, Standby mode is exited.

A product may be designed to go into a Low-power mode after periods of inactivity. The STBY pin is provided for board level control of going in and out of such deep sleep modes (DSM). When a product is in DSM, it may be able to reduce the overall platform current by lowering the regulator output voltage, changing the operating mode of the regulators or disabling some regulators. The configuration of the regulators in Standby is pre-programmed through the I^2C interface. Note that the STBY pin is programmable for Active High or Active Low polarity, and decoding of a Standby event takes into account the programmed input polarity as shown in Table 67. When the VR5100 is powered up first, regulator settings for the Standby mode are mirrored from the regulator settings for the ON mode. To change the STBY pin polarity to Active Low, set the STBYINV bit via software first, and then change the regulator settings for Standby mode as required. For simplicity, STBY is generally be referred to as active high throughout this document.

Table 67. STBY pin and polarity control

STBY (pin) [1]	STBYINV (I^2C bit) [2]	STBY control [3]
0	0	0
0	1	1
1	0	1
1	1	0

[1] STBY = 0: System is not in Standby, STBY = 1: System is in Standby
[2] The state of the STBY pin only has influence in On mode
[3] Bit 6 in Power Control Register (ADDR - 0x1B)

Since STBY pin activity is driven asynchronously to the system, a finite time is required for the internal logic to qualify and respond to the pin level changes. A programmable delay is provided to hold off the system response to a Standby event. This allows the processor and peripherals some time after a standby instruction has been received to terminate processes to facilitate seamless entering into Standby mode.

When enabled (STBYDLY = 01, 10, or 11) per Table 68, STBYDLY delays the Standby initiated response for the entire IC, until the STBYDLY counter expires. An allowance should be made for three additional 32 kHz cycles required to synchronize the Standby event.

All information provided in this document is subject to legal disclaimers.

© 2026 NXP B.V. All rights reserved.

Table 68. STBY delay - initiated response

STBYDLY[1:0] [1]	Function
00	No delay
01	One 32 kHz period (default)
10	Two 32 kHz periods
11	Three 32 kHz periods

[1] 50. Bits [5:4] in power control register (ADDR - 0x1B)

8.5.1.6 Sleep/LPSR mode

- Depending on EN pin configuration, Sleep mode is entered when EN is de-asserted and SWxOMODE bit is set.
- To exit Sleep mode, assert the EN pin.

In the Sleep mode, the regulator uses the set point as programmed by SW1OFF[3:0] for SW1 and by SWxOFF[2:0] for SW2 and SW3. The activated regulators maintains settings for this mode and voltage until the next turn-on event. Table 69 shows the control bits in Sleep mode. During Sleep mode, interrupts are active and the INTB pin reports any unmasked fault event. If LPSR is activated by requesting VDD_LPSR and VCC_GPIO to stay ON, LDO1 and LDO3 enables in Low-power mode.

Table 69. Regulator mode control

SWxOMODE	Off operational mode (Sleep) [1]
0	Off
1	PFM

[1] For sleep mode, activated switching regulators, should use the Off mode set point as programmed by SW1OFF[4:0] for SW1 and SW2OFF[2:0] for SW2, and SW3OFF[3:0] for SW3.

8.5.1.7 Coin cell mode

In the Coin Cell state, the coin cell is the only valid power source to the PMIC. No turn-on event is accepted in the Coin Cell state. Transition to the OFF state requires V_{IN} surpasses UVDET threshold. PORB is held low in this mode. If the coin cell is depleted, a complete system reset occurs. At the next application of power and the detection of a turn-on event, the system re-initializes with all I^2C bits including, those resetting on COINPORB are restored to their default states.

8.5.2 State machine flow summary

Table 70 provides a summary matrix of the VR5100 flow diagram to show the conditions needed to transition from one state to another.

Table 70. State machine flow summary

STATE		Next state				
		OFF	Coin cell	Sleep	Standby	ON
Initial state	OFF	X	V_{IN} < UVDET	X	X	EN_CFG = 0 EN = 1 & V_{IN} > UVDET or EN_CFG = 1 EN = 0 < 4.0 s & V_{IN} > UNDET

All information provided in this document is subject to legal disclaimers.

© 2026 NXP B.V. All rights reserved.

Table 70. State machine flow summary*...continued*

STATE		Next state				
		OFF	Coin cell	Sleep	Standby	ON
	Coin cell	V_{IN} > UVDET				
	Sleep/ LPSR	Thermal Shutdown	V_{IN} < UVDET	X	X	EN_CFG = 0 EN = 1 & V_{IN} > UVDET or EN_CFG = 1 EN = 0 < 4.0 s & V_{IN} > UNDET
		EN_CFG = 1 EN = 0 ≥ 4.0 s Any SWxOMODE = 1 & ENRSTEN = 1		LPSR (DO1 & DO3 or V33 Enabled) if LDO1OMODE =1 & LDO3OMODE=1 or V33OMODE=1		
	Standby	Thermal Shutdown	V_{IN} < UVDET	EN_CFG = 0 EN = 0 Any SWxOMODE = 1 or EN_CFG = 1 EN = 0 ≥ 4.0 s Any SWxOMODE = 1 & ENRSTEN = 1	X	Standby de-asserted
		EN_CFG = 0 EN = 0 All SWxOMODE = 0 or EN_CFG = 1 EN = 0 ≥ 4.0 s All SWxOMODE = 0 & ENRSTEN = 1				
	ON	Thermal Shutdown	V_{IN} < UVDET	EN_CFG = 0 EN = 0 Any SWxOMODE = 1 or EN_CFG = 1 EN = 0 ≥ 4.0 s Any SWxOMODE = 1 & ENRSTEN = 1	Standby asserted	X
		EN_CFG = 0 EN = 0 All SWxOMODE = 0 or EN_CFG = 1 EN = 0 ≥ 4.0 s All SWxOMODE = 0 & ENRSTEN = 1				

8.5.3 Performance characteristic curves

(V_{IN} = 3.6 V, $SW1_{OUT}$ = 1.0 V; $SW2_{OUT}$ = 1.8 V, $SW3_{OUT}$ = 1.0 V, $SWBST_{OUT}$ = 5.0 V, Switching frequency = 2.0 MHz, Mode = APS; $LDO1_{OUT}$ = 1.8 V, $LDO2_{OUT}$ = 1.0 V, $LDO3_{OUT}$ = 1.8 V, $LDO4_{OUT}$ = 1.8 V, $V33_{OUT}$ = 3.3 V, VSD_{OUT} = 3.3 V, unless otherwise noted)

All information provided in this document is subject to legal disclaimers.

© 2026 NXP B.V. All rights reserved.

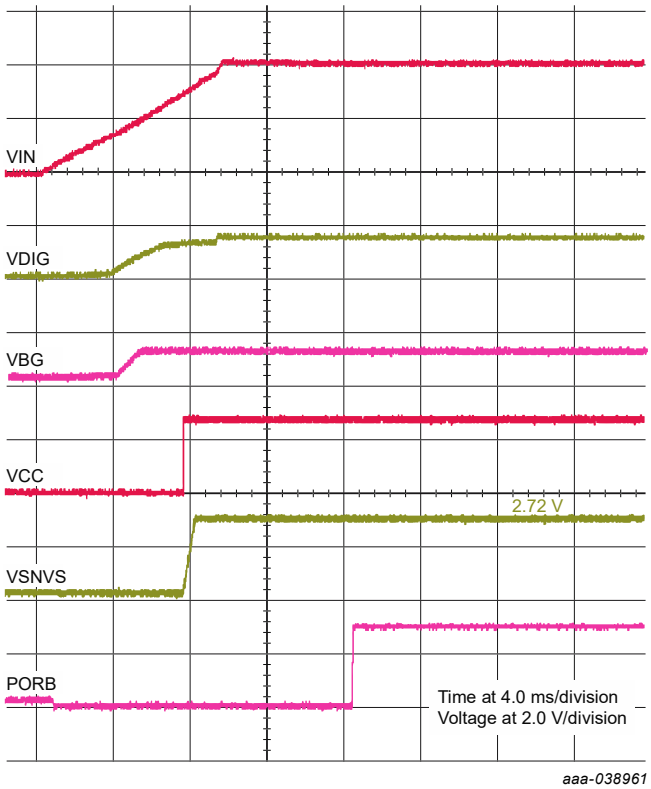

Figure 14. Typical startup waveforms

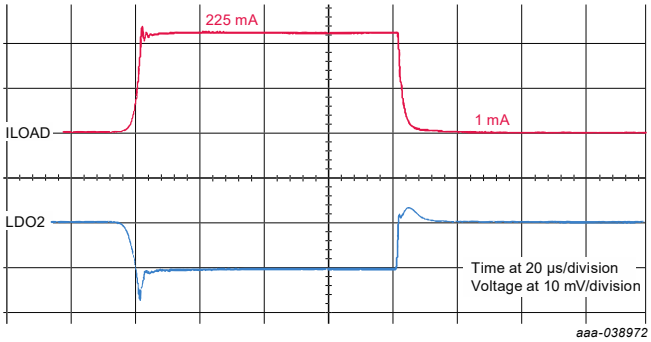

Figure 15. Load transient response – LDO2

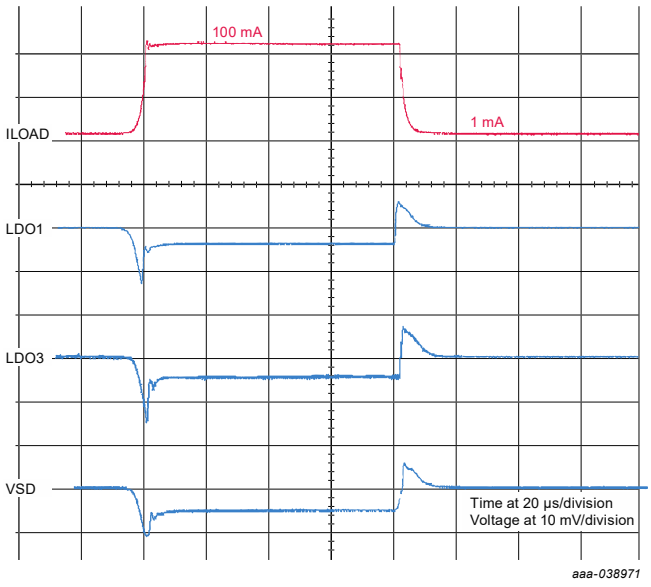

Figure 16. Load transient response – LDO1, LDO3 and VSD

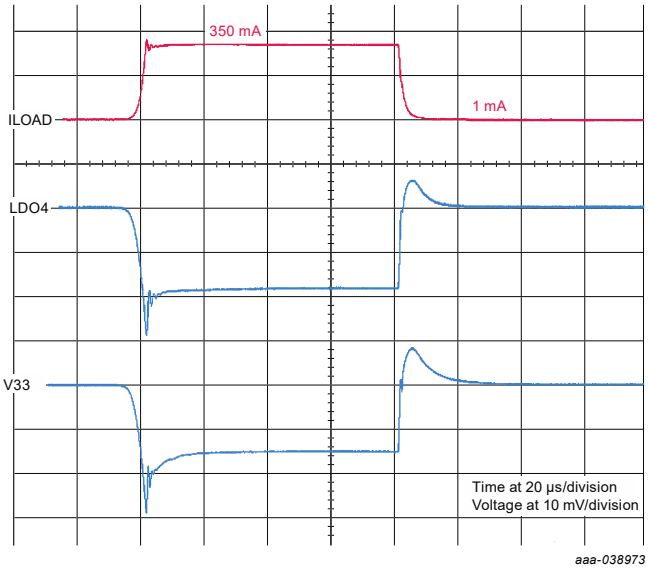

Figure 17. Load transient response – LDO4 and V33

All information provided in this document is subject to legal disclaimers.

© 2026 NXP B.V. All rights reserved.

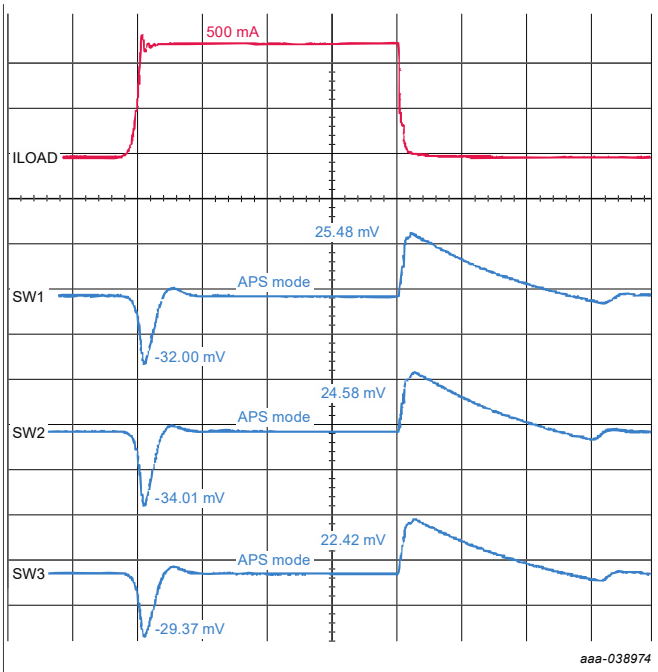

Figure 18. Load transient response – Buck regulators

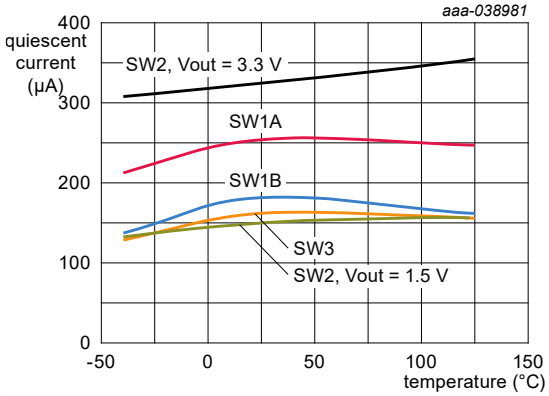

Figure 19. Quiescent current Buck regulators in APS mode

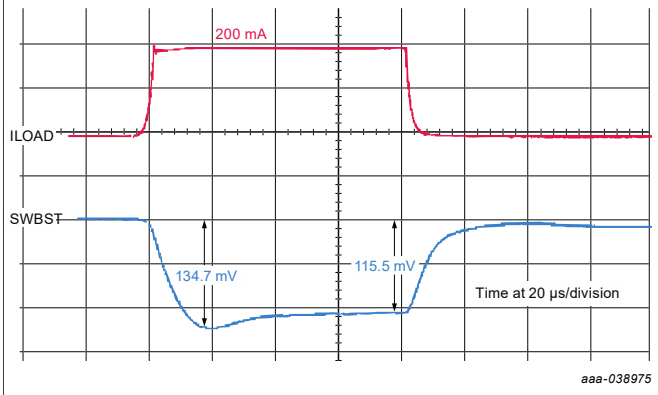

Figure 20. Load transient response – SWBST

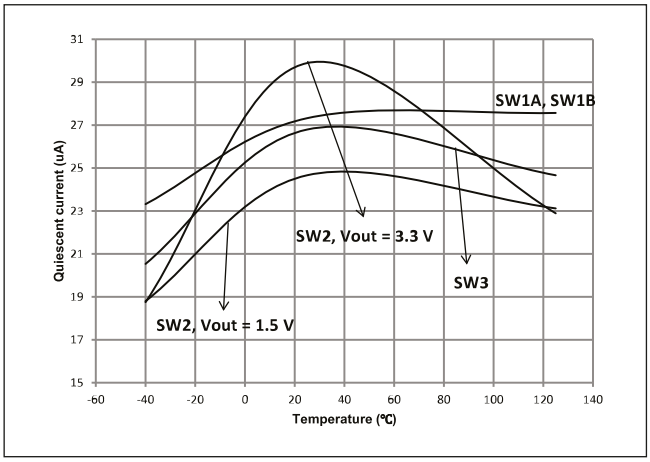

Figure 21. Quiescent current – Buck regulators in PFM mode

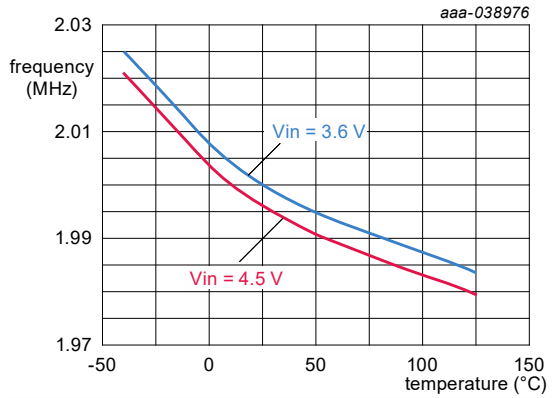

Figure 22. Switching frequency vs temperature

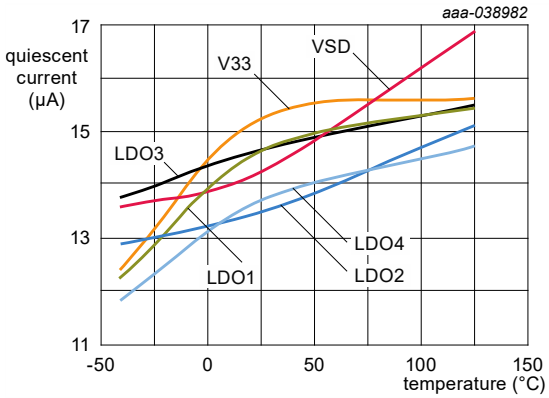

Figure 23. Quiescent current – LDOs

All information provided in this document is subject to legal disclaimers.

© 2026 NXP B.V. All rights reserved.

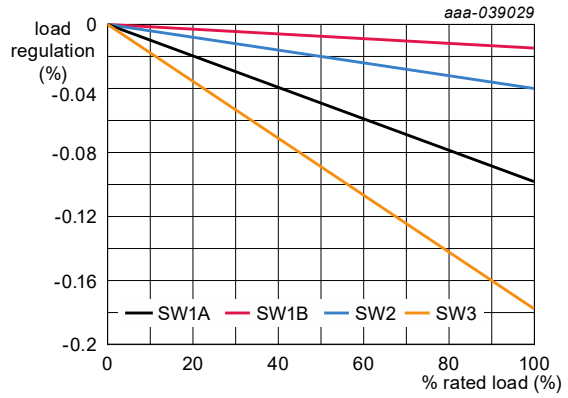

Figure 24. Load regulation – Buck regulators

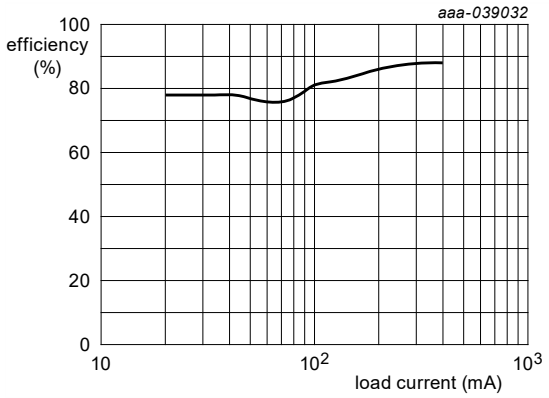

Figure 25. SW1 efficiency – PFM mode, 0.8 V

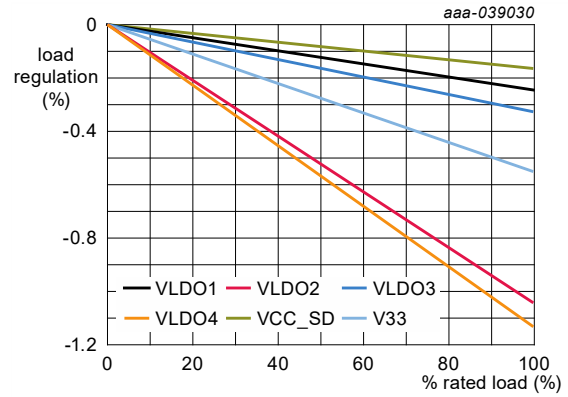

Figure 26. Load regulation – LDOs

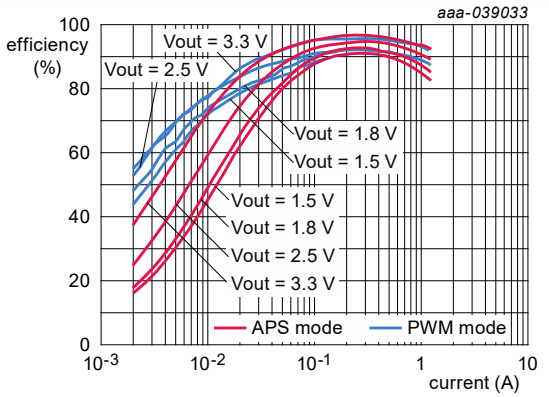

Figure 27. SW2 efficiency – APS and PWM modes

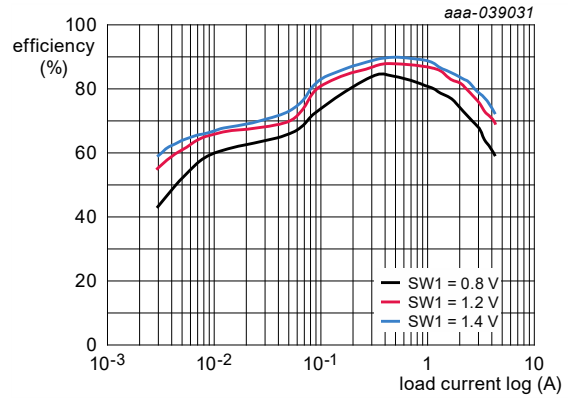

Figure 28. SW1 efficiency – APS mode

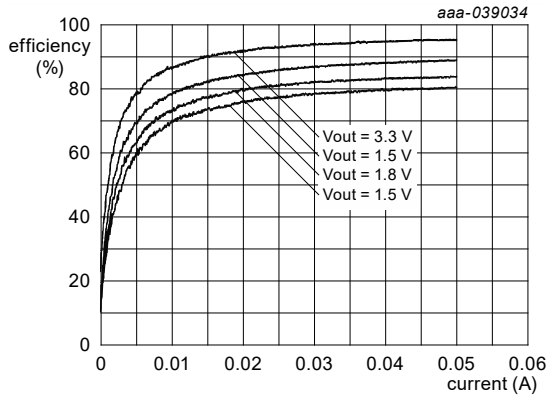

Figure 29. SW2 efficiency – PFM mode

All information provided in this document is subject to legal disclaimers.

© 2026 NXP B.V. All rights reserved.

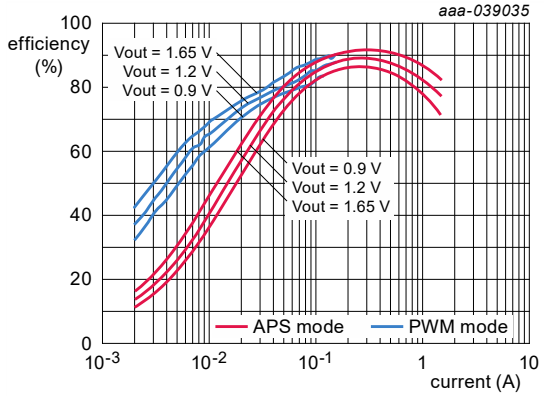

Figure 30. SW3 efficiency – APS and PWM modes

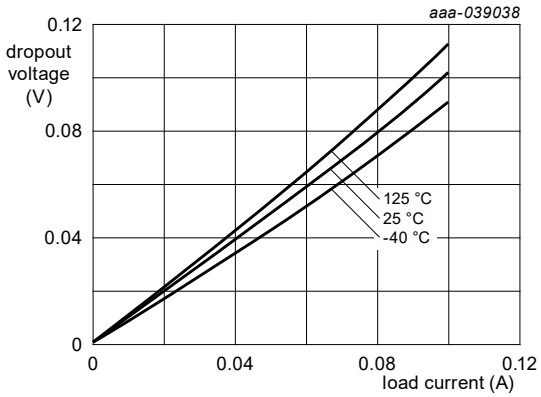

Figure 31. Dropout voltage – LDO1, LDO3: VSD - V_{OUT} = 1.8 V

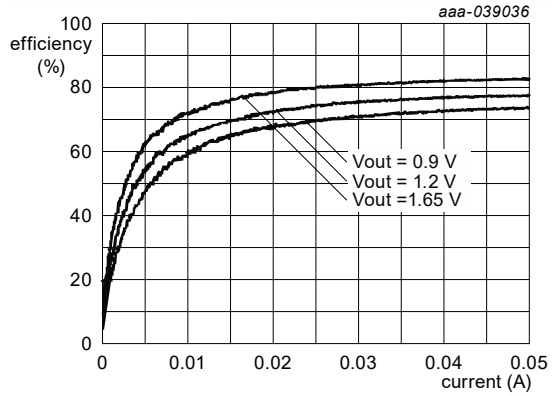

Figure 32. SW3 efficiency – PFM mode

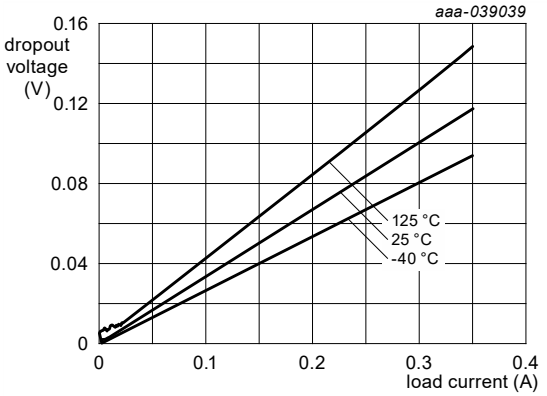

Figure 33. Dropout voltage – LDO4: V33 - V_{OUT} = 3.3 V

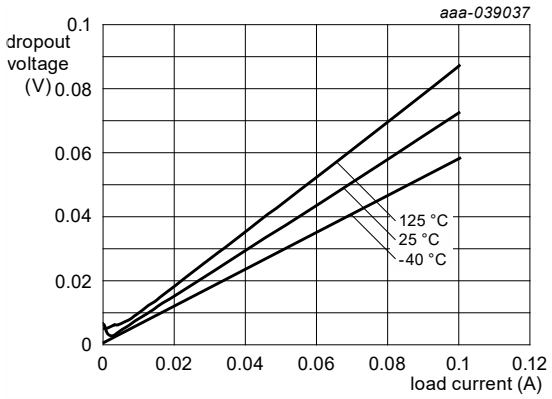

Figure 34. Dropout voltage – LDO1, LDO3: VSD - V_{OUT} = 3.3 V

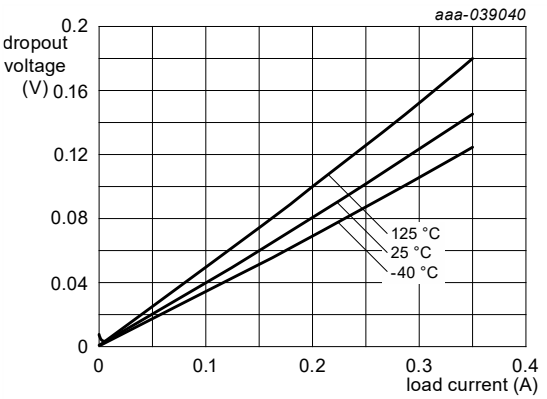

Figure 35. Dropout voltage: LDO4 - V_{OUT} = 1.8 V

8.6 Control interface I^2C block description

The VR5100 contains an I^2C interface port which allows access by a processor, or any I^2C master, to the register set. Via these registers the resources of the IC can be controlled. The registers also provide status information about how the IC is operating.

The SCL and SDA lines should be routed away from noisy signals and planes to minimize noise pick up. To prevent reflections in the SCL and SDA traces from creating false pulses, the rise and fall times of the SCL and

All information provided in this document is subject to legal disclaimers.

© 2026 NXP B.V. All rights reserved.

SDA signals must be greater than 20 ns. This can be accomplished by reducing the drive strength of the I^{2}C master via software. It is recommended to use a drive strength of 80 Ω or higher to increase the edge times. Alternatively, this can be accomplished by using small capacitors from SCL and SDA to ground. For example, use 5.1 pF capacitors from SCL and SDA to ground for bus pull-up resistors of 4.8 kΩ.

8.6.1 I^{2}C device ID

I^{2}C interface protocol requires a device ID for addressing the target IC on a multi-device bus. The I^{2}C address is set to 0x08.

8.6.2 I^{2}C operation

The I^{2}C mode of the interface is implemented generally following the Fast mode definition which supports up to 400 kbits/s operation (exceptions to the standard are noted to be 7-bit only addressing and no support for General Call addressing.)

The I²C interface is configured in Slave mode. Timing diagrams, electrical specifications, and further details can be found in the I^{2}C specification, which is available for download at: http://www.nxp.com/acrobat_download/literature/9398/39340011.pdf

I^{2}C read operations are also performed in byte increments separated by an ACK. Read operations also begin with the MSB and each byte is sent out unless a STOP command or NACK is received prior to completion.

VR5100 only supports single-byte I^{2}C transactions for read and write. The host initiates and terminates all communication. The host sends a master command packet after driving the start condition. The device responds to the host if the master command packet contains the corresponding slave address. In the following examples, the device is shown always responding with an ACK to transmissions from the host. If at any time a NACK is received, the host should terminate the current transaction and retry the transaction.

VR5100 uses the "repeated start" operation for reads as shown in Figure 37.

.

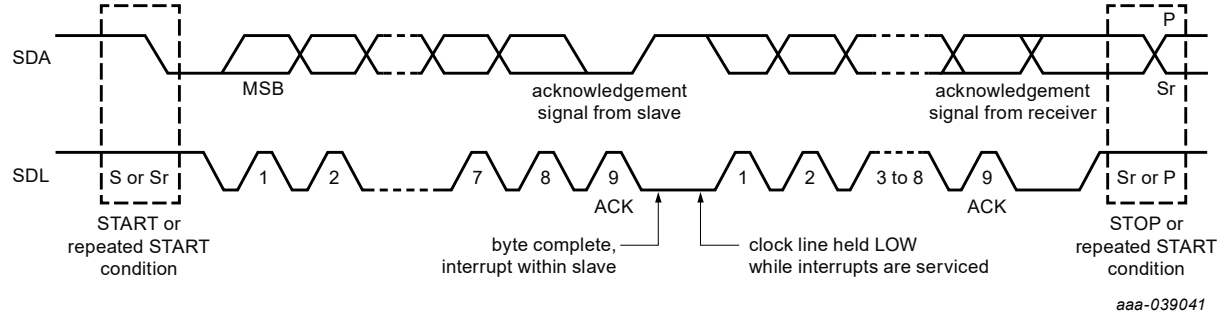

Figure 36. Data transfer on the I^{2}C bus

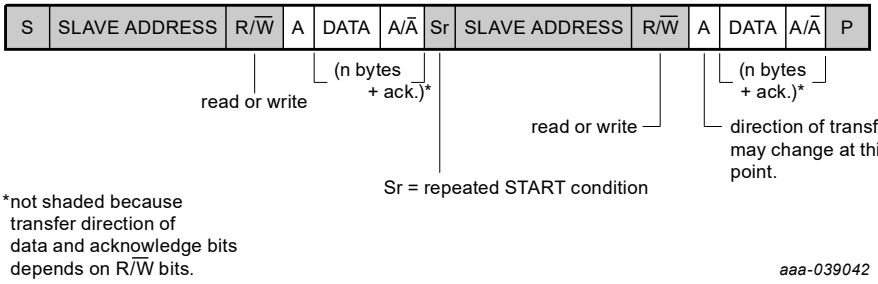

Figure 37. Read operation

All information provided in this document is subject to legal disclaimers.

© 2026 NXP B.V. All rights reserved.

8.6.3 Interrupt handling

The system is informed about important events based on interrupts. Unmasked interrupt events are signaled to the processor by driving the INTB pin low. Each interrupt is latched so even if the interrupt source becomes inactive, the interrupt remains set until cleared. Each interrupt can be cleared by writing a 1" to the appropriate bit in the Interrupt Status register; this causes the INTB pin to go high. If there are multiple interrupt bits set the INTB pin remains low until all are either masked or cleared. If a new interrupt occurs while the processor clears an existing interrupt bit, the INTB pin remains low.

Each interrupt can be masked by setting the corresponding mask bit to a 1. As a result, when a masked interrupt bit goes high, the INTB pin does not go low. A masked interrupt can still be read from the Interrupt Status register. This gives the processor the option of polling for status from the IC. The IC powers up with all interrupts masked, so the processor must initially poll the device to determine if any interrupts are active. Alternatively, the processor can unmask the interrupt bits of interest. If a masked interrupt bit was already high, the INTB pin goes low after unmasking.

The sense registers contain status and input sense bits so the system processor can poll the current state of interrupt sources. They are read only, and not latched or clearable. Interrupts generated by external events are debounced; therefore, the event needs to be stable throughout the debounce period before an interrupt is generated. Nominal debounce periods for each event are documented in the INT summary Table 71. Due to the asynchronous nature of the debounce timer, the effective debounce time can vary slightly.

8.6.4 Interrupt bit summary

Table 71 summarizes all interrupt, mask, and sense bits associated with INTB control. For more detailed behavioral descriptions, refer to the related chapters.

Table 71. Interrupt, mask, and sense bits

Interrupt	Mask	Sense	Purpose	Trig-ger	Debounce time (ms)
LOWVINI	LOWVINM	LOWVINS	Low input voltage detect Sense is 1 if below 2.70 V threshold	H to L	3.9 [1]
ENI	ENM	ENS	Power on button event	H to L	31.25 [1]
			Sense is 1 if EN is high.	L to H	31.25
THERM110	THERM110M	THERM110S	Thermal 110 °C threshold Sense is 1 if above threshold	Dual	3.9
THERM120	THERM120M	THERM120S	Thermal 120 °C threshold Sense is 1 if above threshold	Dual	3.9
THERM125	THERM125M	THERM125S	Thermal 125 °C threshold Sense is 1 if above threshold	Dual	3.9
THERM130	THERM130M	THERM130S	Thermal 130 °C threshold Sense is 1 if above threshold	Dual	3.9
SW1FAULTI	SW1FAULTM	SW1FAULTS	Regulator 1 overcurrent limit Sense is 1 if above current limit	L to H	8.0
SW2FAULTI	SW2FAULTM	SW2FAULTS	Regulator 2 overcurrent limit Sense is 1 if above current limit	L to H	8.0
SW3FAULTI	SW3FAULTM	SW3FAULTS	Regulator 3 overcurrent limit Sense is 1 if above current limit	L to H	8.0

All information provided in this document is subject to legal disclaimers.

© 2026 NXP B.V. All rights reserved.

Table 71. Interrupt, mask, and sense bits *...continued*

Interrupt	Mask	Sense	Purpose	Trig-ger	Debounce time (ms)
SWBSTFAULTI	SWBSTFAULTM	SWBSTFAULTS	SWBST overcurrent limit Sense is 1 if above current limit	L to H	8.0
LDO1FAULTI	LDO1FAULTM	LDO1FAULTS	LDO1 overcurrent limit Sense is 1 if above current limit	L to H	8.0
LDO2FAULTI	LDO2FAULTM	LDO2FAULTS	LDO2 overcurrent limit Sense is 1 if above current limit	L to H	8.0
VSDFAULTI	VSDFAULTM	VSDFAULTS	VSD overcurrent limit Sense is 1 if above current limit	L to H	8.0
V33FAULTI	V33FAULTM	V33FAULTS	V33 overcurrent limit Sense is 1 if above current limit	L to H	8.0
LDO3FAULTI	LDO3FAULTM	LDO1FAULTS	LDO3 overcurrent limit Sense is 1 if above current limit	L to H	8.0
LDO4FAULTI	LDO4FAULTM	LDO4FAULTS	LDO4 overcurrent limit Sense is 1 if above current limit	L to H	8.0
OTP_ECCI	OTP_ECCM	OTP_ECCS	1 or 2 bit error detected in OTP registers Sense is 1 if error detected	L to H	—
OTP_AUTO_BLOW	OTP_AUTO_BLOWM	OTP_AUTO_BLOWS	Interrupt to indicate completion of fuse auto blow	L to H	—

[1] Debounce timing for the falling edge can be extended with ENDBNC[1:0]

A full description of all interrupt, mask, and sense registers is provided in Table 72 to Table 83.

Table 72. Register INTSTAT0 - ADDR 0x05

Name	Bit #	R/W	Default	Description
ENI	0	R/W1C	0	Power on interrupt bit
LOWVINI	1	R/W1C	0	Low-voltage interrupt bit
THERM110I	2	R/W1C	0	110 °C thermal interrupt bit
THERM120I	3	R/W1C	0	120 °C thermal interrupt bit
THERM125I	4	R/W1C	0	125 °C thermal interrupt bit
THERM130I	5	R/W1C	0	130 °C thermal interrupt bit
Unused	7:6	—	0b00	Unused

Table 73. Register INTMASK0 - ADDR 0x06

Name	Bit #	R/W	Default	Description
ENM	0	R/W1C	1	Power on interrupt mask bit
LOWVINM	1	R/W1C	1	Low-voltage interrupt mask bit
THERM110M	2	R/W1C	1	110 °C thermal interrupt mask bit
THERM120M	3	R/W1C	1	120 °C thermal interrupt mask bit

All information provided in this document is subject to legal disclaimers.

© 2026 NXP B.V. All rights reserved.

Table 73. Register INTMASK0 - ADDR 0x06*...continued*

Name	Bit #	R/W	Default	Description
THERM125M	4	R/W1C	1	125 °C thermal interrupt mask bit
THERM130M	5	R/W1C	1	130 °C thermal interrupt mask bit
Unused	7:6	—	0b00	Unused

Table 74. Register INTSENSE0 - ADDR 0x07

Name	Bit #	R/W	Default	Description
ENS	0	R	0	Power on sense bit 0 = EN low 1 = EN high
LOWVINS	1	R	0	Low voltage sense bit 0 = VIN > 2.7 V 1 = VIN ≤ 2.7 V
THERM110S	2	R	0	110 °C Thermal sense bit 0 = Below threshold 1 = Above threshold
THERM120S	3	R	0	120 °C Thermal sense bit 0 = Below threshold 1 = Above threshold
THERM125S	4	R	0	125 °C thermal sense bit 0 = Below threshold 1 = Above threshold
THERM130S	5	R	0	130 °C thermal sense bit 0 = Below threshold 1 = Above threshold
ICTESTS	6	R	0	0 = ICTEST pin is grounded 1 = ICTEST to VDIG or greater
VDDOTPS	7	R	0	Additional VDDOTP voltage sense pin 0 = VDDOTP grounded 1 = VDDOTP to VDIG or greater

Table 75. Register INTSTAT1 - ADDR 0x08

Name	Bit #	R/W	Default	Description
SW1FAULTI	0	R/W1C	0	SW1 overcurrent interrupt bit
SW1FAULTI	1	R/W1C	0	SW1 overcurrent interrupt bit
Unused	2	R/W1C	0	Unused
SW2FAULTI	3	R/W1C	0	SW2 overcurrent interrupt bit
SW3FAULTI	4	R/W1C	0	SW3 overcurrent interrupt bit
Unused	5	R/W1C	0	Unused
Unused	6	R/W1C	0	Unused

All information provided in this document is subject to legal disclaimers.

© 2026 NXP B.V. All rights reserved.

Table 75. Register INTSTAT1 - ADDR 0x08*...continued*

Name	Bit #	R/W	Default	Description
Unused	7	—	0	Unused

Table 76. Register INTMASK1 - ADDR 0x09

Name	Bit #	R/W	Default	Description
SW1FAULTM	0	R/W	1	SW1 overcurrent interrupt mask bit
SW1FAULTM	1	R/W	1	SW1 overcurrent interrupt mask bit
Unused	2	R/W	1	Unused
SW2FAULTM	3	R/W	1	SW2 overcurrent interrupt mask bit
SW3FAULTM	4	R/W	1	SW3 overcurrent interrupt mask bit
Unused	5	R/W	1	Unused
Unused	6	R/W	1	Unused
Unused	7	—	0	Unused

Table 77. Register INTSENSE1 - ADDR 0x0A

Name	Bit #	R/W	Default	Description
SW1FAULTS	0	R	0	SW1 overcurrent sense bit 0 = Normal operation 1 = Above current limit
Unused	1	R	0	Unused
SW1FAULTS	2	R	0	SW1 overcurrent sense bit 0 = Normal operation 1 = Above current limit
SW2FAULTS	3	R	0	SW2 overcurrent sense bit 0 = Normal operation 1 = Above current limit
SW3FAULTS	4	R	0	SW3 overcurrent sense bit 0 = Normal operation 1 = Above current limit
Unused	5	R	0	Unused
Unused	6	R	0	Unused
Unused	7	—	0	Unused

Table 78. Register INTSTAT3 - ADDR 0x0E

Name	Bit #	R/W	Default	Description
SWBSTFAULTI	0	R/W1C	0	SWBST overcurrent limit interrupt bit
Unused	1	—	0b0	Unused
Unused	2	—	0b0	Unused

All information provided in this document is subject to legal disclaimers.

© 2026 NXP B.V. All rights reserved.

Table 78. Register INTSTAT3 - ADDR 0x0E*...continued*

Name	Bit #	R/W	Default	Description
Unused	5:3	—	0b0	Unused
OTP AUTO BLOW	6	R/W1C	0b0	High after Auto Fuse Blow Sequence is completed
OTP_ECCI	7	R/W1C	0	OTP error interrupt bit

Table 79. Register INTMASK3 - ADDR 0x0F

Name	Bit #	R/W	Default	Description
SWBSTFAULTM	0	R/W	1	SWBST overcurrent limit interrupt mask bit
Unused	1	—	0	Unused
Unused	2	—	1	Unused
Unused	5:3	—	0b000	Unused
OTP_AUTO_BLOW_ DONE_M	6	R/W	1	OTP auto blow mask bit
OTP_ECCM	7	R/W	1	OTP error interrupt mask bit

Table 80. Register INTSENSE3 - ADDR 0x10

Name	Bit #	R/W	Default	Description
SWBSTFAULTS	0	R	0	SWBST overcurrent limit sense bit 0 = Normal operation 1 = Above current limit
Unused	1	—	0b0	Unused
Unused	2	—	0	Unused
Unused	5:3	—	0b000	Unused
OTP_AUTO_BLOW_ DONE_S	6	R	0	OTP auto blow sense bit. This bit is high while the auto blow sequence is running. Do not read/write the OTP TBB registers while this bit is 1.
OTP_ECCS	7	R	0	OTP error sense bit 0 = No error detected 1 = OTP error detected

Table 81. Register INTSTAT4 - ADDR 0x11

Name	Bit #	R/W	Default	Description
LDO1FAULTI	0	R/W1C	0	LDO1 overcurrent interrupt bit
LDO2FAULTI	1	R/W1C	0	LDO2 overcurrent interrupt bit
VSDFAULTI	2	R/W1C	0	VSD overcurrent interrupt bit
V33FAULTI	3	R/W1C	0	V33 overcurrent interrupt bit
LDO3FAULTI	4	R/W1C	0	LDO3 overcurrent interrupt bit
LDO4FAULTI	5	R/W1C	0	LDO4 overcurrent interrupt bit

All information provided in this document is subject to legal disclaimers.

© 2026 NXP B.V. All rights reserved.

Table 81. Register INTSTAT4 - ADDR 0x11*...continued*

Name	Bit #	R/W	Default	Description
Unused	7:6	–	0b00	Unused

Table 82. Register INTMASK4 - ADDR 0x12

Name	Bit #	R/W	Default	Description
LDO1FAULTM	0	R/W	1	LDO1 overcurrent interrupt mask bit
LDO2FAULTM	1	R/W	1	LDO2 overcurrent interrupt mask bit
VSDFAULTM	2	R/W	1	VSD overcurrent interrupt mask bit
V33FAULTM	3	R/W	1	V33 overcurrent interrupt mask bit
LDO3FAULTM	4	R/W	1	LDO3 overcurrent interrupt mask bit
LDO4FAULTM	5	R/W	1	LDO4 overcurrent interrupt mask bit
Unused	7:6	—	0b00	Unused

Table 83. Register INTSENSE4 - ADDR 0x13

Name	Bit #	R/W	Default	Description
LDO1FAULTS	0	R	0	LDO1 overcurrent sense bit 0 = Normal operation 1 = Above current limit
LDO2FAULTS	1	R	0	LDO2 overcurrent sense bit 0 = Normal operation 1 = Above current limit
VSDFAULTS	2	R	0	VSD overcurrent sense bit 0 = Normal operation 1 = Above current limit
V33FAULTS	3	R	0	V33 overcurrent sense bit 0 = Normal operation 1 = Above current limit
LDO3FAULTS	4	R	0	LDO3 overcurrent sense bit 0 = Normal operation 1 = Above current limit
LDO4FAULTS	5	R	0	LDO4 overcurrent sense bit 0 = Normal operation 1 = Above current limit
Unused	7:6	—	0b00	Unused

8.6.5 Specific registers

8.6.5.1 IC and version identification

The IC and other version details can be read via identification bits. These are hard-wired on the chip and described in Table 84 to Table 86.

All information provided in this document is subject to legal disclaimers.

© 2026 NXP B.V. All rights reserved.

Table 84. Register DEVICEID - ADDR 0x00

Name	Bit #	R/W	Default	Description
DEVICEID	3:0	R	0x0	0000 = VR5100
FAMILY	7:4	R	0x3	0011 = VR5100

Table 85. Register SILICON REV- ADDR 0x03

Name	Bit #	R/W	Default	Description
METAL_LAYER_REV	3:0	R	0x0	Represents the metal mask revision Pass 0.0 = 0000 … Pass 0.15 = 1111
FULL_LAYER_REV	7:4	R	0x1	Represents the full mask revision Pass 1.0 = 0001 … Pass 15.0 = 1111

Table 86. Register FABID - ADDR 0x04

Name	Bit #	R/W	Default	Description
FIN	1:0	R	0b00	Allows for characterizing different options within the same reticule
FAB	3:2	R	0b00	Represents the wafer manufacturing facility
Unused	7:4	R	0b0000	Unused

8.6.5.2 Embedded Memory

There are four register banks of general purpose embedded memory to store critical data. The data written to MEMA[7:0], MEMB[7:0], MEMC[7:0], and MEMD[7:0] is maintained by the coin cell when the main battery is deeply discharged, removed, or contact-bounced. The contents of the embedded memory are reset by COINPORB. The banks can be used for any system need for bit retention with coin cell backup.

Table 87. Register MEMA ADDR 0x1C

Name	Bit #	R/W	Default	Description
MEMA	7:0	R/W	0x00	Memory bank A

Table 88. Register MEMB ADDR 0x1D

Name	Bit #	R/W	Default	Description
MEMB	7:0	R/W	0x00	Memory bank B

Table 89. Register MEMC ADDR 0x1E

Name	Bit #	R/W	Default	Description
MEMC	7:0	R/W	0x00	Memory bank C

All information provided in this document is subject to legal disclaimers.

© 2026 NXP B.V. All rights reserved.

Table 90. Register MEMD ADDR 0x1F

Name	Bit #	R/W	Default	Description
MEMD	7:0	R/W	0x00	Memory bank D

8.6.5.3 Register descriptions

This section describes all the VR5100 registers and their individual bits. Address order is as listed in Register map Section 8.6.6.1.

8.6.5.3.1 Interrupt status register 0 (INTSTAT0)

INSTAT0 is one of the four status interrupt registers. This register contains six status flags. Write a logic 1 to clear a flag.

Table 91. Status interrupt register 0 (INTSTAT0)

	Address: 0x05 functional page					Access: user read/write [1]		
	7	**6**	**5**	**4**	**3**	**2**	**1**	**0**
R	—	—	THERM130I	THERM125I	THERM120I	THERM110I	LOWVINI	ENNI
W								
Default	0	0	0	0	0	0	0	0
"—" = Unimplemented or reserved								

[1] Read: Anytime
Write: Anytime

Table 92. INTSTAT0 Field descriptions

Field	Description
5 THERM130I	**130 °C Thermal interrupt bit** — THERM130I is set to 1 when the THERM130 threshold specified in is crossed in either direction (bi-directional). This flag can only be cleared by writing a 1. Writing a 0 has no effect. 0 Die temperature has not crossed THERM130 threshold. 1 Die temperature has crossed THERM130 threshold.
4 THERM125I	**125 °C Thermal interrupt bit** — THERM125I is set to 1 when the THERM125 threshold specified in is crossed in either direction (bi-directional). This flag can only be cleared by writing a 1. Writing a 0 has no effect. 0 Die temperature has not crossed THERM125 threshold. 1 Die temperature has crossed THERM125 threshold.
3 THERM120I	**120 °C Thermal interrupt bit** — THERM120I is set to 1 when the THERM120 threshold specified in is crossed in either direction (bi-directional). This flag can only be cleared by writing a 1. Writing a 0 has no effect. 0 Die temperature has not crossed THERM120 threshold. 1 Die temperature has crossed THERM120 threshold.
2 THERM110I	**110 °C Thermal interrupt bit** — THERM110I is set to 1 when the THERM110 threshold specified in is crossed in either direction (bi-directional). This flag can only be cleared by writing a 1. Writing a 0 has no effect. 0 Die temperature has not crossed THERM110 threshold. 1 Die temperature has crossed THERM110 threshold.

All information provided in this document is subject to legal disclaimers.

© 2026 NXP B.V. All rights reserved.

Table 92. INTSTAT0 Field descriptions*...continued*

Field	Description
1 LOWVINI	**Low-voltage interrupt bit** — LOWVINI is set to 1 when a low-voltage event occurs on VIN. This flag can only be cleared by writing a 1. Writing a 0 has no effect. 0 V_{IN} > 2.7 V (typical) 1 V_{IN} < 2.7 V (typical)
0 ENI	**Power on interrupt bit** —ENI is set to 1 when the turn on event occurs. This flag can only be cleared by writing a 1. Writing a 0 has no effect. 0 Power on has not occurred. 1 Power on has occurred.

8.6.5.3.2 Interrupt status mask register 0 (INTMASK0)

INTMASK0 is the mask register for the status interrupt register INTSTAT0. Write a logic 0 to a bit to unmask the corresponding interrupt. When unmasked, the corresponding interrupt state is reflected on the INTB pin.

Table 93. Interrupt status mask register 0 (INTMASK0)

Address: 0x06 functional page						Access: user read/write [1]		
	7	6	5	4	3	2	1	0
R W	—	—	THERM130M	THERM125M	THERM120M	THERM110M	LOWVINM	ENM
Default	0	0	1	1	1	1	1	1
"—" = Unimplemented or reserved								

[1] Read: Anytime
Write: Anytime

Table 94. INTMASK0 field descriptions

Field	Description
5 THERM130M	130 °C thermal interrupt mask bit 0 THERM130I unmasked 1 THERM130I masked
4 THERM125M	125 °C thermal interrupt mask bit 0 THERM125I unmasked 1 THERM125I masked
3 THERM120M	120 °C thermal interrupt mask bit 0 THERM120I unmasked 1 THERM120I masked
2 THERM110M	110 °C thermal interrupt mask bit 0 THERM110I unmasked 1 THERM110I masked
1 LOWVINM	Low-voltage interrupt mask bit 0 LOWVINI unmasked 1 LOWVINI masked
0 ENM	Power on interrupt mask bit 0 ENI unmasked

All information provided in this document is subject to legal disclaimers.

© 2026 NXP B.V. All rights reserved.

Table 94. INTMASK0 field descriptions...*continued*

Field	Description
	1 ENI masked

8.6.5.3.3 Interrupt sense register 0 (INTSENSE0)

This register has seven read-only sense bits. These sense bits reflects the actual state of the corresponding function.

Table 95. Interrupt sense register 0 (INTSENSE0)

Address: 0x07 functional page						Access: user read-only [1]		
	7	6	5	4	3	2	1	0
R	VDDOTPS	—	THERM130S	THERM125S	THERM120S	THERM110S	LOWVINS	ENS
W								
Default	X [2]	0	X [3]	X [3]	X [3]	X [3]	X [4]	X [5]
"—" = Unimplemented or reserved								

[1] Read: Anytime
[2] Default value depends on the initial VDDOTP pin state.
[3] Default value depends on the initial temperature of the die
[4] Default value depends on the initial VIN voltage
[5] Default value depends on the initial EN pin state

Table 96. INTSENSE0 field descriptions

Field	Description
7 VDDOTPS	**VDDOTP voltage sense bit** 0 VDDOTP grounded. 1 VDDOTP to VDIG or greater.
5 THERM130S	**130 °C thermal interrupt sense bit** 0 Die temperature below THERM130 threshold. 1 Die temperature above THERM130 threshold.
4 THERM125S	125 °C thermal interrupt sense bit 0 Die temperature below THERM125 threshold. 1 Die temperature has crossed THERM125 threshold.
3 THERM120S	120 °C thermal interrupt sense bit 0 Die temperature below THERM120 threshold. 1 Die temperature has crossed THERM120 threshold.
2 THERM110S	110 °C thermal interrupt sense bit 0 Die temperature below THERM110 threshold. 1 Die temperature has crossed THERM110 threshold.
1 LOWVINS	Low-voltage interrupt sense bit 0 V_{IN} > 2.7 V (typical) 1 V_{IN} < 2.7 V (typical)
0 ENS	Power on interrupt sense bit 0 EN low. 1 EN high.

All information provided in this document is subject to legal disclaimers.

© 2026 NXP B.V. All rights reserved.

8.6.5.3.4 Interrupt status register 1 (INTSTAT1)

INSTAT1 is one of the four status interrupt registers. This register contains four status flags. Write a logic 1 to clear a flag.

Table 97. Status interrupt register 1 (INTSTAT1)

Address: 0x08 functional page						Access: user read/write [1]		
	7	6	5	4	3	2	1	0
R W	—	—	—	SW3FAULTI	SW2FAULTI	—	SW1FAULTI	SW1FAULTI
Default	0	0	0	0	0	0	0	0
"—" = Unimplemented or reserved								

[1] Read: Anytime
Write: Anytime

Table 98. INTSTAT1 field descriptions

Field	Description
4 SW3 FAULTI	**SW3 overcurrent interrupt bit** — SW3FAULTI is set to 1 when the SW3 regulator is in current limit protection. This flag can only be cleared by writing a 1. Writing a 0 has no effect. 0 SW3 in normal operation 1 SW3 above current limit
3 SW2 FAULTI	**SW2 overcurrent interrupt bit** — SW2FAULTI is set to 1 when the SW2 regulator is in current limit protection. This flag can only be cleared by writing a 1. Writing a 0 has no effect. 0 SW2 in normal operation 1 SW2 above current limit
1 SW1 FAULTI	**SW1 overcurrent interrupt bit** — SW1FAULTI is set to 1 when the SW1 regulator is in current limit protection. This flag can only be cleared by writing a 1. Writing a 0 has no effect. 0 SW1 in normal operation 1 SW1 above current limit
0 SW1 FAULTI	**SW1 overcurrent interrupt bit** — SW1FAULTI is set to 1 when the SW1 regulator is in current limit protection. This flag can only be cleared by writing a 1. Writing a 0 has no effect. 0 SW1 in normal operation 1 SW1 above current limit

8.6.5.3.5 Interrupt status mask register 1 (INTMASK1)

INTMASK1 is the mask register for the status interrupt register INTSTAT1. Write a logic 0 to a bit to unmask the corresponding interrupt. When unmasked, the corresponding interrupt state is reflected on the INTB pin.

Table 99. Interrupt status mask register 1 (INTMASK1)

Address: 0x09 functional page						Access: user read/write [1]		
	7	6	5	4	3	2	1	**0**
R W				SW3 FAULTM	SW2 FAULTM		SW1 FAULTM	SW1 FAULTM
Default	0	0	0	1	1	0	1	1

All information provided in this document is subject to legal disclaimers.

© 2026 NXP B.V. All rights reserved.

Table 99. Interrupt status mask register 1 (INTMASK1)*...continued*

"—" = Unimplemented or reserved

[1] Read: Anytime
Write: Anytime

Table 100. INTMASK1 field descriptions

Field	Description
4 SW3 FAULTM	SW3 overcurrent interrupt mask bit 0 SW3FAULTI Unmasked 1 SW3FAULTI Masked
3 SW2 FAULTM	SW2 overcurrent interrupt mask bit 0 SW2FAULTI Unmasked 1 SW2FAULTI Masked
1 SW1 FAULTM	SW1 overcurrent interrupt mask bit 0 SW1FAULTI Unmasked 1 SW1FAULTI Masked
0 SW1 FAULTM	SW1 overcurrent interrupt mask bit 0 SW1FAULTI Unmasked 1 SW1FAULTI Masked

8.6.5.3.6 Interrupt sense register 1 (INTSENSE1)

This register has four read-only sense bits. These sense bits reflect the actual state of the corresponding function.

Table 101. Interrupt sense register 1 (INTSENSE1)

Address: 0x0A functional page						Access: user read-only [1]		
	7	6	5	4	3	2	1	0
R	—	—	—	SW3 FAULTS	SW2 FAULTS	—	SW1 FAULTS	SW1 FAULTS
W								
Default	0	0	0	X [2]	X [2]	0	X [2]	X [2]
"—" = Unimplemented or reserved								

[1] Read: Anytime
[2] Default value depends on the regulator initial state

Table 102. INTSENSE1 field descriptions

Field	Description
4 SW3FAULTS	SW3 overcurrent sense bit 0 SW3 in normal operation 1 SW3 above current limit
3 SW2FAULTS	SW2 overcurrent sense bit 0 SW2 in normal operation 1 SW2 above current limit

All information provided in this document is subject to legal disclaimers.

© 2026 NXP B.V. All rights reserved.

Table 102. INTSENSE1 field descriptions...*continued*

Field	Description
1 SW1FAULTS	SW1 overcurrent sense bit 0 SW1 in normal operation 1 SW1 above current limit
0 SW1FAULTS	SW1 overcurrent sense bit 0 SW1 in normal operation 1 SW1 above current limit

8.6.5.3.7 Interrupt status register 3 (INTSTAT3)

INSTAT3 is one of the four status interrupt registers. This register contains four status flags. Write a logic 1 to clear a flag.

Table 103. Status interrupt register 3 (INTSTAT3)

Address: 0x0E functional page						Access: user read/write [1]		
	7	**6**	**5**	**4**	**3**	**2**	**1**	**0**
R W	OTP_ECCI	OTP_ AUTO_ BLOW_ DONEI	—	—	—	—	—	SWBSTF AULTI
Default	0	0	0	0	0	0	0	0
"—" = Unimplemented or reserved								

[1] Read: Anytime
Write: Anytime

Table 104. INTSTAT3 field descriptions

Field	Description
7 OTP_ECCI	**OTP error interrupt bit** — OTP_ECCI is set to 1 when an error is detected in OTP registers. This flag can only be cleared by writing a 1. Writing a 0 has no effect. 0 No error detected 1 OTP error detected
6 OTP_AUTO_ BLOW_ DONEI	**OTP auto fuse blow interrupt bit** — OTP_AUTO_BLOW_DONEI is set to 1 after the Auto Fuse Blow Sequence is completed. This flag can only be cleared by writing a 1. Writing a 0 has no effect. 0 OTP Auto Fuse Blow Sequence not completed 1 OTP Auto Fuse Blow Sequence completed
0 SWBSTF AULTI	**SWBST overcurrent limit interrupt bit** — SWBSTFAULTI is set to 1 when the SWBST regulator is in current limit protection. This flag can only be cleared by writing a 1. Writing a 0 has no effect. 0 SWBST in normal operation 1 SWBST above current limit

8.6.5.3.8 Interrupt status mask register 3 (INTMASK3)

INTMASK3 is the mask register for the status interrupt register INTSTAT3. Write a logic 0 to a bit to unmask the corresponding interrupt. When unmasked, the corresponding interrupt state is reflected on the INTB pin.

All information provided in this document is subject to legal disclaimers.

© 2026 NXP B.V. All rights reserved.

Table 105. Interrupt status mask register 3 (INTMASK3)

Address: 0x0F functional page						Access: user read/write [1]		
	7	6	5	4	3	2	1	0
R	OTP_ECCM	OTP_AUTO_BLOW_DONEM	—	—	—	—	—	SWBSTFAULTM
W								
Default	1	1	0	0	0	1	0	1
"—" = Unimplemented or reserved								

[1] Read: Anytime
Write: Anytime

Table 106. INTMASK3 field descriptions

Field	Description
7 OTP_ECCM	OTP error interrupt mask bit 0 OTP_ECCI unmasked 1 OTP_ECCI masked
6 OTP_AUTO_BLOW_DONEM	OTP auto blow mask bit 0 OTP_AUTO_BLOW_DONEI unmasked 1 OTP_AUTO_BLOW_DONEI masked
0 SWBSTFAULTM	SWBST overcurrent limit interrupt mask bit 0 SWBSTFAULTI unmasked 1 SWBSTFAULTI masked

8.6.5.3.9 Interrupt sense register 3 (INTSENSE3)

This register has four read-only sense bits. These sense bits reflect the actual state of the corresponding function.

Table 107. Interrupt sense register 3 (INTSENSE3)

Address: 0x10 functional page						Access: user read-only [1]		
	7	**6**	**5**	**4**	**3**	**2**	**1**	**0**
R	OTP_ECCS	OTP_AUTO_BLOW_DONES	—	—	—	—	—	SWBSTFAULTS
W								
Default	0	0	0	0	0	0	0	X [2]
"—" = Unimplemented or reserved								

[1] Read: Anytime
[2] Default value depends on the regulator initial state

All information provided in this document is subject to legal disclaimers.

© 2026 NXP B.V. All rights reserved.

Table 108. INTSENSE3 field descriptions

Field	Description
7 OTP_ECCS	OTP error sense bit 0 No error detected 1 OTP error detected
6 OTP_AUTO_BLOW_DONES	**OTP auto blow sense bit** — This bit is high while the auto blow sequence is running. Do not read/write the OTP TBB registers while this bit is 1. 0 SW2 in normal operation 1 SW2 at current limit
0 SWBSTFAULTS	SWBST overcurrent limit sense bit 0 SWBST in normal operation 1 SWBST above current limit

8.6.5.3.10 Interrupt status register 4 (INTSTAT4)

INSTAT4 is one of the four status interrupt registers. This register contains six status flags. Write a logic 1 to clear a flag.

Table 109. Status interrupt register 4 (INTSTAT4)

Address: 0x11 functional page						Access: user read/write [1]		
	7	6	5	4	3	2	1	0
R W	—	—	LDO4FAULTI	LDO3FAULTI	V33FAULTI	VSDFAULTI	LDO2FAULTI	LDO1FAULTI
Default	0	0	0	0	0	0	0	0
"—" = Unimplemented or reserved								

[1] Read: Anytime
Write: Anytime

Table 110. INTSTAT4 field descriptions

Field	Description
5 LDO4FAULTI	**LDO4 overcurrent interrupt bit** — LDO4FAULTI is set to 1 when the LDO4 regulator is in current limit protection. This flag can only be cleared by writing a 1. Writing a 0 has no effect. 0 LDO4 in normal operation 1 LDO4 above current limit
4 LDO3FAULTI	**LDO3 overcurrent interrupt bit** — LDO3FAULTI is set to 1 when the LDO3 regulator is in current limit protection. This flag can only be cleared by writing a 1. Writing a 0 has no effect. 0 LDO3 in normal operation 1 LDO3 above current limit
3 V33FAULTI	**V33 overcurrent interrupt bit** — V33FAULTI is set to 1 when the V33 regulator is in current limit protection. This flag can only be cleared by writing a 1. Writing a 0 has no effect. 0 V33 in normal operation 1 V33 above current limit
2 VSDFAULTI	**VSD overcurrent interrupt bit** — VSDFAULTI is set to 1 when the VSD regulator is in current limit protection. This flag can only be cleared by writing a 1. Writing a 0 has no effect. 0 VSD in normal operation 1 VSD above current limit

All information provided in this document is subject to legal disclaimers.

© 2026 NXP B.V. All rights reserved.

Table 110. INTSTAT4 field descriptions...*continued*

Field	Description
1 LDO2FAULTI	**LDO2 overcurrent interrupt bit** — LDO2FAULTI is set to 1 when the LDO2 regulator is in current limit protection. This flag can only be cleared by writing a 1. Writing a 0 has no effect. 0 LDO2 in normal operation range. 1 LDO2 above current limit
0 LDO1FAULTI	**LDO1 overcurrent interrupt bit** — LDO1FAULTI is set to 1 when the LDO1 regulator is in current limit protection. This flag can only be cleared by writing a 1. Writing a 0 has no effect. 0 LDO1 in normal operation range. 1 LDO1 above current limit

8.6.5.3.11 Interrupt status mask register 4 (INTMASK4)

INTMASK4 is the mask register for the status interrupt register INTSTAT4. Write a logic 0 to a bit to unmask the corresponding interrupt. When unmasked, the corresponding interrupt state is reflected on the INTB pin.

Table 111. Interrupt status mask register 4 (INTMASK4)

Address: 0x12 functional page						Access: user read/write [1]		
	7	6	5	4	3	2	1	0
R W	—	—	LDO4 FAULTM	LDO3 FAULTM	V33 FAULTM	VSD FAULTM	LDO2 FAULTM	LDO1 FAULTM
Default	0	0	1	1	1	1	1	1
"—" = Unimplemented or reserved								

[1] Read: Anytime
Write: Anytime

Table 112. INTMASK4 field descriptions

Field	Description
5 LDO4FAULTM	LDO4 overcurrent interrupt mask bit 0 LDO4FAULTI unmasked 1 LDO4FAULTI masked
4 LDO3FAULTM	LDO3 overcurrent interrupt mask bit 0 LDO3FAULTI unmasked 1 LDO3FAULTI masked
3 V33FAULTM	V33 overcurrent interrupt mask bit 0 V33FAULTI unmasked 1 V33FAULTI masked
2 VSDFAULTM	VSD overcurrent interrupt mask bit 0 VSDFAULTI unmasked 1 VSDFAULTI masked
1 LDO2FAULTM	LDO2 overcurrent interrupt mask bit 0 LDO2FAULTI unmasked 1 LDO2FAULTI masked
0 LDO1FAULTM	LDO1 overcurrent interrupt mask bit 0 LDO1FAULTI unmasked

All information provided in this document is subject to legal disclaimers.

© 2026 NXP B.V. All rights reserved.

Table 112. INTMASK4 field descriptions...*continued*

Field	Description
	1 LDO1FAULTI masked

8.6.5.3.12 Interrupt sense register 4 (INTSENSE4)

This register has four read-only sense bits. These sense bits reflect the actual state of the corresponding function.

Table 113.

Address: 0x13 functional page						Access: user read-only [1]		
	7	6	5	4	3	2	1	0
R	—	—	LDO4 FAULTS	LDO3 FAULTS	V33FAULTS	VSD FAULTS	LDO2 FAULTS	LDO1 FAULTS
W								
Default	0	0	X [2]	X [2]	X [2]	X [2]	X [2]	X [2]
"—" = Unimplemented or reserved								

[1] Read: Anytime
[2] Default value depends on the regulator initial state

Table 114. INTSENSE4 field descriptions

Field	Description
5 LDO4 FAULTS	LDO4 overcurrent sense bit 0 LDO4 in normal operation 1 LDO4 above current limit
4 LDO3 FAULTS	LDO3 overcurrent sense bit 0 LDO3 in normal operation 1 LDO3 above current limit
3 V33FAULTS	V33 overcurrent sense bit 0 V33 in normal operation 1 V33 above current limit
2 VSDFAULTS	VSD overcurrent sense bit 0 VSD in normal operation 1 VSD above current limit
1 LDO2 FAULTS	LDO2 overcurrent sense bit 0 LDO2 in normal operation 1 LDO2 above current limit
0 LDO1 FAULTS	LDO1 overcurrent sense bit 0 LDO1 in normal operation 1 LDO1 above current limit

8.6.5.3.13 Coin cell control register (COINCTL)

This register is used to control the coin cell charger.

All information provided in this document is subject to legal disclaimers.

© 2026 NXP B.V. All rights reserved.

Table 115. Coin cell control register (COINCTL)

Address: 0x1A functional page						Access: user read/write [1]		
	7	6	5	4	3	2	1	0
R W	—	—	—	—	COINCHEN	VCOIN		
Default	0	0	0	0	0	0	0	0
"—" = Unimplemented or reserved								

[1] Read: Anytime
Write: Anytime

Table 116. COINCTL field descriptions

Field	Description
3 COINCHEN	Coin cell charger enable bit 0 Coin cell charger disabled. 1 Coin cell charger enabled.
2:0 VCOIN	**Coin cell charger output voltage selection** — This field is used to set the coin cell charging voltage from 2.50 V to 3.30 V. See Table 63 for all options selectable through these bits.

8.6.5.3.14 Power control register (PWRCTL)

Table 117. Power control register (PWRCTL)

Address: 0x1B functional page						Access: user read/write [1]		
	7	6	5	4	3	2	1	0
R W	REG SCPEN	STBYINV	STBYDLY		ENBDBNC		ENRSTEN	RES TARTEN
Default	0	0	0	1	0	0	0	0

[1] Read: Anytime
Write: Anytime

Table 118. PWRCTL field descriptions

Field	Description
7 REGSCPEN	**Short-circuit protection enable bit** — When REGSCPEN is set to 1, whenever a current limit event occurs on a LDO regulator, this regulator is shutdown. 0 Short-circuit protection disabled 1 Short-circuit protection enabled
6 STBYINV	**STBY inversion bit** —STBYINV is used to control the polarity of the STBY pin. 0 Standby pin is active high 1 Standby pin is active low
4:3 STBYDLY	**STBY delay bits** — STBYDLY is used to set the delay between a standby request from the STBY pin and the entering in standby mode. 00 No delay 01 One 32 kHz period (default)

All information provided in this document is subject to legal disclaimers.

© 2026 NXP B.V. All rights reserved.

Table 118. PWRCTL field descriptions*...continued*

Field	Description
	10 Two 32 kHz periods 11 Three 32 kHz periods
3:2 ENDBNC	**EN programmable debouncer bits** — ENDBNC is used to set the debounce time for the EN input pin. For configuration, see Table 31.
1 ENRSTEN	**EN reset enable bit** — When set to 1, the VR5100 can enter OFF mode when the EN pin is held low for 4 seconds or longer. See EN Pin section for details. 0 Disallow OFF mode after EN held low 1 Allow OFF mode after ENheld low
0 RESTARTEN	**Restart enable bit** — When set to 1, the VR5100 restarts automatically after a power off event generated by the EN (held low for 4 seconds or longer) when PWR_CFG bit = 1. 0 Automatic restart disabled. 1 Automatic restart enabled.

8.6.5.3.15 Embedded memory register A (MEMA)

Table 119. Embedded memory register A (MEMA)

Address: 0x1C functional page					Access: user read/write [1]			
	7	6	5	4	3	2	1	0
R W	MEMA							
Default	0	0	0	0	0	0	0	0

[1] Read: Anytime
Write: Anytime

Table 120. MEMA field descriptions

Field	Description
7:0 MEMA	**Memory bank A** — This register is maintained in case of a main battery loss as long as the coin cell is present. The contents of the embedded memory are reset by COINPORB.

8.6.5.3.16 Embedded memory register B (MEMB)

Table 121. Embedded memory register B (MEMB)

Address: 0x1D functional page					Access: user read/write[1]			
	7	6	5	4	3	2	1	0
R W	MEMB							
Default	0	0	0	0	0	0	0	0

[1] Read: Anytime
Write: Anytime

All information provided in this document is subject to legal disclaimers.

© 2026 NXP B.V. All rights reserved.

Table 122. MEMB field descriptions

Field	Description
7:0 MEMB	**Memory bank B** — This register is maintained in case of a main battery loss as long as the coin cell is present. The contents of the embedded memory are reset by COINPORB.

8.6.5.3.17 Embedded memory register C (MEMC)

Table 123. Embedded memory register C (MEMC)

Address: 0x1E functional page					Access: user read/write [1]			
	7	6	5	4	3	2	1	0
R W	MEMC							
Default	0	0	0	0	0	0	0	0

[1] Read: Anytime
Write: Anytime

Table 124. MEMC field descriptions

Field	Description
7:0 MEMC	**Memory bank C** — This register is maintained in case of a main battery loss as long as the coin cell is present. The contents of the embedded memory are reset by COINPORB.

8.6.5.3.18 Embedded memory register D (MEMD)

Table 125. Embedded memory register D (MEMD)

Address: 0x1F functional page					Access: user read/write [1]			
	7	6	5	4	3	2	1	0
R W	MEMD							
Default	0	0	0	0	0	0	0	0

[1] Read: Anytime
Write: Anytime

Table 126. MEMD field descriptions

Field	Description
7:0 MEMD	**Memory bank D** — This register is maintained in case of a main battery loss as long as the coin cell is present. The contents of the embedded memory are reset by COINPORB.

8.6.5.3.19 SW1 voltage control register (SW1VOLT)

This register is used to set the output voltage of the SW1 regulator in normal operation.

Table 127. SW1 voltage control register (SW1VOLT)

Address: 0x20 functional page	Access: user read/write [1]

All information provided in this document is subject to legal disclaimers.

© 2026 NXP B.V. All rights reserved.

Table 127. SW1 voltage control register (SW1VOLT)*...continued*

	7	6	5	4	3	2	1	0
R W	—	—	—	SW1				
Default	0	0	0	X [2]	X [2]	X [2]	X [2]	X [2]
"—" = Unimplemented or reserved								

[1] Read: Anytime
Write: Anytime
[2] Default value depends on OTP content.

Table 128. SW1VOLT field descriptions

Field	Description
4:0 SW1	**SW1 output voltage** — Refer to Table 46.

8.6.5.3.20 SW1 standby voltage control register (SW1STBY)

This register is used to set the output voltage of the SW1 regulator in standby operation.

Table 129. SW1 standby voltage control register (SW1STBY)

Address: 0x21 functional page						Access: user read/write [1]		
	7	6	5	4	3	2	1	0
R W	—	—	—	SW1STBY				
Default	0	0	0	X [2]	X [2]	X [2]	X [2]	X [2]
"—" = Unimplemented or reserved								

[1] Read: Anytime
Write: Anytime
[2] Default value depends on OTP content

Table 130. SW1STBY field descriptions

Field	Description
4:0 SW1STBY	**SW1 standby output voltage** — Refer to Table 46

8.6.5.3.21 SW1 Sleep mode voltage control register (SW1OFF)

This register is used to set the output voltage of the SW1 regulator in Sleep mode operation.

Table 131. SW1 Sleep mode voltage control register (SW1OFF)

Address: 0x22 functional page						Access: user read/write [1]		
	7	6	5	4	3	2	1	0
R	—	—	—	SW1OFF				

All information provided in this document is subject to legal disclaimers.

© 2026 NXP B.V. All rights reserved.

Table 131. SW1 Sleep mode voltage control register (SW1OFF)*...continued*

W								
Default	0	0	0	X [2]	X [2]	X [2]	X [2]	X [2]
"—" = Unimplemented or reserved								

[1] Read: Anytime
Write: Anytime
[2] Default value depends on OTP content

Table 132. SW1OFF field descriptions

Field	Description
4:0 SW1STBY	**SW1 Sleep mode output voltage** — Refer to Table 46

8.6.5.3.22 SW1 Switching mode selector register (SW1MODE)

This register is used to set the switching mode of the SW1 regulator.

Table 133. SW1 Switching mode selector register (SW1MODE)

Address: 0x23 functional page					Access: user read/write [1]			
	7	6	5	4	3	2	1	0
R W	—	—	SW1 OMODE	—	SW1MODE			
Default	0	0	0	0	X [2]	X [2]	X [2]	X [2]
"—" = Unimplemented or reserved								

[1] Read: Anytime
Write: Anytime
[2] Default value depends on OTP content

Table 134. SW1MODE field descriptions

Field	Description
5 SW1OMODE	**SW1 Off mode bit**— This bit configures the mode entered by SW1 after a turn-off event 0 OFF mode entered after a turn-off event. 1 Sleep mode entered after a turn-off event.
3:0 SW1MODE	**SW1 Switching mode selector** — Refer to Table 41

8.6.5.3.23 SW1 configuration register (SW1CONF)

This register is used to configure DVS, switching frequency, phase and current limit settings of the SW1 regulator.

Table 135. SW1 configuration register (SW1CONF)

Address: 0x24 functional page					Access: user read/write [1]			
	7	**6**	**5**	**4**	**3**	**2**	**1**	**0**

All information provided in this document is subject to legal disclaimers.

© 2026 NXP B.V. All rights reserved.

Table 135. SW1 configuration register (SW1CONF)*...continued*

R W		SW1 DVSSPEED	SW1PHASE		SW1FREQ			SW1ILIM
Default	0	X [2]	0	0	X [2]	X [2]	0	X [2]
"—" = Unimplemented or reserved								

[1] Read: Anytime
Write: Anytime
[2] Default value depends on OTP content

Table 136. SW1CONF field descriptions

Field	Description
6 SW1 DVSSPEED	**SW1 DVS speed bit**— This bit configures the DVS stepping rates speed for SW1. Refer to the Table 42. 0 25 mV step each 2.0 µs. 1 25 mV step each 4.0 µs.
5:4 SW1PHASE	**SW1 phase clock bit**— SW1PHASE is used to set the phase clock for SW1. Refer to Table 43.
3:2 SW1FREQ	**SW1 switching frequency**— SW1PHASE is used to set the desired switching frequency for SWA. Refer to Table 45.
0 SW1ILIM	**SW1 current limiter bit**— This bit configures the current limit for SW1. 0 4 A (typ). 1 2.0 A (typ).

8.6.5.3.24 SW1 configuration register (SW1CONF)

This register is used to configure DVS, switching frequency, phase and current limit settings of the SW1 regulator.

Table 137. SW1 configuration register (SW1CONF)

Address: 0x32 functional page					Access: user read/write X [1]			
	7	6	5	4	3	2	1	0
R W	SW1DVSSPEED		SW1PHASE		SW1FREQ		—	SW1ILIM
Default	0	X [2]	0	0	X [2]	X [2]	0	X [2]
"—" = Unimplemented or reserved								

[1] Read: Anytime
Write: Anytime
[2] Default value depends on OTP content

Table 138. SW1CONF field descriptions

Field	Description
6 SW1 DVSSPEED	**SW1 DVS speed bit**— This bit configures the DVS stepping rates speed for SW1. Refer to the .Table 42 0 25 mV step each 2.0 µs. 1 25 mV step each 4.0 µs.

All information provided in this document is subject to legal disclaimers.

© 2026 NXP B.V. All rights reserved.

Table 138. SW1CONF field descriptions...*continued*

Field	Description
5:4 SW1PHASE	**SW1 phase clock bit**— SW1PHASE is used to set the phase clock for SW1. Refer to .Table 43
3:2 SW1FREQ	**SW1 switching frequency**— SW1PHASE is used to set the desired switching frequency for SW1. Refer to Table 45.
0 SW1ILIM	**SW1 current limiter bit**— This bit configures the current limit for SW1. 0 4.0 A (typ). 1 2.0 A (typ).

8.6.5.3.25 SW2 voltage control register (SW2VOLT)

This register is used to set the output voltage of the SW2 regulator in normal operation.

Table 139. SW2 voltage control register (SW2VOLT)

Address: 0x35 functional page						Access: user read/write [1]		
	7	6	5	4	3	2	1	**0**
R W	—	—	SW2_HI	SW2				
Default	0	0	X [2]	X [2]	X [2]	X [2]	X [2]	X [2]
"—" = Unimplemented or reserved								

[1] Read: Anytime
Write: Anytime
[2] Default value depends on OTP content

Table 140. SW2VOLT field descriptions

Field	Description
4:0 SW2	**SW2 output voltage** — Refer to Table 48.
5 SW2_HI	**SW2 output voltage range** —This bit configures the range of SW2 Output voltage. Refer to Table 48. 0 Low output voltage settings 1 High output voltage settings

8.6.5.3.26 SW2 standby voltage control register (SW2STBY)

This register is used to set the output voltage of the SW2 regulator in standby operation.

Table 141. SW2 standby voltage control register (SW2STBY)

Address: 0x36 functional page						Access: user read/write [1]		
	7	6	5	4	3	2	1	0
R W	—	—	SW2_HI	SW2STBY				
Default	0	0	X [2]	X [2]	X [2]	X [2]	X [2]	X [2]
"—" = Unimplemented or reserved								

All information provided in this document is subject to legal disclaimers.

© 2026 NXP B.V. All rights reserved.

[1] Read: Anytime
Write: Anytime
[2] Default value depends on OTP content

Table 142. SW2STBY field descriptions

Field	Description
4:0 SW2STBY	**SW2 standby output voltage** — Refer to Table 48.
5 SW2_HI	**SW2 output voltage range** —This bit configures the range of SW2 output voltage. Refer to Table 48. 0 Low output voltage settings 1 High output voltage settings

8.6.5.3.27 SW2 Sleep mode voltage control register (SW2OFF)

This register is used to set the output voltage of the SW2 regulator in Sleep mode operation.

Table 143. SW2 Sleep mode voltage control register (SW2OFF)

Address: 0x37 functional page						Access: user read/write [1]		
	7	6	5	4	3	2	1	0
R W	—	—	SW2_HI	SW2OFF				
Default	0	0	X [2]	X [2]	X [2]	X [2]	X [2]	X [2]
"—" = Unimplemented or reserved								

[1] Read: Anytime
Write: Anytime
[2] Default value depends on OTP content

Table 144. SW2OFF field descriptions

Field	Description
4:0 SW2STBY	**SW2 Sleep mode output voltage** — Refer to Table 48.
5 SW2_HI	**SW2 output voltage range** —This bit configures the range of SW2 output voltage. Refer to Table 48. 0 Low output voltage settings 1 High output voltage settings

8.6.5.3.28 SW2 Switching mode selector register (SW2MODE)

This register is used to set the switching mode of the SW2 regulator.

Table 145. SW2 Switching mode selector register (SW2MODE)

Address: 0x38 functional page					Access: user read/write [1]			
	7	6	5	4	3	2	1	0
R W	—	—	SW2 OMODE	—	SW2MODE			

All information provided in this document is subject to legal disclaimers.

© 2026 NXP B.V. All rights reserved.

Table 145. SW2 Switching mode selector register (SW2MODE)*...continued*

Default	0	0	0	0	X [2]	X [2]	X [2]	X [2]
"—" = Unimplemented or reserved								

[1] Read: Anytime
Write: Anytime
[2] Default value depends on OTP content

Table 146. SW2MODE field descriptions

Field	Description
5 SW2OMODE	**SW2 Off mode bit**— This bit configures the mode entered by SW2 after a turn-off event 0 OFF mode entered after a turn-off event. 1 Sleep mode entered after a turn-off event.
3:0 SW2MODE	**SW2 Switching mode selector** — Refer to Table 41.

8.6.5.3.29 SW2 configuration register (SW2CONF)

This register is used to configure DVS, switching frequency, phase and current limit settings of the SW2 regulator.

Table 147. SW2 configuration register (SW2CONF)

Address: 0x39 functional page					Access: user read/write [1]			
	7	6	5	4	3	2	1	0
R W	—	SW2 DVSSPEED	SW2PHASE		SW2FREQ		—	SW2ILIM
Default	0	X [2]	0	0	X [2]	X [2]	0	X [2]
"—" = Unimplemented or reserved								

[1] Read: Anytime
Write: Anytime
[2] Default value depends on OTP content

Table 148. SW2CONF field descriptions

Field	Description
6 SW2 DVSSPEED	SW2 DVS Speed bit- This bit configures the DVS stepping rates speed for SW2. Refer to the Table 42. 0 25 mV step each 2.0 µs. 1 25 mV step each 4.0 µs.
5:4 SW2PHASE	**SW2 phase clock bit**— SW2PHASE is used to set the phase clock for SW2. Refer to Table 43.
3:2 SW2FREQ	**SW2 switching frequency**— SW2PHASE is used to set the desired switching frequency for SW2. Refer to Table 45.
0 SW2ILIM	**SW2 current limiter bit**— This bit configures the current limit for SW2. 0 2.75 A (typ). 1 2.0 A (typ).

All information provided in this document is subject to legal disclaimers.

© 2026 NXP B.V. All rights reserved.

8.6.5.3.30 SW3 voltage control register (SW3VOLT)

This register is used to set the output voltage of the SW3 regulator in normal operation.

Table 149. SW3 voltage control register (SW3VOLT)

Address: 0x3C functional page						Access: user read/write [1]		
	7	6	5	4	3	2	1	0
R W	—	—	—	SW3				
Default	0	0	0	X [2]	X [2]	X [2]	X [2]	X [2]
"—" = Unimplemented or reserved								

[1] Read: Anytime
Write: Anytime
[2] Default value depends on OTP content

Table 150. SW3VOLT field descriptions

Field	Description
4:0 SW3	**SW3 output voltage** — Refer to Section 8.3.7.7.

8.6.5.3.31 SW3 standby voltage control register (SW3STBY)

This register is used to set the output voltage of the SW3 regulator in standby operation.

Table 151. SW3 standby voltage control register (SW3STBY)

Address: 0x3D functional page						Access: user read/write [1]		
	7	6	5	4	3	2	1	0
R W	—	—	—	SW3STBY				
Default	0	0	0	X [2]	X [2]	X [2]	X [2]	X [2]
"—" = Unimplemented or reserved								

[1] Read: Anytime
Write: Anytime
[2] Default value depends on OTP content

Table 152. SW3STBY field descriptions

Field	Description
4:0 SW3STBY	**SW3 standby output voltage** — Refer to Section 8.3.7.7.

8.6.5.3.32 SW3 Sleep mode voltage control register (SW3OFF)

This register is used to set the output voltage of the SW3 regulator in sleep mode operation.

All information provided in this document is subject to legal disclaimers.

© 2026 NXP B.V. All rights reserved.

Table 153. SW3 Sleep mode voltage control register (SW3OFF)

Address: 0x3E functional page						Access: user read/write [1]		
	7	6	5	4	3	2	1	0
R W	—	—	—	SW3OFF				
Default	0	0	0	X [2]	X [2]	X [2]	X [2]	X [2]
"—" = Unimplemented or reserved								

[1] Read: Anytime
Write: Anytime
[2] Default value depends on OTP content

Table 154. SW3OFF field descriptions

Field	Description
4:0 SW3STBY	**SW3 Sleep mode output voltage** — Refer to Table 50.

8.6.5.3.33 SW3 Switching mode selector register (SW3MODE)

This register is used to set the switching mode of the SW3 regulator.

Table 155. SW3 Switching mode selector register (SW3MODE)

Address: 0x3F functional page					Access: user read/write [1]			
	7	6	5	4	3	2	1	0
R W	—	—	SW3 OMODE	—	SW3MODE			
Default	0	0	0	0	X [2]	X [2]	X [2]	X [2]
"—" = Unimplemented or reserved								

[1] Read: Anytime
Write: Anytime
[2] Default value depends on OTP content

Table 156. SW3MODE field descriptions

Field	Description
5 SW3OMODE	**SW3 Off mode bit**— This bit configures the mode entered by SW3 after a turn-off event 0 OFF mode entered after a turn-off event. 1 Sleep mode entered after a turn-off event.
3:0 SW3MODE	**SW3 Switching mode selector** — Refer to Table 41.

8.6.5.3.34 SW3 configuration register (SW3CONF)

This register is used to configure DVS, switching frequency, phase and current limit settings of the SW3 regulator.

All information provided in this document is subject to legal disclaimers.

© 2026 NXP B.V. All rights reserved.

Table 157. SW3 configuration register (SW3CONF)

Address: 0x40 functional page					Access: user read/write [1]			
	7	6	5	4	3	2	1	0
R W	—	SW3 DVSSPEED	SW3PHASE		SW3FREQ		—	SW3ILIM
Default	0	X [2]	0	0	X [2]	X [2]	0	X [2]
"—" = Unimplemented or reserved								

[1] Read: Anytime
Write: Anytime
[2] Default value depends on OTP content

Table 158. SW3CONF field descriptions

Field	Description
6 SW3 DVSSPEED	**SW3 DVS speed bit**— This bit configures the DVS stepping rates speed for SW3. Refer to the Table 42. 0 25 mV step each 2.0 µs. 1 25 mV step each 4.0 µs.
5:4 SW3PHASE	**SW3 phase clock bit**— SW3PHASE is used to set the phase clock for SW3. Refer to Table 43.
3:2 SW3FREQ	**SW3 switching frequency**— SW3PHASE is used to set the desired switching frequency for SW3. Refer to Table 45.
0 SW3ILIM	**SW3 current limiter bit**— This bit configures the current limit for SW3. 0 2.75 A (typ). 1 2.0 A (typ).

8.6.5.3.35 SWBST setup and control register (SWBSTCTL)

This register is used to configure both the output voltage and switching modes of the SWBST regulator.

Table 159. SWBST configuration register (SWBSTCTL)

Address: 0x66 functional page					Access: user read/write [1]			
	7	6	5	4	3	2	1	0
R W	—	SWBST1STBYMODE		—	SWBST1MODE		SWBST1VOLT	
Default	0	X [2]	X [2]	0	X [2]	X [2]	X [2]	X [2]
"—" = Unimplemented or reserved								

[1] Read: Anytime
Write: Anytime
[2] Default value depends on OTP content

Table 160. SWBSTCTL Field Descriptions

Field	Description
6:5	**SWBST Switching mode in standby**— SWBST1MODE is used to set the switching mode in Standby mode.

All information provided in this document is subject to legal disclaimers.

© 2026 NXP B.V. All rights reserved.

Table 160. SWBSTCTL Field Descriptions...*continued*

Field	Description
SWBST1 STBYMODE	00 OFF 01 PFM 10 Auto [1] 11 APS
3:2 SWBST1MODE	**SWBST Switching mode in normal operation**— SWBST1MODE is used to set the switching mode on Normal operation. 00 OFF 01 PFM 10 Auto [1] 11 APS
1:0 SWBST1VOLT	**SWBST output voltage**— SWBST1VOLT is used to set the output voltage for SWBST. 00 5.000 V (typ). 01 5.050 V (typ). 10 5.100 V (typ). 11 5.150 V (typ).

[1] In Auto mode, the controller automatically switches between PFM and APS modes depending on the load current. Regulator switches in Auto mode if enabled in the startup sequence

8.6.5.3.36 REFOUT control register (REFOUTCTL)

This register is used to control the REFOUT supply operation.

Table 161. REFOUT control register (REFOUTCTL)

Address: 0x6A functional page					Access: user read/write [1]			
	7	6	5	4	3	2	1	0
R	—	—	—	—	—	—	—	REFOUTEN
W								
Default	0	0	0	0	0	0	0	0
"—" = Unimplemented or reserved								

[1] Read: Anytime
Write: Anytime

Table 162. REFOUT field descriptions

Field	Description
0 REFOUTEN	**REFOUT supply enable bit**— REFOUTEN is used to enable or disable the REFOUT supply. 0 REFOUT supply disabled 1 REFOUT supply enabled

8.6.5.3.37 VSNVS control register (VSNVSCTL)

This register is used to control the VSNVS supply operation.

Table 163. VSNVS control register (VSNVSCTL)

Address: 0x6B functional page	Access: user read/write [1]

All information provided in this document is subject to legal disclaimers.

© 2026 NXP B.V. All rights reserved.

Table 163. VSNVS control register (VSNVSCTL)*...continued*

	7	6	5	4	3	2	1	0
R W	—	—	—	—	—	VSNVSVOLT		
Default	0	0	0	0	0	X [2]	X [2]	X [2]
"—" = Unimplemented or reserved								

[1] Read: Anytime
Write: Anytime
[2] Default value depends on OTP content

Table 164. VSNVSCTL field descriptions

Field	Description
2:0 VSNVSVOLT	**VSNVS output voltage configuration**— VSNVSVOLT is used to configure the VSNVS output voltage. Values below are typical voltages. 000 = RSVD 001 = RSVD 010 = RSVD 011 = RSVD 100 = RSVD 101 = RSVD 110 = 3.0 V (default) 111 = RSVD

8.6.5.3.38 LDO1 control register (LDO1CTL)

This register is used to configure output voltage, normal and standby mode operation of the LDO1 regulator.

Table 165. LDO1 control register (LDO1CTL)

Address: 0x6C functional page						Access: user read/write [1]		
	7	6	5	4	3	2	1	0
R W	LDO1 OMODE	LDO1LPWR	LDO1STBY	LDO1EN	LDO1			
Default	0	0	0	X [2]	X [2]	X [2]	X [2]	X [2]

[1] Read: Anytime
Write: Anytime
[2] Default value depends on OTP content

Table 166. LDO1CTL field descriptions

Field	Description
7 LDO1OMODE	**LDO1 OFF mode bit**—LDO1OMODE is used to configure LDO1 operating mode when a EN turn-off event occurs. 0 LDO1 in OFF mode if a EN turn off event occurs 1 LDO1 in Sleep mode if a EN turn off event occurs
6	**LDO1 Low-power mode enable bit**— When LDO1LPWR is set to 1, LDO1 can enter Low-power mode per the conditions in the Table 59.

All information provided in this document is subject to legal disclaimers.

© 2026 NXP B.V. All rights reserved.

Table 166. LDO1CTL field descriptions*...continued*

Field	Description
LDO1LPWR	0 Low-power mode disabled 1 Low-power mode enabled
5 LDO1STBY	**LDO1 standby enable bit**— When LDO1STBY is set to 1, LDO1 is turned off during Standby mode. Refer to Table 59. 0 LDO1 is ON during Standby mode. 1 LDO1 is OFF during Standby mode.
4 LDO1EN	**LDO1 enable bit** — LDO1EN is used to enable or disable the LDO1 regulator. 0 LDO1 disabled 1 LDO1 enabled
3:0 LDO1	**LDO1 output voltage configuration**— Refer to Table 55.

8.6.5.3.39 LDO2 control register (LDO2CTL)

This register is used to configure output voltage, Normal and Standby mode operation of the LDO2 regulator.

Table 167. LDO2 control register (LDO2CTL)

Address: 0x6D functional page						Access: user read/write [1]		
	7	6	5	4	3	2	1	0
R W	LDO2 OMODE	LDO2LPWR	LDO2STBY	LDO2EN	LDO2			
Default	0	0	0	X [2]	X [2]	X [2]	X [2]	X [2]

[1] Read: Anytime
Write: Anytime
[2] Default value depends on OTP content

Table 168. LDO2CTL field descriptions

Field	Description
7 LDO2OMODE	**LDO2 OFF mode bit**—LDO2OMODE is used to configure LDO2 operating mode when a EN turn-off event occurs. 0 LDO2 in OFF mode if a EN turn off event occurs 1 LDO2 in Sleep mode if a EN turn off event occurs
6 LDO2LPWR	**LDO2 low power mode enable bit**— When LDO2LPWR is set to 1, LDO2 can enter Low-power mode per the conditions in the LDO Control table. 0 Low-power mode disabled 1 Low-power mode enabled
5 LDO2STBY	**LDO2 standby enable bit**— When LDO2STBY is set to 1, LDO2 is turned off during Standby mode. Refer to Table 59. 0 LDO2 is ON during Standby mode. 1 LDO2 is OFF during Standby mode.
4 LDO2EN	**LDO2 enable bit** — LDO2EN is used to enable or disable the LDO2 regulator. 0 LDO2 disabled 1 LDO2 enabled
3:0	**LDO2 output voltage configuration**— Refer to Table 55.

All information provided in this document is subject to legal disclaimers.

© 2026 NXP B.V. All rights reserved.

Table 168. LDO2CTL field descriptions...*continued*

Field	Description
LDO2	

8.6.5.3.40 VSD control register (VSDCTL)

This register is used to configure output voltage, Normal and Standby mode operation of the VSD regulator.

Table 169. VSD control register (VSDCTL)

Address: 0x6E functional page					Access: user read/write [1]			
	7	6	5	4	3	2	1	0
R W	VSD OMODE	VSDLPWR	VSDSTBY	VSDEN	—	—	VSD	
Default	0	0	0	X [2]	0	0	X [2]	X [2]
"—" = Unimplemented or reserved								

[1] Read: Anytime
Write: Anytime
[2] Default value depends on OTP content

Table 170. VSDCTL field descriptions

Field	Description
7 VSDOMODE	**VSD OFF mode bit**— VSDOMODE is used to configure VSD operating mode when a EN turn-off event occurs. 0 VSD in OFF mode if a EN turn off event occurs 1 VSD in Sleep mode if a EN turn off event occurs
6 VSDLPWR	**VSD low-power mode enable bit**— When VSDLPWR is set to 1, VSD can enter Low-power mode per the conditions in Table 58. 0 Low-power mode disabled 1 Low-power mode enabled
5 VSDSTBY	**VSD standby enable bit**— When VSDSTBY is set to 1, VSD is turned off during Standby mode. Refer to Table 58. 0 VSD is ON during Standby mode. 1 VSD is OFF during Standby mode.
4 VSDEN	**VSD enable bit** — VSDEN is used to enable or disable the VSD regulator. 0 VSD disabled 1 VSD enabled
1:0 VSD	**VSD output voltage configuration**— Refer to Table 58.

8.6.5.3.41 V33 control register (V33CTL)

This register is used to configure output voltage, Normal and Standby mode operation of the V33 regulator.

Table 171. V33 control register (V33CTL)

Address: 0x6F functional page					Access: user read/write [1]			
	7	6	5	4	3	2	1	0

All information provided in this document is subject to legal disclaimers.

© 2026 NXP B.V. All rights reserved.

Table 171. V33 control register (V33CTL)*...continued*

R W	V33OMODE	V33LPWR	V33STBY	V33EN	—	—	V33	
Default	0	0	0	X [2]	0	0	X [2]	X [2]
"—" = Unimplemented or reserved								

[1] Read: Anytime
Write: Anytime
[2] Default value depends on OTP content

Table 172. V33CTL field descriptions

Field	Description
7 V33OMODE	**V33 OFF mode bit**— V33OMODE is used to configure V33 operating mode when a turn-off event (using pin EN) occurs. 0 V33 in OFF mode if a PWRON turn-off event (using pin EN) occurs 1 V33 in Sleep mode if a PWRON turn-off event (using pin EN) occurs
6 V33LPWR	**V33 Low-power mode enable bit**— When V33LPWR is set to 1, V33 can enter Low-power mode per the conditions in the Table 57. 0 Low-power mode disabled 1 Low-power mode enabled
5 V33STBY	**V33 standby enable bit**— When V33STBY is set to 1, V33 is turned off during Standby mode. Refer to Table 57. 0 V33 is ON during Standby mode. 1 V33 is OFF during Standby mode.
4 V33EN	**V33 enable bit** — V33EN is used to enable or disable the V33 regulator. 0 V33 disabled 1 V33 enabled
1:0 V33	**V33 output voltage configuration**— Refer to Table 57.

8.6.5.3.42 LDO3 control register (LDO3CTL)

This register is used to configure output voltage, Normal and Standby mode operation of the LDO3 regulator.

Table 173. LDO3 control register (LDO3CTL)

Address: 0x70 functional page						Access: user read/write [1]		
	7	6	5	4	3	2	1	0
R W	LDO3 OMODE	LDO3LPWR	LDO3STBY	LDO3EN	LDO3			
Default	0	0	0	X [2]	X [2]	X [2]	X [2]	X [2]

[1] Read: Anytime
Write: Anytime
[2] Default value depends on OTP content

All information provided in this document is subject to legal disclaimers.

© 2026 NXP B.V. All rights reserved.

Table 174. LDO3CTL field descriptions

Field	Description
7 LDO3OMODE	**LDO3 OFF mode bit**—LDO3OMODE is used to configure LDO3 operating mode when a EN turn-off event occurs. 0 LDO3 in OFF mode if a EN turn off event occurs 1 LDO3 in Sleep mode if a EN turn off event occurs
6 LDO3LPWR	**LDO3 Low-power mode enable bit**— When LDO3LPWR is set to 1, LDO3 can enter Low-power mode per the conditions in Table 59. 0 Low-power mode disabled 1 Low-power mode enabled
5 LDO3STBY	**LDO3 standby enable bit**— When LDO3STBY is set to 1, LDO3 is turned off during Standby mode. Refer to Table 59. 0 LDO3 is ON during Standby mode. 1 LDO3 is OFF during Standby mode.
4 LDO3EN	**LDO3 enable bit** — LDO3EN is used to enable or disable the LDO3 regulator. 0 LDO3 disabled 1 LDO3 enabled
3:0 LDO3	**LDO3 output voltage configuration**— Refer to Table 56.

8.6.5.3.43 LDO4 control register (LDO4CTL)

This register is used to configure output voltage, Normal and Standby mode operation of the LDO4 regulator.

Table 175. LDO4 control register (LDO4CTL)

Address: 0x71 functional page						Access: user read/write [1]		
	7	6	5	4	3	2	1	0
R W	LDO4 OMODE	LDO4LPWR	LDO4STBY	LDO4EN	LDO4			
Default	0	0	0	X [2]	X [2]	X [2]	X [2]	X [2]

[1] Read: Anytime
Write: Anytime
[2] Default value depends on OTP content

Table 176. LDO4CTL field descriptions

Field	Description
7 LDO4OMODE	**LDO4 OFF mode bit**—LDO4OMODE is used to configure LDO4 operating mode when a EN turn-off event occurs. 0 LDO4 in OFF mode if a EN turn off event occurs 1 LDO4 in Sleep mode if a EN turn off event occurs
6 LDO4LPWR	**LDO4 Low-power mode enable bit**— When LDO4LPWR is set to 1, LDO4 can enter Low-power mode per the conditions in Table 59. 0 Low-power mode disabled 1 Low-power mode enabled
5 LDO4STBY	**LDO4 standby enable bit**— When LDO4STBY is set to 1, LDO4 is turned off during Standby mode. Refer to Table 59.

All information provided in this document is subject to legal disclaimers.

© 2026 NXP B.V. All rights reserved.

Table 176. LDO4CTL field descriptions...*continued*

Field	Description
	0 LDO4 is ON during Standby mode. 1 LDO4 is OFF during Standby mode.
4 LDO4EN	**LDO4 Enable bit** — LDO4EN is used to enable or disable the LDO4 regulator. 0 LDO4 disabled 1 LDO4 enabled
3:0 LDO4	**LDO4 output voltage configuration**— Refer to Table 56.

8.6.5.3.44 Page selection register

This register is used to access the extended register pages.

Table 177. Page Selection Register

Address: 0x7F functional page					Access: user read/write [1]			
	7	6	5	4	3	2	1	0
R W	—	—	—	—	PAGE			
Default	0	0	0	0	0	0	0	0
"—" = Unimplemented or reserved								

[1] Read: Anytime
Write: Anytime

Table 178. Page register field descriptions

Field	Description
3:0 PAGE	**Register page selection** — The PAGE field is used to select one of the three available register pages. 0000 Functional page selected 0001 Extended page 1 selected 0010 Extended page 2 selected

8.6.6 Register map

The register map is comprised of thirty-two pages, and its address and data fields are each eight bits wide. Only the first two pages can be accessed. On each page, registers 0 to 0x7F are referred to as 'functional', and registers 0x80 to 0xFF as 'extended'. On each page, the functional registers are the same, but the extended registers are different. To access registers in Extended page 1, one must first write 0x01 to the page register at address 0x7F, and to access registers Extended page 2, one must first write 0x02 to the page register at address 0x7F. To access the Functional page from one of the extended pages, no write to the page register is necessary.

Registers missing in the sequence are reserved; reading from them returns a value 0x00, and writing to them has no effect. The contents of all registers are given in the tables defined in this chapter; each table is structure as follows:

Name: Name of the bit

Bit #: The bit location in the register (7-0)

All information provided in this document is subject to legal disclaimers.

© 2026 NXP B.V. All rights reserved.

R/W: Read / Write access and control

- R is read-only access
- R/W is read and write access
- RW1C is read and write access with write 1 to clear

Reset: Reset signals are color coded based on the following legend.

Bits reset by SC and VDIG_PORB
Bits reset by EN or loaded default or OTP configuration
Bits reset by DIGRESETB
Bits reset by PORB
Bits reset by VDIG_PORB
Bits reset by POR or OFFB

Default: The value after reset, as noted in the Default column of the memory map.

- Fixed defaults are explicitly declared as 0 or 1.
- "X" corresponds to Read/Write bits initialized at start-up, based on the OTP fuse settings or default if V_{DDOTP} = 1.5 V. Bits are subsequently I^2C modifiable, when their reset has been released. "X" may also refer to bits which may have other dependencies. For example, some bits may depend on the version of the IC, or a value from an analog block, for instance the sense bits for the interrupts.

8.6.6.1 Register map

Table 179. Functional page

				BITS[7:0]							
Address	Register name	R/W	Default	7	6	5	4	3	2	1	0
00	DeviceID	R	8'b0011_0000	–	–	–	–	DEVICE ID [3:0]			
				0	0	1	1	0	0	0	0
03	SILICON-REVID	R	8'b0001_0000	FULL_LAYER_REV[3:0]				METAL_LAYER_REV[3:0]			
				0	0	0	1	0	0	0	0
04	FABID	R	8'b0000_0000	–	–	–	–	FAB[1:0]		FIN[1:0]	
				0	0	0	0	0	0	0	0
05	INTSTAT0	RW1C	8'b0000_0000	–	–	THERM130I	THERM125I	THERM120I	THERM110I	LOWVINI	ENI
				0	0	0	0	0	0	0	0
06	INTMASK0	R/W	8'b0011_1111	–	–	THERM130M	THERM125M	THERM120M	THERM110M	LOWVINM	ENM
				0	0	1	1	1	1	1	1
07	INT-SENSE0	R	8'b00xx_xxxx	VDDOTPS	ICTESTS	THERM130S	THERM125S	THERM120S	THERM110S	LOWVINS	ENS
				0	0	x	x	x	x	x	x
08	INTSTAT1	RW1C	8'b0000_0000	–	–	–	SW3 FAULTI	SW2 FAULTI	–	SW1 FAULTI	SW1 FAULTI
				0	0	0	0	0	x	0	0
09	INTMASK1	R/W	8'b0111_1111	–	–	–	SW3 FAULTM	SW2 FAULTM	–	SW1 FAULTM	SW1 FAULTM
				0	1	1	1	1	1	1	1
0A	INT-SENSE1	R	8'b0xxx_xxxx	–	–	–	SW3 FAULTS	SW2 FAULTS	–	SW1 FAULTS	SW1 FAULTS

All information provided in this document is subject to legal disclaimers.

© 2026 NXP B.V. All rights reserved.

Table 179. Functional page...*continued*

				BITS[7:0]							
Address	Register name	R/W	Default	7	6	5	4	3	2	1	0
				0	x	x	x	x	x	x	x
0E	INTSTAT3	RW1C	8'b0000_0000	OTP_ECCI	OTP AUTO BLOW DONE	–	–	–	–	–	SWBSTFAULTI
				0	0	0	0	0	0	0	0
0F	INTMASK3	R/W	8'b1100_0101	OTP_ECCM	OTP_AUTO_BLOW_DONEM	–	–	–	–	–	SWBSTFAULTM
				1	1	0	0	0	1	0	1
10	INT-SENSE3	R	8'b0000_000x	OTP_ECCS	OTP_AUTO_BLOW_DONES	–	–	–	–	–	SWBSTFAULTS
				0	0	0	0	0	0	0	0
11	INTSTAT4	RW1C	8'b0000_0000	–	–	LDO4 FAULTI	LDO3 FAULTI	V33FAULTI	VSD FAULTI	LDO2 FAULTI	LDO1 FAULTI
				0	0	0	0	0	0	0	0
12	INTMASK4	R/W	8'b0011_1111	–	–	LDO4 FAULTM	LDO3 FAULTM	V33 FAULTM	VSD FAULTM	LDO2 FAULTM	LDO1 FAULTM
				0	0	1	1	1	1	1	1
13	INT-SENSE4	R	8'b00xx_xxxx	–	–	LDO4 FAULTS	LDO3 FAULTS	V33 FAULTS	VSD FAULTS	LDO2 FAULTS	LDO1 FAULTS
				0	0	x	x	x	x	x	x
1A	COINCTL	R/W	8'b0000_0000	–	–	–	–	COI NCHEN	VCOIN[2:0]		
				0	0	0	0	0	0	0	0
1B	PWRCTL	R/W	8'b0001_0000	REG SCPEN	STBYINV	STBYDLY[1:0]		ENBDBNC[1:0]		ENRSTEN	RES TARTEN
				0	0	0	1	0	0	0	0
1C	MEMA	R/W	8'b0000_0000	MEMA[7:0]							
				0	0	0	0	0	0	0	0
1D	MEMB	R/W	8'b0000_0000	MEMB[7:0]							
				0	0	0	0	0	0	0	0
1E	MEMC	R/W	8'b0000_0000	MEMC[7:0]							
				0	0	0	0	0	0	0	0
1F	MEMD	R/W	8'b0000_0000	MEMD[7:0]							
				0	0	0	0	0	0	0	0
20	SW1VOLT	R/W	8'b000x_xxxx	–	–	–	SW1[4:0]				
				0	0	0	–	–	–	–	–
21	SW1STBY	R/W	8'b000x_xxxx	–	–	–	SW1STBY[4:0]				
				0	0	0	–	–	–	–	–
22	SW1OFF	R/W	8'b000x_xxxx	–	–	–	SW1OFF[4:0]				
				0	0	0	–	–	–	–	–
23	SW1-MODE	R/W	8'b0000_xxxx	–	–	SW1 OMODE	–	SW1MODE[3:0]			
				0	0	0	x	–	–	–	–
24	SW1CONF	R/W	8'bxx00_0100	–	SW1 DVSSPEED	SW1PHASE[1:0]		SW1FREQ[1:0]		–	SW1ILIM

All information provided in this document is subject to legal disclaimers.

© 2026 NXP B.V. All rights reserved.

Table 179. Functional page...*continued*

				BITS[7:0]							
Address	Register name	R/W	Default	7	6	5	4	3	2	1	0
				x	-1	0	0	–	–	0	0
32	SW1CONF	R/W	8'bx100_0100	–	SW1 DVSSPEED	SW1PHASE[1:0]		SW1FREQ[1:0]-		–	SW1ILIM
				x	–	0	0	–	–	0	0
35	SW2VOLT	R/W	8'b0xxx_0110	–	–	–	–	SW2_HI	SW2[2:0]		
				0	x	x	x	–	–	–	–-
36	SW2STBY	R/W	8'b0xxx_xxxx	–	–	–	–	SW2_HI	SW2STBY[2:0]		
				0	x	x	x	–	–	–	–-
37	SW2OFF	R/W	8'b0xxx_xxxx	–	–	–	–	SW2_HI	SW2STBY[2:0]		
				0	x	x	x	–	–	–	–-
38	SW2-MODE	R/W	8'b0010_1000	–	–	SW2 OMODE	–	SW2MODE[3:0]			
				0	0	1	0	1	0	0	0
39	SW2CONF	R/W	8'bxx01_0100	–	SW2DVS SPEED	SW2PHASE[1:0]		SW2FREQ[1:0]		–	SW2ILIM
				x	–	0	1	–	–	0	0
3C	SW3VOLT	R/W	8'b0xxx_1100	–	–	–	–	SW3[3:0]			
				0	x	x	x	–	–	–	–
3D	SW3STBY	R/W	8'b0xxx_1100	–	–	–	–	SW3STBY[3:0]			
				0	x	x	x	–	–	–	–
3E	SW3OFF	R/W	8'b0xxx_1100	–	–	–	–	SW3OFF[3:0]			
				0	x	x	x	–	–	–	–
3F	SW3MODE	R/W	8'b0011_1000	–	–	SW3 OMODE	–	SW3MODE[3:0]			
				0	0	1	1	1	0	0	0
40	SW3CONF	R/W	8'bxx10_0100	–	SW3DVS SPEED	SW3PHASE[1:0]		SW3FREQ[1:0]		–	SW3ILIM
				x	–	1	0	–	–	0	0
66	SWBSTCTL	R/W	8'b0xx0_10xx	–	SWBST1 STBYMODE[1:0]		–	SWBST1MODE[1:0] _		SWBST1VOLT[1:0]	
				0	–	–	0	–	–	–	–
69	LDOGCTL	R/W	8'b0xxx_xxx0	–	–	–	–	–	–	–	STBY_LP_B
				0	x	x	x	x	x	x	x
6A	REFOUTCTL	R/W	8'b000x_0000	–	–	–	REF OUTEN	–	–	–	–
				0	0	0	–	0	0	0	0
6B	VSNVSCTL	R/W	8'b0000_0110	–	–	–	–	–	VSNVSVOLT[2:0]		
				0	0	0	0	0	1	1	0
6C	LDO1CTL	R/W	8'b010x_1110	LDO1 OMODE	LDO1 LPWR	LDO1STBY	LDO1EN	LDO1[3:0]			
				0	0	0	–	–	–	–	–-
6D	LDO2CTL	R/W	8'b000x_1000	LDO2 OMODE	LDO2 LPWR	LDO2STBY	LDO2EN	LDO2[3:0]			
				0	0	0	–	–	–	–	–-
6E	VSDCTL	R/W	8'b000x_xx10	VSD OMODE	VSDLPWR	VSDSTBY	VSDEN	–	–	VSD[1:0]	

All information provided in this document is subject to legal disclaimers.

© 2026 NXP B.V. All rights reserved.

Table 179. Functional page...*continued*

				BITS[7:0]							
Address	Register name	R/W	Default	7	6	5	4	3	2	1	0
				0	0	0	–	x	x	–	–
6F	V33CTL	R/W	8'b000x_xx10	V33 OMODE	V33LPWR	V33STBY	V33EN	–	–	V33[1:0]	
				0	0	0	–	x	x	–	–
70	LDO3CTL	R/W	8'b010x_0000	LDO3 OMODE	LDO3 LPWR	LDO3STBY	LDO3EN	LDO3[3:0]			
				0	0	0	–	–	–	–	–
71	LDO4CTL	R/W	8'b000x_xxxx	LDO4 OMODE	LDO4 LPWR	LDO4STBY	LDO4EN	LDO4[3:0]			
				0	0	0	–	–	–	–	–
7F	Page Register	R/W	8'b0000_0000	–	–	–	PAGE[4:0]				
				0	0	0	0	0	0	0	0

Table 180. Extended page 1

Address	Register Name	TYPE	Default	BITS[7:0]							
				7	6	5	4	3	2	1	0
80	OTP FUSE READ EN	R/W	8'b000x_xxx0	–	–	–	–	–	–	–	OTP FUSE READ EN
				0	0	0	x	x	x	x	x
84	OTP LOAD MASK	R/W	8'b0000_0000	START	RL PWBRTN	FORCE PWRCTL	RL PWRCTL	RL OTP	RL OTP ECC	RL OTP FUSE	RL TRIM FUSE
				0	0	0	0	0	0	0	0
8A	OTP ECC SE1	R	8'bxxx0_0000	–	–	–	ECC5_SE	ECC4_SE	ECC3_SE	ECC2_SE	ECC1_SE
				x	x	x	0	0	0	0	0
8B	RSVD	R	8'bxxx0_0000								
8C	OTP ECC DE1	R	8'bxxx0_0000	–	–	–	ECC5_DE	ECC4_DE	ECC3_DE	ECC2_DE	ECC1_DE
				x	x	x	0	0	0	0	0
8D	RSVD	R	8'bxxx0_0000								
A0	OTP SW1 VOLT	R/W	8'b00xx_xxxx				OTP_SW1_VOLT[4:0]				
				x	x	x	x	x	x	x	x
A1	OTP SW1 SEQ								OTP_SW1_SEQ[2:0]		
A2	OTP SW1 CONFIG	R/W	8'b000x_xxXx	–	–	–	–	OTP_SW1_CONFIG[1:0]		OTP_SW1_FREQ[1:0]	
				x	x	x	x	x	x	x	x
AA	RSVD	R/W	8'b00xx_xxxx								
				x	x	x	x	x	x	x	x
AC	OTP SW2 VOLT	R/W	8'b0xxx_xxxx					OTP_SW2_HI	OTP_SW2_VOLT[2:0]		
				x	x	x	x	x	x	x	x
AD	OTP SW2 SEQ	R/W	8'b0xxx_xxxx					–	OTP_SW2_SEQ[2:0]		
				x	x	x	x	x	x	x	x
AE	OTP SW2 CONFIG	R/W	8'b0000_00xx	–	–	–	–	–	–	OTP_SW2_FREQ[1:0]	
				0	0	0	x	x	0	x	x

All information provided in this document is subject to legal disclaimers.

© 2026 NXP B.V. All rights reserved.

Table 180. Extended page 1*...continued*

Address	Register Name	TYPE	Default	BITS[7:0]							
				7	6	5	4	3	2	1	0
B0	OTP SW3 VOLT	R/W	8'b0xxx_xxxx				–	OTP_SW3_VOLT[3:0]			
				x	x	x	x	x	x	x	x
B1	OTP SW3 SEQ	R/W	8'b0xxx_xxxx					–	OTP_SW3_SEQ[2:0]		
				x	x	x	x	x	x	x	x
B2	OTP SW3 CONFIG	R/W	8'b0xxx_xxxx				–			OTP_SW3_FREQ[1:0]	
				x	x	x	x	x	x	x	x
BC	OTP SWBST VOLT	R/W	8'b0000_00xx	–	–	–	–	–	–	OTP_SWBST_VOLT[1:0]	
				0	0	0	0	0	0	0	0
BD	OTP SWBST SEQ	R/W	8'b0000_xxxx	–	–	–	–	–	OTP_SWBST_SEQ[2:0]		
				0	0	0	0	0	0	0	0
C0	OTP VSNVS VOLT	R/W	8'b0000_0xxx	–	–	–	–	–	OTP_VSNVS_VOLT[2:0]		
				0	0	0	0	0	0	0	0
C4	RSVD	R/W	8'b000x_x0xx	–	–	–	–	–	–	–	–
				0	0	0	x	x	x	x	x
C8	OTP LDO1 VOLT	R/W	8'b0000_xxxx					OTP_LDO1_VOLT[3:0]			
				0	0	0	0	x	x	x	x
C9	OTP LDO1 SEQ	R/W	8'b0000_xxxx					OTP_LDO1_SEQ[3:0]			
				0	0	0	0	x	x	x	x
CC	OTP LDO2 VOLT	R/W	8'b0000_xxxx					OTP_LDO2_VOLT[3:0]			
				0	0	0	0	x	x	x	x
CD	OTP LDO2 SEQ	R/W	8'b0000_xxxx					OTP_LDO2_SEQ[3:0]			
				0	0	0	0	x	x	x	x
D0	OTP VSD VOLT	R/W	8'b0000_xxxx					–		OTP_VSD_VOLT[2:0]	
				0	0	0	0	x	x	x	x
D1	OTP VSD SEQ	R/W	8'b0000_xxxx						OTP_VSD_SEQ[2:0]		
				0	0	0	0	0	x	x	x
D4	OTP V33 VOLT	R/W	8'b0000_xxxx							OTP_V33_VOLT[2:0]	
				0	0	0	0	x	x	x	x
D5	OTP V33 SEQ	R/W	8'b0000_xxxx						OTP_V33_SEQ[3:0]		
				0	0	0	0	x	x	x	x
D8	OTP LDO3 VOLT	R/W	8'b0000_xxxx					OTP_LDO3_VOLT[3:0]			
				0	0	0	0	x	x	x	x
D9	OTP LDO3 SEQ	R/W	8'b0000_xxxx					OTP_LDO3_SEQ[3:0]			
				0	0	0	0	x	x	x	x
DC	OTP LDO4 VOLT	R/W	8'b0000_xxxx					OTP_LDO4_VOLT[3:0]			
				0	0	0	0	x	x	x	x
DD	OTP LDO4 SEQ	R/W	8'b0000_xxxx					OTP_LDO4_SEQ[3:0]			
				0	0	0	0	x	x	x	x
E0	OTP PU CONFIG1	R/W	8'b000x_xxxx				OTP_EN_CFG		OTP_SWDVS_CLK		OTP_SEQ_CLK_SPEED
				x	x	x	x	x	x	x	x
E4	OTP FUSE POR1	R/W	8'b0000_00x0	TBB_POR	–	–	–	–	–	–	–
				0	0	0	0	0	0	x	0

All information provided in this document is subject to legal disclaimers.

© 2026 NXP B.V. All rights reserved.

Table 180. Extended page 1*...continued*

Address	Register Name	TYPE	Default	BITS[7:0]							
				7	6	5	4	3	2	1	0
E5	RSVD	R/W	8'b0000_00x0	–	–	–	–	–	–		–
				0	0	0	0	0	0		0
E6	RSVD	R/W	8'b0000_00x0	–	–	–	–	–	–		–
				0	0	0	0	0	0		0
E7	RSVD	R	8'b0000_00x0	–	–	–	–	–	–		–
				0	0	0	0	0	0		0
E8	OTP PWRGD EN	R/W/M	8'b0000_000x	–	–	–	–	–	–	–	OTP_PG_EN
				0	0	0	0	0	0	x	0
F0	RSVD	R/W	8'b000x_xxxx	–	–	–					
				0	0	0	x	x	x	x	x
F1	RSVD	R/W	8'b000x_xxxx	–	–	–					
				0	0	0	x	x	x	x	x
F7	OTP BLOWN	R/W	8'b0000_000x	–	–	–	–	–	–	–	OTP_BLOWN
				0	0	0	0	0	0	0	x
FF	OTP I2C ADDR	R/W	8'b0000_1xxx	USE_DEFAULT_ADD		–		I2C_SLV ADDR[3]	OTP_I2C_SLV ADDR[2:0]		
				0	0	0	0	1	x	x	x

Table 181. Extended page 2

Address	Register Name	TYPE	Default	BITS[7:0]							
				7	6	5	4	3	2	1	0
81	SW1 PWRSTG	R/W	8'b1111_1111	RSVD	RSVD	RSVD	RSVD	RSVD	SW1_PWRSTG[2:0]		
				1	1	1	1	1	1	1	1
83	SW1 PWRSTG	R	8'b1111_1111	RSVD	RSVD	RSVD	RSVD	RSVD	SW1_PWRSTG[2:0] RSVD		
				1	1	1	1	1	1	1	1
84	SW2 PWRSTG	R	8'b1111_1111	RSVD	RSVD	RSVD	RSVD	RSVD	SW2_PWRSTG[2:0] RSVD		
				1	1	1	1	1	1	1	1
85	SW3 PWRSTG	R	8'b1111_1111	RSVD	RSVD	RSVD	RSVD	RSVD	SW3_PWRSTG[2:0] RSVD		
				1	1	1	1	1	1	1	1
88	PWR CTRL OTP CTRL	R	8'b0000_0001	–	–	–	–	–	–	OTP_PWRGD_EN	PG_SHDWN_EN
				0	0	0	0	0	0	0	1
8D	I2C WRITE ADDRESS TRAP	R/W	8'b0000_0000	I2C_WRITE_ADDRESS_TRAP[7:0]							
				0	0	0	0	0	0	0	0
8E	I2C TRAP PAGE	R/W	8'b0000_0000	LET_IT_ROLL	RSVD	RSVD	I2C_TRAP_PAGE[4:0]				
				0	0	0	0	0	0	0	0
8F	I2C TRAP CNTR	R/W	8'b0000_0000	I2C_WRITE_ADDRESS_COUNTER[7:0]							
				0	0	0	0	0	0	0	0

All information provided in this document is subject to legal disclaimers.

© 2026 NXP B.V. All rights reserved.

Table 181. Extended page 2*...continued*

Address	Register Name	TYPE	Default	BITS[7:0]							
				7	6	5	4	3	2	1	0
90	IO DRV	R/W	8'b00xx_xxxx	SDA_DRV[1:0]		RSVD		INTB_DRV[1:0]		PORBMCU_DRV[1:0]	
				0	0	x	x	x	x	x	x
D0	OTP AUTO ECC0	R/W	8'b0000_0000	–	–	–	AUTO_ECC_BANK5	AUTO_ECC_BANK4	AUTO_ECC_BANK3	AUTO_ECC_BANK2	AUTO_ECC_BANK1
				0	0	0	0	0	0	0	0
D8	Reserved	–	8'b0000_0000	AUTO_BLOW_TIME[7:0]							
				0	0	0	0	0	0	0	0
D9	Reserved	–	8'b0000_0000	START	RELOAD	EN_RW	AUTO_FUSE_BLOW5	AUTO_FUSE_BLOW4	AUTO_FUSE_BLOW3	AUTO_FUSE_BLOW2	AUTO_FUSE_BLOW1
				0	0	0	0	0	0	0	0
E1	OTP ECC CTRL1	R/W	8'b0000_0000	RSVD	ECC1_CALC_CIN	ECC1_CIN_TBB[5:0]					
				0	0	0	0	0	0	0	0
E2	OTP ECC CTRL2	R/W	8'b0000_0000	RSVD	ECC2_CALC_CIN	ECC2_CIN_TBB[5:0]					
				0	0	0	0	0	0	0	0
E3	OTP ECC CTRL3	R/W	8'b0000_0000	RSVD	ECC3_CALC_CIN	ECC3_CIN_TBB[5:0]					
				0	0	0	0	0	0	0	0
E4	OTP ECC CTRL4	R/W	8'b0000_0000	RSVD	ECC4_CALC_CIN	ECC4_CIN_TBB[5:0]					
				0	0	0	0	0	0	0	0
E5	OTP ECC CTRL5	R/W	8'b0000_0000	RSVD	ECC5_CALC_CIN	ECC5_CIN_TBB[5:0]					
				0	0	0	0	0	0	0	0
F1	OTP FUSE CTRL1	R/W	8'b0000_0000	–	–	–	–	ANTI FUSE1_EN	ANTI FUSE1_LOAD	ANTI FUSE1_RW	BYPASS1
				0	0	0	0	0	0	0	0
F2	OTP FUSE CTRL2	R/W	8'b0000_0000	–	–	–	–	ANTI FUSE2_EN	ANTI FUSE2_LOAD	ANTI FUSE2_RW	BYPASS2
				0	0	0	0	0	0	0	0
F3	OTP FUSE CTRL3	R/W	8'b0000_0000	–	–	–	–	ANTI FUSE3_EN	ANTI FUSE3_LOAD	ANTI FUSE3_RW	BYPASS3
				0	0	0	0	0	0	0	0
F4	OTP FUSE CTRL4	R/W	8'b0000_0000	–	–	–	–	ANTI FUSE4_EN	ANTI FUSE4_LOAD	ANTI FUSE4_RW	BYPASS4
				0	0	0	0	0	0	0	0
F5	OTP FUSE CTRL5	R/W	8'b0000_0000	–	–	–	–	ANTI FUSE5_EN	ANTI FUSE5_LOAD	ANTI FUSE5_RW	BYPASS5
				0	0	0	0	0	0	0	0

All information provided in this document is subject to legal disclaimers.

© 2026 NXP B.V. All rights reserved.

9 Typical Applications

9.1 Application diagram

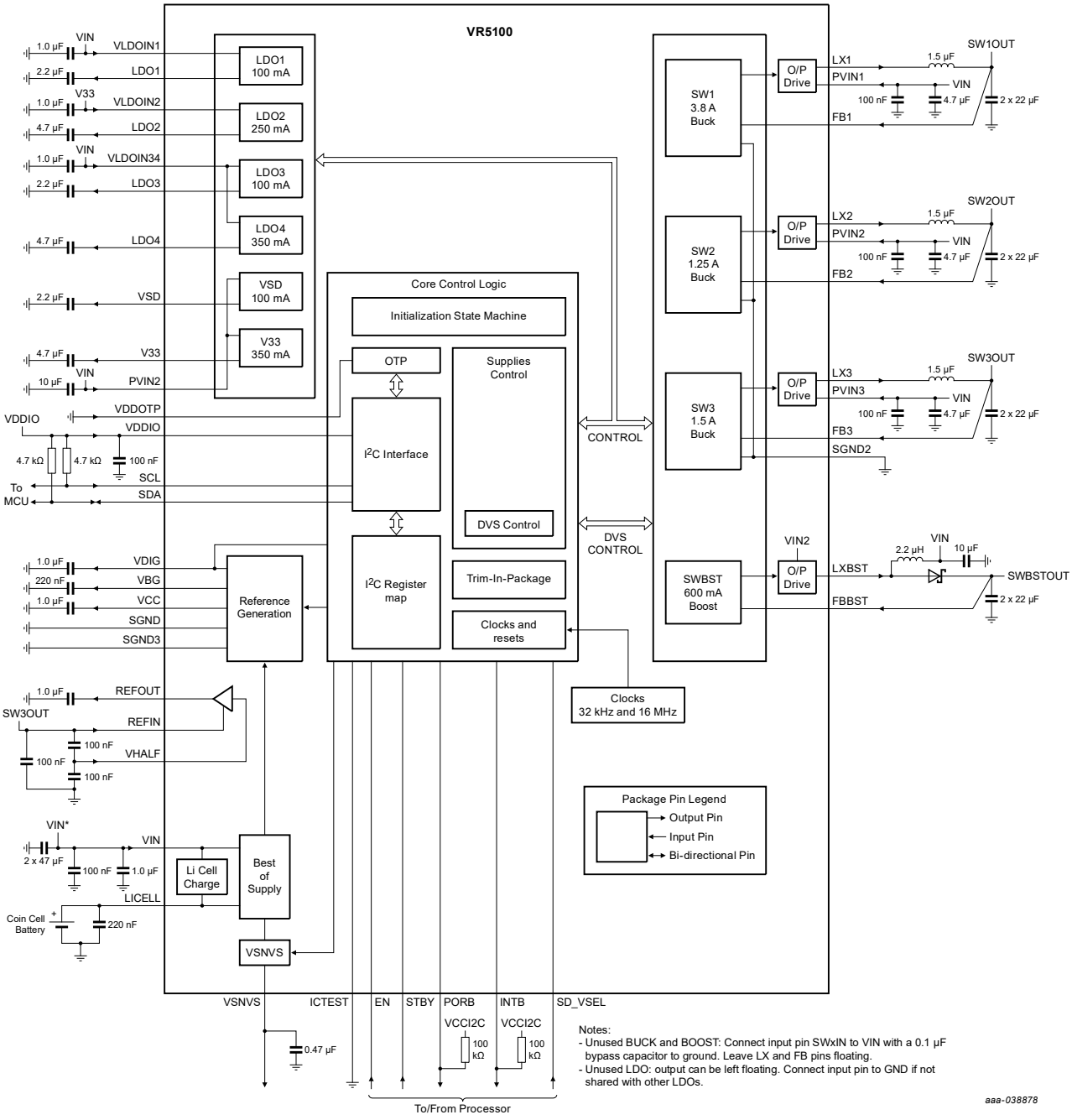

Figure 38. Typical application schematic

All information provided in this document is subject to legal disclaimers.

© 2026 NXP B.V. All rights reserved.

10 Bill of materials

The following table provides a complete list of the recommended components on a full featured system using the VR5100 device for -40 °C to 85 °C applications. Components are provided with an example part number; equivalent components may be used.

Table 182. Bill of material for -40 °C to 85 °C applications

Value	Qty	Description	Part#	Manufacturer	Component/Pin
PMIC					
N/A	1	Power management IC	VR5100	NXP	IC
Buck regulators					
1.5 µH	4	IND PWR 1.5 uH at 1.0 MHz 7.1 A 20% 2016	XAL4020-152ME	Coilcraft	SW1 inductor
		IND PWR 1.5 uH at 1.0 MHz 2.6 A 20% 2016	LPS4012-152MR	Coilcraft	SW2 and SW3 inductors
4.7 µF	4	CAP CER 4.7 µF 10 V 20% X5R 0402	GRM155R61A475MEAA	Murata	SW1, SW2, SW3 input capacitors
0.1 µF	4	CAP CER 0.1 µF 10 V 20% X5R 0201	GRM033R61A104ME84	Murata	SW1, SW2, SW3 input capacitors (optional)
22 µF	8	CAP CER 22 µF 10 V 20% X5R 0603	GRM188R61A226ME15	Murata	SW1, SW2, SW3 output capacitors
Boost regulator					
2.2 µH	1	IND PWR 2.2 µH at 1.0 MHz 2.4 A 20% 2016	DFE201610E-2R2M	TOKO INC.	SWBST inductor
		IND PWR 2.2 µH at 1.0 MHz 1.85 A 20% 1210	BRL3225T2R2M	Taiyo Yuden	Alternate for low power applications
10 µF	1	CAP CER 10 µF 10 V 20% X5R 0402	GRM155R61A106ME11	Murata	SWBST input capacitor
N/A	1	DIODE SCH PWR RECT 1.0 A 20 V SMT	MBR120LSFT3G	ON Semi	SWBST diode
22 µF	2	CAP CER 22 µF 10 V 20% X5R 0603	GRM188R61A226ME15D	Murata	SWBST output capacitors
Linear regulators					
1.0 µF	3	CAP CER 1.0 µF 10 V 20% X5R 0201	GRM033R61A105ME44	Murata	LDO1, LDO2, LDO3 and LDO4 input capacitors
2.2 µF	3	CAP CER 2.2 µF 10 V 20% X5R 0201	GRM033R61A225ME47	Murata	LDO1, LDO3, VSD output capacitors
10 µF	1	CAP CER 10 µF 10 V 20% X5R 0402	GRM155R61A106ME11	Murata	V33 and VSD input capacitor
4.7 µF	3	CAP CER 4.7 µF 10 V 20% X5R 0402	GRM155R61A475MEAA	Murata	LDO2, LDO4, V33 output capacitors
Miscellaneous					
1.0 µF	4	CAP CER 1.0 µF 10 V 20% X5R 0201	GRM033R61A105ME44	Murata	VCC, VBG, REFOUT, VIN REFOUT capacitors

All information provided in this document is subject to legal disclaimers.

© 2026 NXP B.V. All rights reserved.

Table 182. Bill of material for -40 °C to 85 °C applications*...continued*

Value	Qty	Description	Part#	Manufacturer	Component/Pin
0.22 µF	2	CAP CER 0.22 µF 10 V 20% X5R 0201	GRM033R61A224ME90	Murata	VDIG and coin cell output capacitors
0.47 µF	1	CAP CER 0.47 µF 10 V 20% X5R 0201	GRM033R61A474ME90	Murata	VSNVS output capacitor
2.2 µF	1	CAP CER 2.2 µF 10 V 20% X5R 0201	GRM033R61A225ME47	Murata	VIN input capacitor when not using Front-end LDO
0.1 µF	5	CAP CER 0.1 µF 10 V 10% X5R 0201	GRM033R61A104KE84	Murata	VCCI2C, VIN input capacitors
100 k	2	RES MF 100 k 1/16 W 1% 0402	RC0402FR-07100KL	YAGEO AMERICA	Pull-up resistors
4.7 k	2	RES MF 4.70 k 1/20 W 1% 0201	RC0201FR-074K7L	YAGEO AMERICA	I²C Pull-up resistors

The following table provides a complete list of the recommended components on a full featured system using the VR5100 Device for -40 °C to 105 °C applications. Components are provided with an example part number, equivalent components may be used.

Table 183. Bill of material for -40 °C to 105 °C applications

Value	Qty	Description	Part#	Manufacturer	Component/Pin
PMIC					
N/A	1	Power management IC	VR5100	NXP	IC
Buck regulators					
1.5 µH	4	IND PWR 1.5 µH at 1.0 MHz 2.9 A 20% 2016	DFE201610E-1R5M	TOKO INC.	SW1, SW2, SW3 inductors
		IND PWR 1.5 µH at 1.0 MHz 2.2 A 20% 1210	BRL3225T1R5M	Taiyo Yuden	Alternate for low-power applications
4.7 µF	4	CAP CER 4.7 µF 10 V 10% X7S 0603	GRM188C71A475KE11	Murata	SW1, SW2, SW3 input capacitors
0.1 µF	4	CAP CER 0.1 µF 10 V 10% X7S 0201	GRM033C71A104KE14	Murata	SW1, SW2, SW3 input capacitors (optional)
22 µF	8	CAP CER 22 µF 10 V 20% X7T 0805	GRM21BD71A226ME44	Murata	SW1, SW2, SW3 output capacitors
Boost regulator					
2.2 µH	1	IND PWR 2.2 µH at 1.0 MHz 2.4 A 20% 2016	DFE201610E-2R2M	TOKO INC.	SWBST inductor
		IND PWR 2.2 µH at 1.0 MHz 1.85 A 20% 1210	BRL3225T2R2M	Taiyo Yuden	Alternate for low-power applications
10 µF	1	CAP CER 10 µF 10 V 20% X7T 0603	GRM188D71A106MA73	Murata	SWBST input capacitor
N/A	1	DIODE SCH PWR RECT 1.0 A 20 V SMT	MBR120LSFT3G	ON Semi	SWBST diode
22 µF	2	CAP CER 22 µF 10 V 20% X5R 0603	GRM188R61A226ME15D	Murata	SWBST output capacitors
Linear regulators					

All information provided in this document is subject to legal disclaimers.

© 2026 NXP B.V. All rights reserved.

Table 183. Bill of material for -40 °C to 105 °C applications*...continued*

Value	Qty	Description	Part#	Manufacturer	Component/Pin
1.0 µF	3	CAP CER 1.0 µF 10 V 10% X7S 0402	GRM155C71A105KE11	Murata	LDO1, LDO2, LDO3 and LDO4 input capacitors
2.2 µF	3	CAP CER 2.2 µF 10 V 10% X7S 0402	GRM155C71A225KE11	Murata	LDO1, LDO3, VSD output capacitors
10 µF	1	CAP CER 10 µF 10 V 20% X7T 0603	GRM188D71A106MA73	Murata	V33 and VSD input capacitor
4.7 µF	3	CAP CER 4.7 µF 10 V 10% X7S 0603	GRM188C71A475KE11	Murata	LDO2, LDO4, V33 output capacitors
Miscellaneous					
1.0 µF	4	CAP CER 1.0 µF 10 V 10% X7R 0402	GRM155C71A105KE11	Murata	VCC, VDIG, REFOUT, VIN REFOUT capacitors
0.22 µF	2	CAP CER 0.22 µF 10 V 10% X7R 0402	GRM155R71A224KE01	Murata	VBG and coin cell output capacitors
0.47 µF	1	CAP CER 0.47 µF 10 V 20% X5R 0201	GRM155R71A474KE01	Murata	VSNVS output capacitor
2.2 µF	1	CAP CER 2.2 µF 10 V 10% X7S 0402	GRM155C71A225KE11	Murata	VIN input capacitor
0.1 µF	5	CAP CER 0.1 µF 10 V 10% X7S 0201	GRM033C71A104KE14	Murata	VCCI2C, VHALF, VIN input capacitors
100 k	2	RES MF 100 k 1/16 W 1% 0402	RC0402FR-07100KL	YAGEO AMERICA	Pull-up resistors
4.7 k	2	RES MF 4.70 K 1/20 W 1% 0201	RC0201FR-074K7L	YAGEO AMERICA	I²C pull-up resistors

All information provided in this document is subject to legal disclaimers.

© 2026 NXP B.V. All rights reserved.

11 Thermal information

11.1 Rating data

The thermal rating data of the packages has been simulated with the results listed in Table 4. Junction to Ambient Thermal Resistance Nomenclature: the JEDEC specification reserves the symbol $R_{\theta JA}$ or θJA (Theta-JA) strictly for junction-to-ambient thermal resistance on a 1s test board in natural convection environment. $R_{\theta JMA}$ or θJMA (Theta-JMA) is used for both junction-to-ambient on a 2s2p test board in natural convection and for junction-to-ambient with forced convection on both 1s and 2s2p test boards. It is anticipated the generic name, Theta-JA, continues to be commonly used. The JEDEC standards can be consulted at https://www.jedec.org.

11.2 Estimation of junction temperature

An estimation of the chip junction temperature T_J can be obtained from the equation:

$T_J = T_A + (R_{\theta JA} \times P_D)$

with:

T_A = Ambient temperature for the package in °C

$R_{\theta JA}$ = Junction to ambient thermal resistance in °C/W

P_D = Power dissipation in the package in W

The junction to ambient thermal resistance is an industry standard value providing a quick and easy estimation of thermal performance. Unfortunately, there are two values in common usage: the value determined on a single layer board $R_{\theta JA}$ and the value obtained on a four layer board $R_{\theta JMA}$. Actual application PCBs show a performance close to the simulated four layer board value, although this may be somewhat degraded in case of significant power dissipated by other components placed close to the device.

At a known board temperature, the junction temperature T_J is estimated using the following equation

$T_J = T_B + (R_{\theta JB} \times P_D)$ with

T_B = Board temperature at the package perimeter in °C

$R_{\theta JB}$ = Junction to board thermal resistance in °C/W

P_D = Power dissipation in the package in W

When the heat loss from the package case to the air can be ignored, acceptable predictions of junction temperature can be made.

All information provided in this document is subject to legal disclaimers.

© 2026 NXP B.V. All rights reserved.

12 Packaging

12.1 Packaging dimensions

Package dimensions are provided in package drawings. To find the most current package outline drawing, go to http://www.nxp.com and perform a keyword search for the drawing's document number. See Section 6.2 for specific thermal characteristics for each package.

Table 184. Package drawing information

Package	Suffix	Package outline drawing number
48 QFN 7.0 mm x 7.0 mm WF-type (wettable flank)	ES	98ASA00933D

All information provided in this document is subject to legal disclaimers.

© 2026 NXP B.V. All rights reserved.

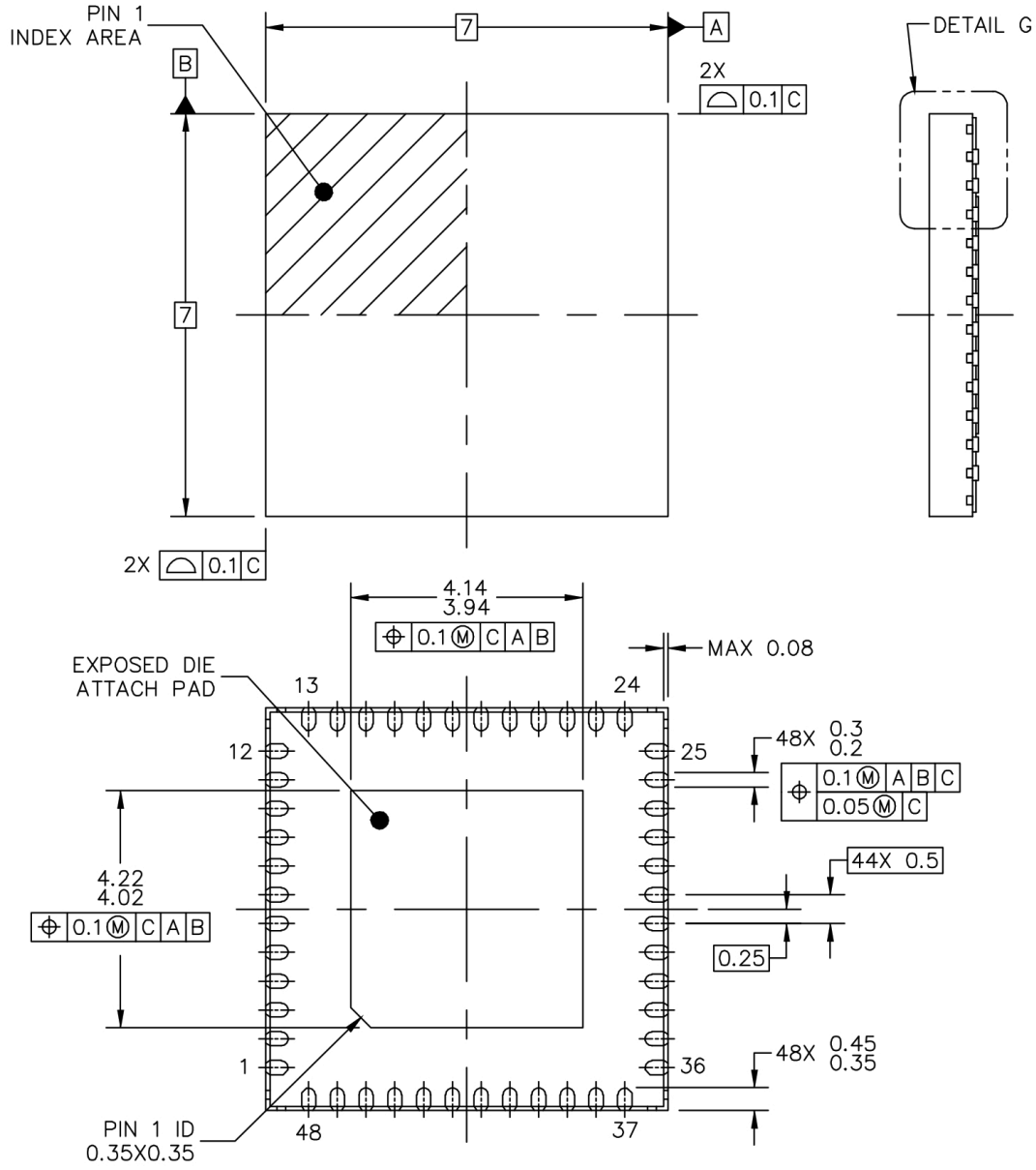

© NXP SEMICONDUCTORS N.V. ALL RIGHTS RESERVED	MECHANICAL OUTLINE	PRINT VERSION NOT TO SCALE
TITLE: QFN, THERMALLY ENHANCED, 7 X 7 X 0.85, 0.5 PITCH, 48 TERMINAL	DOCUMENT NO: 98ASA00933D	REV: B
	STANDARD: NON-JEDEC	
	SOT619-23	27 MAY 2019

Figure 39. SOT619-23 (98ASA00933D)

All information provided in this document is subject to legal disclaimers.

© 2026 NXP B.V. All rights reserved.

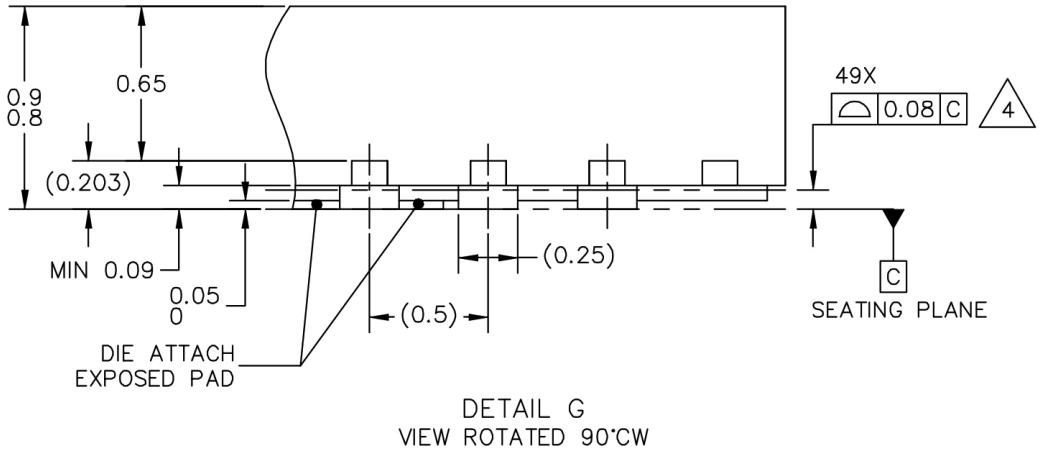

© NXP SEMICONDUCTORS N.V. ALL RIGHTS RESERVED	MECHANICAL OUTLINE	PRINT VERSION NOT TO SCALE
TITLE: QFN, THERMALLY ENHANCED, 7 X 7 X 0.85, 0.5 PITCH, 48 TERMINAL	DOCUMENT NO: 98ASA00933D	REV: B
	STANDARD: NON–JEDEC	
	SOT619–23	27 MAY 2019

Figure 40. SOT619-23 (98ASA00933D)

All information provided in this document is subject to legal disclaimers.

© 2026 NXP B.V. All rights reserved.

NOTES:

1. ALL DIMENSIONS ARE IN MILLIMETERS.
2. DIMENSIONING AND TOLERANCING PER ASME Y14.5M–1994.
3. THIS IS A NON–JEDEC REGISTERED PACKAGE.
4. COPLANARITY APPLIES TO LEADS, CORNER LEADS AND DIE ATTACH PAD.
5. MIN METAL GAP SHOULD BE 0.2 MM.

© NXP SEMICONDUCTORS N.V. ALL RIGHTS RESERVED	MECHANICAL OUTLINE	PRINT VERSION NOT TO SCALE
TITLE: QFN, THERMALLY ENHANCED, 7 X 7 X 0.85, 0.5 PITCH, 48 TERMINAL	DOCUMENT NO: 98ASA00933D	REV: B
	STANDARD: NON–JEDEC	
	SOT619–23	27 MAY 2019

Figure 41. SOT619-23 (98ASA00933D)

All information provided in this document is subject to legal disclaimers.

© 2026 NXP B.V. All rights reserved.

13 Revision history

Table 185. Revision history

Document ID	Revision date	Description
VR5100 v.7.0	27 March 2026	• Updated as per device migration 202603034DM01 • Table 1: Part numbers updated. • Figure 39, Figure 40, and Figure 41. Package updated to 98ASA00933D.
VR5100 v.6.0	10/2020	• Updated per CIN# 202010013I • Replaced Figure 38 with a more legible version (cosmetic only, no technical changes) • Changed data sheet status from Advanced Information to Technical Data • Updated all artwork to compy with corporate standards (cosmetic only, no technical changes) • Re-formatted document to conform with current corporate standards (cosmetic only, no technical changes)
VR5100 v.5.0	12/2018	• Added MC34VR5100A2EP to Table 1 • Added A2 and its values in Table 37
VR5100 v.4.0	2/2017	• Replaced Figure 1 • Removed PC34VR5100A2EP from Table 1 • Corrected Figure 4 • Removed A2 column from Table 37 • Updated Figure 28 • Corrected title for Figure 25 • Changed PC parts to MC in Table 1 • Updated Table 73 (changed default values to 1 for bits [5:0])
VR5100 v.3.0	2/2016	• VLDOIN34 max. voltage updated to 3.6 V
VR5100 v.2.0	2/2016	• Relabeled REFDDR as REFOUT • Updated form and style
VR5100 v.1.0	12/2015	• Initial release

All information provided in this document is subject to legal disclaimers.

© 2026 NXP B.V. All rights reserved.

Legal information

Data sheet status

Document status[1][2]	Product status[3]	Definition
Objective [short] data sheet	Development	This document contains data from the objective specification for product development.
Preliminary [short] data sheet	Qualification	This document contains data from the preliminary specification.
Product [short] data sheet	Production	This document contains the product specification.

[1] Please consult the most recently issued document before initiating or completing a design.
[2] The term 'short data sheet' is explained in section "Definitions".
[3] The product status of device(s) described in this document may have changed since this document was published and may differ in case of multiple devices. The latest product status information is available on the Internet at URL https://www.nxp.com.

Definitions

Draft — A draft status on a document indicates that the content is still under internal review and subject to formal approval, which may result in modifications or additions. NXP Semiconductors does not give any representations or warranties as to the accuracy or completeness of information included in a draft version of a document and shall have no liability for the consequences of use of such information.

Short data sheet — A short data sheet is an extract from a full data sheet with the same product type number(s) and title. A short data sheet is intended for quick reference only and should not be relied upon to contain detailed and full information. For detailed and full information see the relevant full data sheet, which is available on request via the local NXP Semiconductors sales office. In case of any inconsistency or conflict with the short data sheet, the full data sheet shall prevail.

Product specification — The information and data provided in a Product data sheet shall define the specification of the product as agreed between NXP Semiconductors and its customer, unless NXP Semiconductors and customer have explicitly agreed otherwise in writing. In no event however, shall an agreement be valid in which the NXP Semiconductors product is deemed to offer functions and qualities beyond those described in the Product data sheet.

Disclaimers

Limited warranty and liability — Information in this document is believed to be accurate and reliable. However, NXP Semiconductors does not give any representations or warranties, expressed or implied, as to the accuracy or completeness of such information and shall have no liability for the consequences of use of such information. NXP Semiconductors takes no responsibility for the content in this document if provided by an information source outside of NXP Semiconductors.

In no event shall NXP Semiconductors be liable for any indirect, incidental, punitive, special or consequential damages (including - without limitation - lost profits, lost savings, business interruption, costs related to the removal or replacement of any products or rework charges) whether or not such damages are based on tort (including negligence), warranty, breach of contract or any other legal theory.

Notwithstanding any damages that customer might incur for any reason whatsoever, NXP Semiconductors' aggregate and cumulative liability towards customer for the products described herein shall be limited in accordance with the Terms and conditions of commercial sale of NXP Semiconductors.

Right to make changes — NXP Semiconductors reserves the right to make changes to information published in this document, including without limitation specifications and product descriptions, at any time and without notice. This document supersedes and replaces all information supplied prior to the publication hereof.

Suitability for use — NXP Semiconductors products are not designed, authorized or warranted to be suitable for use in life support, life-critical or safety-critical systems or equipment, nor in applications where failure or malfunction of an NXP Semiconductors product can reasonably be expected to result in personal injury, death or severe property or environmental damage. NXP Semiconductors and its suppliers accept no liability for inclusion and/or use of NXP Semiconductors products in such equipment or applications and therefore such inclusion and/or use is at the customer's own risk.

Applications — Applications that are described herein for any of these products are for illustrative purposes only. NXP Semiconductors makes no representation or warranty that such applications will be suitable for the specified use without further testing or modification.

Customers are responsible for the design and operation of their applications and products using NXP Semiconductors products, and NXP Semiconductors accepts no liability for any assistance with applications or customer product design. It is customer's sole responsibility to determine whether the NXP Semiconductors product is suitable and fit for the customer's applications and products planned, as well as for the planned application and use of customer's third party customer(s). Customers should provide appropriate design and operating safeguards to minimize the risks associated with their applications and products.

NXP Semiconductors does not accept any liability related to any default, damage, costs or problem which is based on any weakness or default in the customer's applications or products, or the application or use by customer's third party customer(s). Customer is responsible for doing all necessary testing for the customer's applications and products using NXP Semiconductors products in order to avoid a default of the applications and the products or of the application or use by customer's third party customer(s). NXP does not accept any liability in this respect.

Limiting values — Stress above one or more limiting values (as defined in the Absolute Maximum Ratings System of IEC 60134) will cause permanent damage to the device. Limiting values are stress ratings only and (proper) operation of the device at these or any other conditions above those given in the Recommended operating conditions section (if present) or the Characteristics sections of this document is not warranted. Constant or repeated exposure to limiting values will permanently and irreversibly affect the quality and reliability of the device.

Terms and conditions of commercial sale — NXP Semiconductors products are sold subject to the general terms and conditions of commercial sale, as published at https://www.nxp.com/profile/terms, unless otherwise agreed in a valid written individual agreement. In case an individual agreement is concluded only the terms and conditions of the respective agreement shall apply. NXP Semiconductors hereby expressly objects to applying the customer's general terms and conditions with regard to the purchase of NXP Semiconductors products by customer.

No offer to sell or license — Nothing in this document may be interpreted or construed as an offer to sell products that is open for acceptance or the grant, conveyance or implication of any license under any copyrights, patents or other industrial or intellectual property rights.

All information provided in this document is subject to legal disclaimers.

© 2026 NXP B.V. All rights reserved.

Quick reference data — The Quick reference data is an extract of the product data given in the Limiting values and Characteristics sections of this document, and as such is not complete, exhaustive or legally binding.

Export control — This document as well as the item(s) described herein may be subject to export control regulations. Export might require a prior authorization from competent authorities.

Suitability for use in non-automotive qualified products — Unless this document expressly states that this specific NXP Semiconductors product is automotive qualified, the product is not suitable for automotive use. It is neither qualified nor tested in accordance with automotive testing or application requirements. NXP Semiconductors accepts no liability for inclusion and/or use of non-automotive qualified products in automotive equipment or applications.

In the event that customer uses the product for design-in and use in automotive applications to automotive specifications and standards, customer (a) shall use the product without NXP Semiconductors' warranty of the product for such automotive applications, use and specifications, and (b) whenever customer uses the product for automotive applications beyond NXP Semiconductors' specifications such use shall be solely at customer's own risk, and (c) customer fully indemnifies NXP Semiconductors for any liability, damages or failed product claims resulting from customer design and use of the product for automotive applications beyond NXP Semiconductors' standard warranty and NXP Semiconductors' product specifications.

HTML publications — An HTML version, if available, of this document is provided as a courtesy. Definitive information is contained in the applicable document in PDF format. If there is a discrepancy between the HTML document and the PDF document, the PDF document has priority.

Translations — A non-English (translated) version of a document, including the legal information in that document, is for reference only. The English version shall prevail in case of any discrepancy between the translated and English versions.

Security — Customer understands that all NXP products may be subject to unidentified vulnerabilities or may support established security standards or specifications with known limitations. Customer is responsible for the design and operation of its applications and products throughout their lifecycles to reduce the effect of these vulnerabilities on customer's applications and products. Customer's responsibility also extends to other open and/or proprietary technologies supported by NXP products for use in customer's applications. NXP accepts no liability for any vulnerability. Customer should regularly check security updates from NXP and follow up appropriately.

Customer shall select products with security features that best meet rules, regulations, and standards of the intended application and make the ultimate design decisions regarding its products and is solely responsible for compliance with all legal, regulatory, and security related requirements concerning its products, regardless of any information or support that may be provided by NXP.

NXP has a Product Security Incident Response Team (PSIRT) (reachable at PSIRT@nxp.com) that manages the investigation, reporting, and solution release to security vulnerabilities of NXP products.

NXP B.V. — NXP B.V. is not an operating company and it does not distribute or sell products.

Licenses

Trademarks

Notice: All referenced brands, product names, service names, and trademarks are the property of their respective owners.

NXP — wordmark and logo are trademarks of NXP B.V.

All information provided in this document is subject to legal disclaimers.

© 2026 NXP B.V. All rights reserved.

Tables

Tab. 1. Orderable part variations 3
Tab. 2. Pin definitions 5
Tab. 3. Absolute maximum voltage ratings 8
Tab. 4. Thermal ratings 8
Tab. 5. Current consumption summary 9
Tab. 6. Static electrical characteristics – SW1 10
Tab. 7. Static electrical characteristics – SW2 11
Tab. 8. Static electrical characteristics – SW3 12
Tab. 9. Static electrical characteristics - SWBST 13
Tab. 10. Static electrical characteristics - VSNVS 14
Tab. 11. Dynamic electrical characteristics - VSNVS 15
Tab. 12. Static electrical characteristics - LDO1 15
Tab. 13. Dynamic electrical characteristics - LDO1 15
Tab. 14. Static electrical characteristics - LDO2 16
Tab. 15. Dynamic electrical characteristics - LDO2 16
Tab. 16. Static electrical characteristics – VSD 17
Tab. 17. Dynamic Electrical Characteristics - VSD 17
Tab. 18. Static Electrical Characteristics – V33 18
Tab. 19. Dynamic electrical characteristics – V33 18
Tab. 20. Static electrical characteristics – LDO3 19
Tab. 21. Dynamic electrical characteristics – LDO3 19
Tab. 22. Static electrical characteristics - LDO4 20
Tab. 23. Dynamic electrical characteristics - LDO4 21
Tab. 24. Static electrical characteristics - REFOUT 21
Tab. 25. Dynamic electrical characteristics - REFOUT 21
Tab. 26. Static electrical characteristics - Coin Cell 22
Tab. 27. Static electrical characteristics - Digital I/O 22
Tab. 28. Static electrical characteristics - internal supplies 23
Tab. 29. Static electrical characteristics - UVDET threshold 23
Tab. 30. VR5100 power tree 26
Tab. 31. EN hardware debounce bit settings 27
Tab. 32. Start-up sequence 28
Tab. 33. Start-up sequence clock speed 29
Tab. 34. EN configuration 29
Tab. 35. I2C address configuration 29
Tab. 36. DVS speed selection for SWx 30
Tab. 37. Start-up configuration 30
Tab. 38. REFOUT external components 32
Tab. 39. SWx regulators external components 33
Tab. 40. Switching mode description 34
Tab. 41. Regulator mode control 34
Tab. 42. DVS speed selection for SWx 35
Tab. 43. Regulator phase clock selection 36
Tab. 44. Optimum phasing 36
Tab. 45. Regulator Frequency Configuration 37
Tab. 46. SW1 output voltage configuration 37
Tab. 47. SW1 register summary 38
Tab. 48. SW2 output voltage configuration 38
Tab. 49. SW2 register summary 39
Tab. 50. SW3 output voltage configuration 39
Tab. 51. SW3 register summary 39
Tab. 52. Register SWBSTCTL - ADDR 0x66 40
Tab. 53. SWBST external component requirements 41
Tab. 54. LDO external components 42
Tab. 55. LDO1, LDO2 output voltage configuration 43
Tab. 56. LDO3, LDO4 output voltage configuration 43
Tab. 57. V33 output voltage configuration 44
Tab. 58. VSD output voltage configuration 44
Tab. 59. LDO control 44
Tab. 60. SNVS modes of operation 45
Tab. 61. Register VSNVSCTL - ADDR 0x6B 45
Tab. 62. VSNVS external components 46
Tab. 63. Coin cell charger voltage 46
Tab. 64. Register COINCTL - ADDR 0x1A 47
Tab. 65. Coin cell charger external components 47
Tab. 66. Thermal protection thresholds 47
Tab. 67. STBY pin and polarity control 49
Tab. 68. STBY delay - initiated response 50
Tab. 69. Regulator mode control 50
Tab. 70. State machine flow summary 50
Tab. 71. Interrupt, mask, and sense bits 57
Tab. 72. Register INTSTAT0 - ADDR 0x05 58
Tab. 73. Register INTMASK0 - ADDR 0x06 58
Tab. 74. Register INTSENSE0 - ADDR 0x07 59
Tab. 75. Register INTSTAT1 - ADDR 0x08 59
Tab. 76. Register INTMASK1 - ADDR 0x09 60
Tab. 77. Register INTSENSE1 - ADDR 0x0A 60
Tab. 78. Register INTSTAT3 - ADDR 0x0E 60
Tab. 79. Register INTMASK3 - ADDR 0x0F 61
Tab. 80. Register INTSENSE3 - ADDR 0x10 61
Tab. 81. Register INTSTAT4 - ADDR 0x11 61
Tab. 82. Register INTMASK4 - ADDR 0x12 62
Tab. 83. Register INTSENSE4 - ADDR 0x13 62
Tab. 84. Register DEVICEID - ADDR 0x00 63
Tab. 85. Register SILICON REV- ADDR 0x03 63
Tab. 86. Register FABID - ADDR 0x04 63
Tab. 87. Register MEMA ADDR 0x1C 63
Tab. 88. Register MEMB ADDR 0x1D 63
Tab. 89. Register MEMC ADDR 0x1E 63
Tab. 90. Register MEMD ADDR 0x1F 64
Tab. 91. Status interrupt register 0 (INTSTAT0) 64
Tab. 92. INTSTAT0 Field descriptions 64
Tab. 93. Interrupt status mask register 0 (INTMASK0) 65
Tab. 94. INTMASK0 field descriptions 65
Tab. 95. Interrupt sense register 0 (INTSENSE0) 66
Tab. 96. INTSENSE0 field descriptions 66
Tab. 97. Status interrupt register 1 (INTSTAT1) 67
Tab. 98. INTSTAT1 field descriptions 67
Tab. 99. Interrupt status mask register 1 (INTMASK1) 67
Tab. 100. INTMASK1 field descriptions 68
Tab. 101. Interrupt sense register 1 (INTSENSE1) 68
Tab. 102. INTSENSE1 field descriptions 68
Tab. 103. Status interrupt register 3 (INTSTAT3) 69
Tab. 104. INTSTAT3 field descriptions 69
Tab. 105. Interrupt status mask register 3 (INTMASK3) 70
Tab. 106. INTMASK3 field descriptions 70

All information provided in this document is subject to legal disclaimers.

© 2026 NXP B.V. All rights reserved.

Tab. 107. Interrupt sense register 3 (INTSENSE3) 70
Tab. 108. INTSENSE3 field descriptions 71
Tab. 109. Status interrupt register 4 (INTSTAT4) 71
Tab. 110. INTSTAT4 field descriptions 71
Tab. 111. Interrupt status mask register 4 (INTMASK4) 72
Tab. 112. INTMASK4 field descriptions 72
Tab. 113. 73
Tab. 114. INTSENSE4 field descriptions 73
Tab. 115. Coin cell control register (COINCTL) 74
Tab. 116. COINCTL field descriptions 74
Tab. 117. Power control register (PWRCTL) 74
Tab. 118. PWRCTL field descriptions 74
Tab. 119. Embedded memory register A (MEMA) 75
Tab. 120. MEMA field descriptions 75
Tab. 121. Embedded memory register B (MEMB) 75
Tab. 122. MEMB field descriptions 76
Tab. 123. Embedded memory register C (MEMC) 76
Tab. 124. MEMC field descriptions 76
Tab. 125. Embedded memory register D (MEMD) 76
Tab. 126. MEMD field descriptions 76
Tab. 127. SW1 voltage control register (SW1VOLT) 76
Tab. 128. SW1VOLT field descriptions 77
Tab. 129. SW1 standby voltage control register (SW1STBY) 77
Tab. 130. SW1STBY field descriptions 77
Tab. 131. SW1 Sleep mode voltage control register (SW1OFF) 77
Tab. 132. SW1OFF field descriptions 78
Tab. 133. SW1 Switching mode selector register (SW1MODE) 78
Tab. 134. SW1MODE field descriptions 78
Tab. 135. SW1 configuration register (SW1CONF) 78
Tab. 136. SW1CONF field descriptions 79
Tab. 137. SW1 configuration register (SW1CONF) 79
Tab. 138. SW1CONF field descriptions 79
Tab. 139. SW2 voltage control register (SW2VOLT) 80
Tab. 140. SW2VOLT field descriptions 80
Tab. 141. SW2 standby voltage control register (SW2STBY) 80
Tab. 142. SW2STBY field descriptions 81
Tab. 143. SW2 Sleep mode voltage control register (SW2OFF) 81
Tab. 144. SW2OFF field descriptions 81
Tab. 145. SW2 Switching mode selector register (SW2MODE) 81
Tab. 146. SW2MODE field descriptions 82
Tab. 147. SW2 configuration register (SW2CONF) 82
Tab. 148. SW2CONF field descriptions 82
Tab. 149. SW3 voltage control register (SW3VOLT) 83
Tab. 150. SW3VOLT field descriptions 83
Tab. 151. SW3 standby voltage control register (SW3STBY) 83
Tab. 152. SW3STBY field descriptions 83
Tab. 153. SW3 Sleep mode voltage control register (SW3OFF) 84
Tab. 154. SW3OFF field descriptions 84
Tab. 155. SW3 Switching mode selector register (SW3MODE) 84
Tab. 156. SW3MODE field descriptions 84
Tab. 157. SW3 configuration register (SW3CONF) 85
Tab. 158. SW3CONF field descriptions 85
Tab. 159. SWBST configuration register (SWBSTCTL) 85
Tab. 160. SWBSTCTL Field Descriptions 85
Tab. 161. REFOUT control register (REFOUTCTL) 86
Tab. 162. REFOUT field descriptions 86
Tab. 163. VSNVS control register (VSNVSCTL) 86
Tab. 164. VSNVSCTL field descriptions 87
Tab. 165. LDO1 control register (LDO1CTL) 87
Tab. 166. LDO1CTL field descriptions 87
Tab. 167. LDO2 control register (LDO2CTL) 88
Tab. 168. LDO2CTL field descriptions 88
Tab. 169. VSD control register (VSDCTL) 89
Tab. 170. VSDCTL field descriptions 89
Tab. 171. V33 control register (V33CTL) 89
Tab. 172. V33CTL field descriptions 90
Tab. 173. LDO3 control register (LDO3CTL) 90
Tab. 174. LDO3CTL field descriptions 91
Tab. 175. LDO4 control register (LDO4CTL) 91
Tab. 176. LDO4CTL field descriptions 91
Tab. 177. Page Selection Register 92
Tab. 178. Page register field descriptions 92
Tab. 179. Functional page 93
Tab. 180. Extended page 1 96
Tab. 181. Extended page 2 98
Tab. 182. Bill of material for -40 °C to 85 °C applications 101
Tab. 183. Bill of material for -40 °C to 105 °C applications 102
Tab. 184. Package drawing information 105
Tab. 185. Revision history 109

All information provided in this document is subject to legal disclaimers.

© 2026 NXP B.V. All rights reserved.

Figures

Fig. 1. VR5100 simplified application diagram 2
Fig. 2. VR5100 simplified internal block diagram 4
Fig. 3. Pinout diagram 5
Fig. 4. Functional block diagram 25
Fig. 5. Start-up timing diagram 31
Fig. 6. REFOUT block diagram 32
Fig. 7. Generic SWx block diagram 33
Fig. 8. Voltage stepping with DVS 36
Fig. 9. SW1 diagram 37
Fig. 10. Boost regulator architecture 40
Fig. 11. General LDO block diagram 42
Fig. 12. VSNVS LDO/Switch 45
Fig. 13. State diagram 48
Fig. 14. Typical startup waveforms 52
Fig. 15. Load transient response – LDO2 52
Fig. 16. Load transient response – LDO1, LDO3 and VSD 52
Fig. 17. Load transient response – LDO4 and V33 52
Fig. 18. Load transient response – Buck regulators 53
Fig. 19. Quiescent current Buck regulators in APS mode 53
Fig. 20. Load transient response – SWBST 53
Fig. 21. Quiescent current – Buck regulators in PFM mode 53
Fig. 22. Switching frequency vs temperature 53
Fig. 23. Quiescent current – LDOs 53
Fig. 24. Load regulation – Buck regulators 54
Fig. 25. SW1 efficiency – PFM mode, 0.8 V 54
Fig. 26. Load regulation – LDOs 54
Fig. 27. SW2 efficiency – APS and PWM modes 54
Fig. 28. SW1 efficiency – APS mode 54
Fig. 29. SW2 efficiency – PFM mode 54
Fig. 30. SW3 efficiency – APS and PWM modes 55
Fig. 31. Dropout voltage – LDO1, LDO3: VSD - VOUT = 1.8 V 55
Fig. 32. SW3 efficiency – PFM mode 55
Fig. 33. Dropout voltage – LDO4: V33 - VOUT = 3.3 V 55
Fig. 34. Dropout voltage – LDO1, LDO3: VSD - VOUT = 3.3 V 55
Fig. 35. Dropout voltage: LDO4 - VOUT = 1.8 V 55
Fig. 36. Data transfer on the I2C bus 56
Fig. 37. Read operation 56
Fig. 38. Typical application schematic 100
Fig. 39. SOT619-23 (98ASA00933D) 106
Fig. 40. SOT619-23 (98ASA00933D) 107
Fig. 41. SOT619-23 (98ASA00933D) 108

All information provided in this document is subject to legal disclaimers.

© 2026 NXP B.V. All rights reserved.

Contents

1 General description 1
1.1 Features 1
2 VR5100 simplified application block diagram 2
3 Orderable parts 3
4 Internal block diagram 4
5 Pin connections 5
5.1 Pinout diagram 5
5.2 Pin definitions 5
6 General product characteristics 8
6.1 Absolute maximum ratings 8
6.2 Thermal characteristics 8
6.3 Current consumption 9
6.4 Electrical characteristics 10
7 General description 24
7.1 Features 24
7.2 Functional block diagram 25
8 Functional description and application Information 26
8.1 Introduction 26
8.2 Power generation 26
8.3 Functional description 26
8.3.1 Control logic and interface signals 26
8.3.1.1 EN 27
8.3.1.2 STBY 27
8.3.1.3 SD_VSEL 27
8.3.2 One-time-programmable memory 27
8.3.2.1 Register naming convention 28
8.3.2.2 Regulator startup sequence programming 28
8.3.2.3 EN pin configuration 29
8.3.2.4 I2C address configuration 29
8.3.2.5 Buck regulator soft start ramp rate 29
8.3.3 Start-up 30
8.3.3.1 Start-up timing diagram 31
8.3.4 16 MHz and 32 MHz clocks 31
8.3.5 Internal core voltages 32
8.3.6 REFOUT voltage reference 32
8.3.6.1 REFOUT external components 32
8.3.7 Buck regulators 33
8.3.7.1 Switching modes 33
8.3.7.2 Dynamic voltage scaling 35
8.3.7.3 Regulator phase clock 36
8.3.7.4 SW1 37
8.3.7.5 SW1 setup and control registers 37
8.3.7.6 SW2 setup and control registers 38
8.3.7.7 SW3 setup and control registers 39
8.3.8 Boost regulator 40
8.3.8.1 SWBST setup and control 40
8.3.8.2 SWBST external components 41
8.3.9 LDO regulators description 41
8.3.9.1 External components 42
8.3.9.2 Current limit protection 42
8.3.9.3 LDO voltage control 43
8.3.10 VSNVS LDO/Switch 45
8.3.10.1 VSNVS control 45
8.3.10.2 VSNVS external components 46
8.3.10.3 Coin cell battery backup 46
8.3.10.4 Coin cell charger control 46
8.3.10.5 External components 47
8.4 Power dissipation 47
8.5 Modes of operation 47
8.5.1 State diagram 47
8.5.1.1 ON mode 48
8.5.1.2 OFF mode 48
8.5.1.3 EN pin 49
8.5.1.4 Thermal protection 49
8.5.1.5 Standby mode 49
8.5.1.6 Sleep/LPSR mode 50
8.5.1.7 Coin cell mode 50
8.5.2 State machine flow summary 50
8.5.3 Performance characteristic curves 51
8.6 Control interface I2C block description 55
8.6.1 I2C device ID 56
8.6.2 I2C operation 56
8.6.3 Interrupt handling 57
8.6.4 Interrupt bit summary 57
8.6.5 Specific registers 62
8.6.5.1 IC and version identification 62
8.6.5.2 Embedded Memory 63
8.6.5.3 Register descriptions 64
8.6.6 Register map 92
8.6.6.1 Register map 93
9 Typical Applications 100
9.1 Application diagram 100
10 Bill of materials 101
11 Thermal information 104
11.1 Rating data 104
11.2 Estimation of junction temperature 104
12 Packaging 105
12.1 Packaging dimensions 105
13 Revision history 109
Legal information 110

Please be aware that important notices concerning this document and the product(s) described herein, have been included in section 'Legal information'.

© 2026 NXP B.V. **All rights reserved.**