Extract from the online catalog

VS-15-BU-DSUB-3P

Order No.: 1688214

http://eshop.phoenixcontact.de/phoenix/treeViewClick.do?UID=1688214

D-SUB contact carrier, shell size 2, accommodation for three combined contacts, contact type socket, straight, fixing with a 3 mm hole, for panel mounting frame and sleeve housing VS-15-...

Commercial data	
EAN	4017918179618
Pack	10 pcs.
Customs tariff	85366990
Weight/Piece	0.006 KG
Catalog page information	Page 322 (PC-2009)

Product notes

WEEE/RoHS-compliant since: 06/01/2006

http://www.download.phoenixcontact.com Please note that the data given here has been taken from the online catalog. For comprehensive information and data, please refer to the user documentation. The General Terms and Conditions of Use apply to Internet downloads.

Technical data

Mechanical characteristics

Number of positions	3
Insertion/withdrawal cycles	≥ 500
Type of connection	Fitting to accept combined contact
Ambient temperature (operation)	-55 °C ... 125 °C

Material data

Housing material	Steel, yellow chromated

Contact carrier material	PBTP
Contact surface material	Gold over nickel
Inflammability class acc. to UL 94	V0

Accessories

Item	Designation	Description
Contacts		
1655548	VS-ST-KX-50-RG174	Coaxial contact, for D-SUB combination inserts, solder cup, pin, straight, for cable RG 174, gold-plated
1655506	VS-ST-KX-50-RG178	Coaxial contact, for D-SUB combination inserts, solder cup, pin, straight, for cable RG -178, gold-plated
1655580	VS-ST-KX-50-RG58	Coaxial contact, for D-SUB combination inserts, solder cup, pin, straight, for cable RG 58, gold-plated
1655629	VS-ST-KX-75-RG179/187	Coaxial contact, for D-SUB combination inserts, solder cup, pin, straight, for cable RG 179/187, gold-plated
1655483	VS-ST-SC-2,6	Power contact, for D-SUB combination inserts, screw connection, pin, straight, rated current 20 A, gold-plated
General		
1688243	VS-ST-LK-3,6/22,4/2,6	Power contacts, for D-SUB combination inserts, pin, solder cup, straight, rated current 20 A, gold-plated
1688269	VS-ST-LK-3,6/22,4/4,6	Power contacts, for D-SUB combination inserts, pin, solder cup, straight, rated current 40 A, gold-plated

Drawings

Dimensioned drawing

D-SUB contact carrier

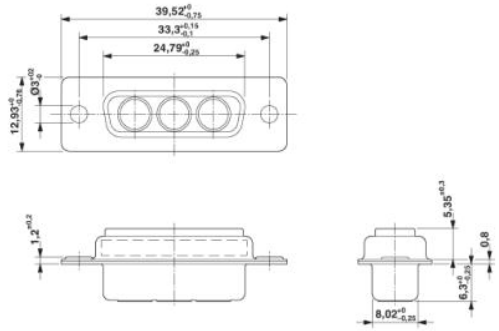

Address

PHOENIX CONTACT GmbH & Co. KG
Flachsmarktstr. 8
32825 Blomberg,Germany
Phone +49 5235 3 00
Fax +49 5235 3 41200
http://www.phoenixcontact.com

© 2009 Phoenix Contact
Technical modifications reserved;