ST-3EP1N8AAD00S - Device connector front mounting

1607673

https://www.phoenixcontact.com/pc/products/1607673

Please be informed that the data shown in this PDF document is generated from our online catalog. Please find the complete data in the user documentation. Our general terms of use for downloads are valid.



Device connector front mounting, angled rotatable, SPEEDCON, M17, number of positions: 3+PE, contact connection type: Pin, Axial O-ring, shielded: yes, flange dimensions: 21.6 mm x 21.6 mm, number of positions: 4, connection method: Crimp connection, series: ST

Commercial data

Item number	1607673
Packing unit	16 pc
Minimum order quantity	1 pc
Note	Made to order (non-returnable)
Product key	ABRBEM
GTIN	4046356273800
Weight per piece (including packing)	90.615 g
Weight per piece (excluding packing)	75.533 g
Customs tariff number	85366990
Country of origin	DE

Technical data

Notes

Order information:	Order crimp contacts Ø 2 mm separately

Safety note

Safety note	WARNING: The connectors may not be plugged in or disconnected under load. Ignoring the warning or improper use may damage persons and/or property.
	• WARNING: Commission properly functioning products only. The products must be regularly inspected for damage. Decommission defective products immediately. Replace damaged products. Repairs are not possible.
	• WARNING: Only electrically qualified personnel may install and operate the product. They must observe the following safety notes. The qualified personnel must be familiar with the basics of electrical engineering. They must be able to recognize and prevent danger. The relevant symbol on the packaging indicates that only personnel familiar with electrical engineering are allowed to install and operate the product.
	• The products are suitable for applications in plant, controller, and electrical device engineering.
	• When operating the connectors in outdoor applications, they must be separately protected against environmental influences.
	• Assembled products may not be manipulated or improperly opened.
	• Only use mating connectors that are specified in the technical data of the standards listed (e.g. the ones listed in the product accessories online at phoenixcontact.com/products).
	• When using the product in direct connection with third-party manufacturers, the user is responsible.
	• For operating voltages > 50 V AC, conductive connector housings must be grounded
	• Ensure that the protective or functional ground has been properly connected.
	• VDE 0100/1.97 § 411.1.3.2 and DIN EN 60 204/11.98 § 14.1.3 are applicable when combining several circuits in a cable and/or connector
	• Only use tools recommended by Phoenix Contact
	• The installation notes/Design In documents online on the download page at phoenixcontact.com/products must be observed for this product.
	• Operate the connector only when it is fully plugged in and interlocked.
	• Ensure that when laying the cable, the tensile load on the connectors does not exceed the upper limit specified in the standards.
	• Observe the minimum bending radius of the cable. Lay the cable without twisting it.
	• The connector warms up in normal operation. Depending on the ambient conditions, the surface of the connector can continue to warm up. In this case, the user is responsible for posting

	warnings (e.g. DIN EN ISO 13732-1:2008-12).

Mounting

Mounting type	Front mounting/square flange (4x Ø 2.7 mm)

Product properties

Product type	Circular connectors (device side)
Series	ST
Application	Power
Number of positions	4
Connection profile	3+PE
Shielded	yes
Coding	N
Thread type	M17

Dimensions

Housing

Flange dimensions	21.6 mm x 21.6 mm

Material specifications

Material Housing	GD-Zn
Material Rotating parts	CuZn
Material Insulating body	PA 6.6
Material Seal	FPM (O-ring)

Electrical properties

Contact: Contact group 1

Contact diameter	2 mm
Nominal current I_N	20 A
Nominal voltage U_N	630 V
Overvoltage category	III
Degree of pollution	3
Rated surge voltage	6 kV

Contact: Contact group 2

Contact diameter	2 mm

Connection data

Conductor connection

Connection method	Crimp connection
Contact connection type	Pin

Connector

Type	angled rotatable

Direction of rotation	Standard

Environmental and real-life conditions

Ambient conditions

Degree of protection	IP67
Ambient temperature (operation)	-40 °C ... 125 °C
Altitude	3000 m

Drawings

Dimensional drawing

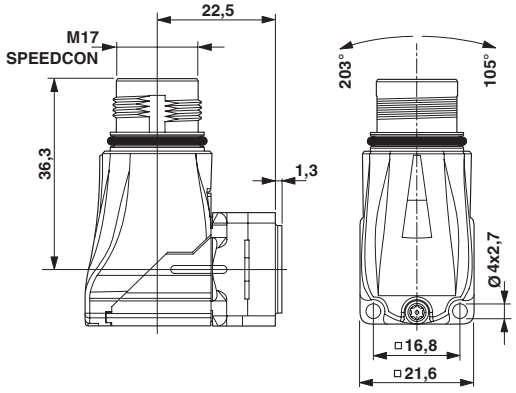

Dimensional drawing

Dimensional drawing

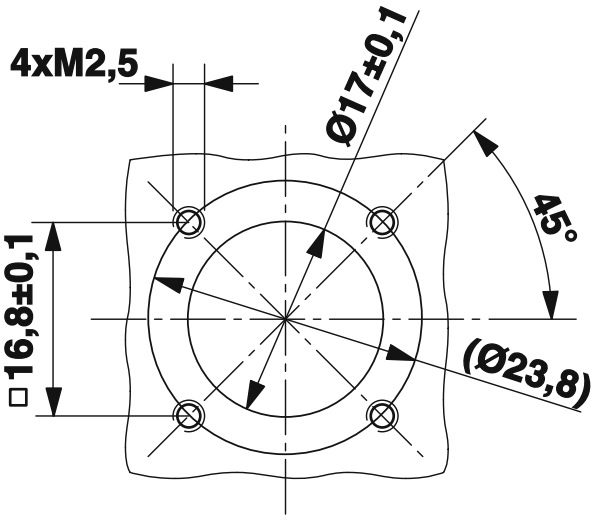

Installation dimensions

Schematic diagram

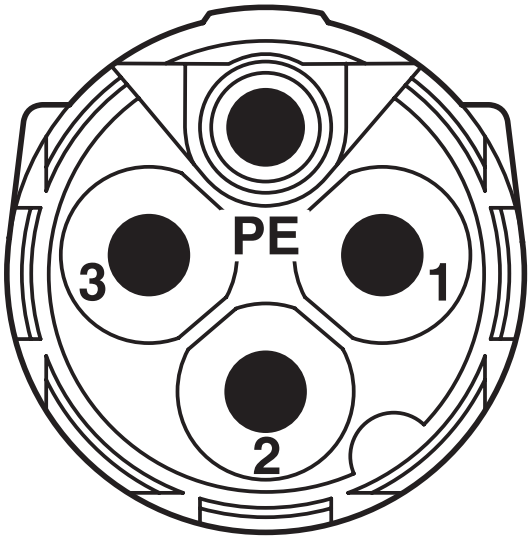

Connector pin assignment

Diagram

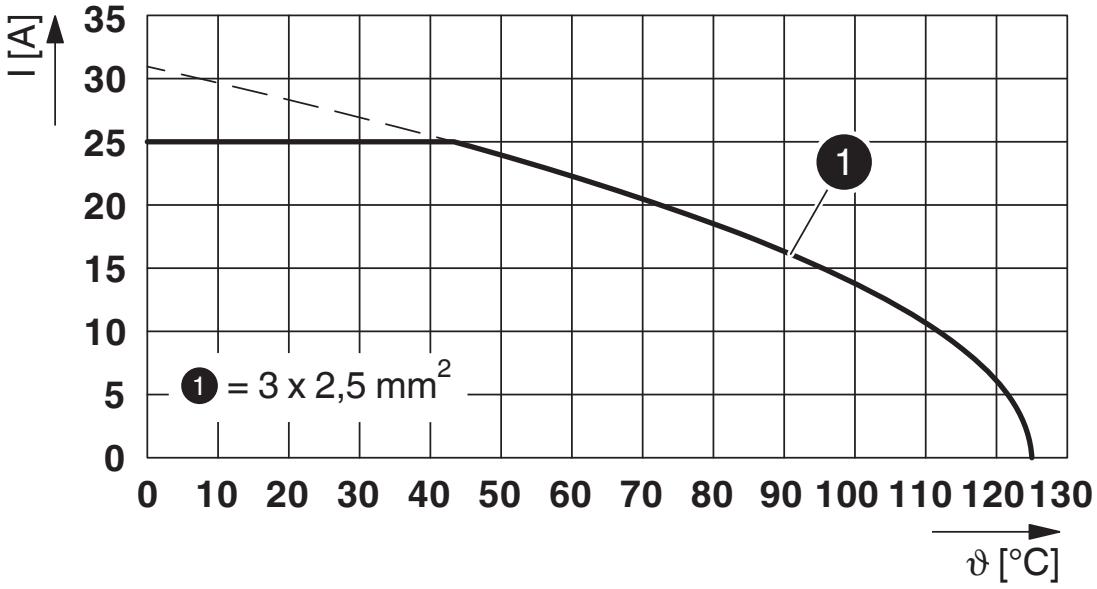

I = current strength, ϑ = ambient temperature, 3x 25 A

Approvals

To download certificates, visit the product detail page: https://www.phoenixcontact.com/pc/products/1607673

cUL Recognized
Approval ID: E335019-20111129

UL Recognized
Approval ID: E335019-20111129

UL Listed
Approval ID: E468743-20210825

	Nominal voltage U_N	Nominal current I_N	Cross section AWG	Cross section mm^2
keine				
Power	600 V	20 A	-	14

cUL Listed
Approval ID: E468743-20210825

	Nominal voltage U_N	Nominal current I_N	Cross section AWG	Cross section mm^2
keine				
Power	600 V	18 A	14	-

UL Recognized
Approval ID: E153698-20140124

cUL Recognized
Approval ID: E153698-20140124

Classifications

ECLASS

ECLASS-13.0	27440109
ECLASS-15.0	27440109

ETIM

ETIM 9.0	EC003569

UNSPSC

UNSPSC 21.0	39121400

Environmental product compliance

EU RoHS

Fulfills EU RoHS substance requirements	Yes, No exemptions

China RoHS

Environment friendly use period (EFUP)	EFUP-E
	No hazardous substances above the limits

EU REACH SVHC

REACH candidate substance (CAS No.)	No substance above 0.1 wt%

Accessories

ST-20KP010 - Crimp contact

1607655

https://www.phoenixcontact.com/pc/products/1607655



Crimp contact, Pin, turned, contact diameter: 2 mm, connection cross section: 0. 25 mm^2 ... 1 mm^2, contact material: CuZn, Alternative product in accordance with RoHS II without Exemption 6c (Pb < 0.1 %) item no.: 1242329

ST-20KP020 - Crimp contact

1607656

https://www.phoenixcontact.com/pc/products/1607656



Crimp contact, Pin, turned, contact diameter: 2 mm, connection cross section: 1 mm^2 ... 2.5 mm^2, contact material: CuZn, Alternative product in accordance with RoHS II without Exemption 6c (Pb < 0.1 %) item no.: 1242329

PROT-M17PRO-OT-IP20 - Plastic protective cap

1055708

https://www.phoenixcontact.com/pc/products/1055708



Plastic protective cap, M17, series: M17 PRO

ST-Z0019 - Color coding

1620621

https://www.phoenixcontact.com/pc/products/1620621

Color coding, color: green

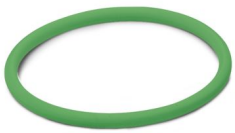

ST-Z0020 - Color coding

1620622

https://www.phoenixcontact.com/pc/products/1620622

Color coding, color: orange

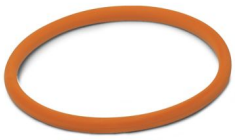

ST-Z0021 - Color coding

1620623

https://www.phoenixcontact.com/pc/products/1620623

Color coding, color: black



ST-Z0014 - Metal protective cap

1616069

https://www.phoenixcontact.com/pc/products/1616069



Metal protective cap, M17, series: ST, this item is expected to be lead-free from Q1 2027 in accordance with RoHS II without exception 6c (Pb < 0.1%), a lead-free alternative is possible on request in advance

ST-Z0013 - Metal protective cap

1616068

https://www.phoenixcontact.com/pc/products/1616068



Metal protective cap, M17, series: ST, this item is expected to be lead-free from Q1 2026 in accordance with RoHS II without exception 6c (Pb < 0.1%), a lead-free alternative is possible on request in advance

Phoenix Contact 2025 © - all rights reserved
https://www.phoenixcontact.com

PHOENIX CONTACT GmbH & Co. KG
Flachsmarktstraße 8
D-32825 Blomberg
+49 (0) 5235-3 00
info@phoenixcontact.com