D

THIS DRAWING AND DESIGN HEREON CONSTITUTES A PROPRIETARY DESIGN OF PACKARD ELECTRIC DIVISION AND IS NOT TO BE DUPLICATED OR REPRODUCED WITHOUT AUTHORITY OF PACKARD ELECTRIC DIVISION.

DO NOT SCALE

PART NO. 1205 2826

PACKARD ELECTRIC DIVISION
GENERAL MOTORS CORPORATION
WARREN, OHIO

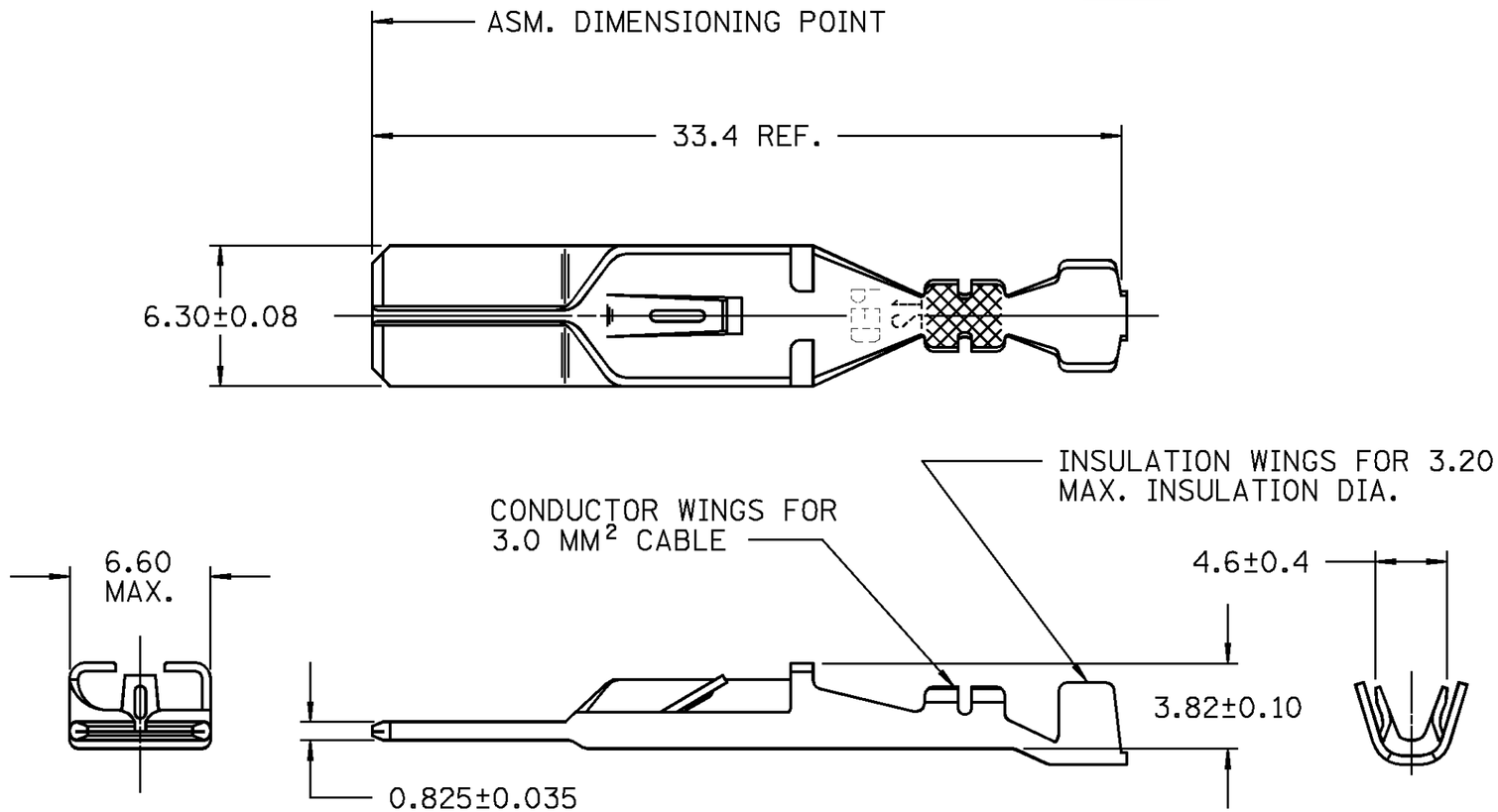

197A
4974A
76V
(2)4174A
16-S(2)
17-S

NOTE —— MATING TERMINAL 12015832 OR EQUIVALENT.

DATE	SYM	REVISION RECORD	AUTHORITY	DR	CK
20JA89	—	REDRAWN & REVISED -			
		REV. LEVEL REMAINS AT "D"	123392	TPM	FH
01NO93	E	REVISED MATERIAL SPEC	157145	TEB	TEB

PED/INTERGRAPH EMS

FILE SPEC: $$$$USER$$$$ DGN$SPECIFICATION$$$$$$$$$$$$ $$$$$SYTIME$$$$$$

THIRD ANGLE PROJECTION

METRIC
DIMENSIONS ARE IN MILLIMETERS UNLESS OTHERWISE SPECIFIED.

CODE NO. 6900

Q.C.

TOLERANCE UNLESS OTHERWISE SPECIFIED
DECIMAL: ONE PLACE ± 0.3, TWO PLACE ± 0.15
ANGULAR ±2°

DWG. DATE 07FE85 | SCALE NONE | DR. S.MARZO 07FE85

EST. NO. | CK. F.HESTON | DATE 11FE85

REFERENCE NO. 12020124 "E" SIZE | SHEET 1 | APPR. J.PENNEY | DATE 12FE85

APPR. E.TOLNAR | DATE 12FE85

MATERIAL SPEC. 0.381 THK. SAE CA 425 TIN BRASS - TIN PLATED

NAME TERM M M/P 630 SER

PART NO. 1205 2826 OUTLINE DRAWING

SIZE B

PACKARD ELECTRIC