Fast Rectifiers

RGF1A - RGF1M



SMA
CASE 403AE

Features

- Glass Passivated Junction
- For Surface Mounted Applications
- Low Forward Voltage Drop
- High Current Capability
- Easy Pick and Place
- High Surge Current Capability
- NRV Prefix for Automotive and Other Applications Requiring Unique Site and Control Change Requirements; AEC−Q101 Qualified and PPAP Capable
- These Devices are Pb−Free and are RoHS Compliant

MARKING DIAGRAM

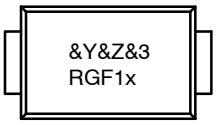

&Y	= **onsemi** Logo
&Z	= Assembly Plant Code
&3	= Date Code (Year & Week)
RGF1x	= Specific Device Code
x	= A/B/D/G/J/K/M

ORDERING INFORMATION

Part Number	Top Mark	Package	Shipping†
RGF1A	RGF1A	SMA (Pb−Free)	7500 / Tape & Reel
NRVRGF1A			
RGF1B	RGF1B	SMA (Pb−Free)	7500 / Tape & Reel
NRVRGF1B			
RGF1D	RGF1D	SMA (Pb−Free)	7500 / Tape & Reel
NRVRGF1D			
RGF1G	RGF1G	SMA (Pb−Free)	7500 / Tape & Reel
NRVRGF1G			
RGF1J	RGF1J	SMA (Pb−Free)	7500 / Tape & Reel
NRVRGF1J			
RGF1K	RGF1K	SMA (Pb−Free)	7500 / Tape & Reel
NRVRGF1K			
RGF1M	RGF1M	SMA (Pb−Free)	7500 / Tape & Reel
NRVRGF1M			

†For information on tape and reel specifications, including part orientation and tape sizes, please refer to our Tape and Reel Packaging Specifications Brochure, BRD8011/D.

© Semiconductor Components Industries, LLC, 2020

SPECIFICATIONS

ABSOLUTE MAXIMUM RATINGS (T_A = 25°C unless otherwise noted)

Symbol	Parameter	Value							Unit
		RGF1A	RGF1B	RGF1D	RGF1G	RGF1J	RGF1K	RGF1M	
V_{RRM}	Maximum Repetitive Reverse Voltage	50	100	200	400	600	800	1000	V
$I_{F(AV)}$	Average Rectified Forward Current at T_L = 125°C	1.0							A
I_{FSM}	Non−Repetitive Peak Forward Surge Current: 8.3 ms Single Half−Sine Wave	30							A
T_J	Operating Junction Temperature	−65 to +175							°C
T_{STG}	Storage Temperature Range	−65 to +175							°C

Stresses exceeding those listed in the Maximum Ratings table may damage the device. If any of these limits are exceeded, device functionality should not be assumed, damage may occur and reliability may be affected.

THERMAL CHARACTERISTICS (T_A = 25°C unless otherwise noted)

Symbol	Parameter	Value	Unit
P_D	Power Dissipation	1.76	W
$R_{\theta JA}$	Junction−to−Ambient Thermal Resistance (Note 1)	85	°C/W
$R_{\theta JL}$	Junction−to−Lead Thermal Resistance (Note 1)	28	°C/W

1. Device mounted on FR−4 PCB 0.013 mm.

ELECTRICAL CHARACTERISTICS (T_A = 25°C unless otherwise noted)

Symbol	Parameter	Conditions	Value							Unit
			RGF1A	RGF1B	RGF1D	RGF1G	RGF1J	RGF1K	RGF1M	
V_F	Maximum Forward Voltage	I_F = 1.0 A	1.3							V
t_{rr}	Maximum Reverse Recovery Time	I_F = 0.5 A, I_R = 1.0 A, I_{RR} = 0.25 A	150				250	500		ns
I_R	Maximum Reverse Current at Rated V_R	T_A = 25°C	5.0							μA
		T_A = 125°C	100							
C_T	Typical Capacitance	V_R = 4.0 V, f = 1.0 MHz	8.5							pF

Product parametric performance is indicated in the Electrical Characteristics for the listed test conditions, unless otherwise noted. Product performance may not be indicated by the Electrical Characteristics if operated under different conditions.

Share Feedback
Your Opinion Matters

TYPICAL PERFORMANCE CHARACTERISTICS

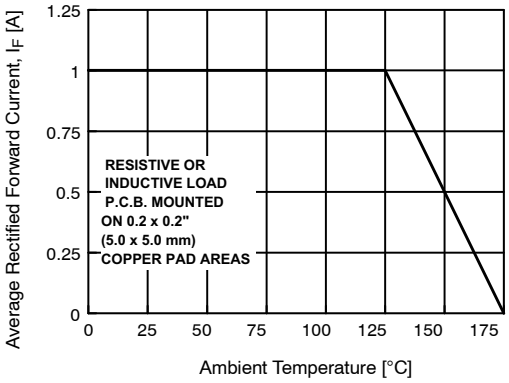

Figure 1. Forward Current Derating Curve

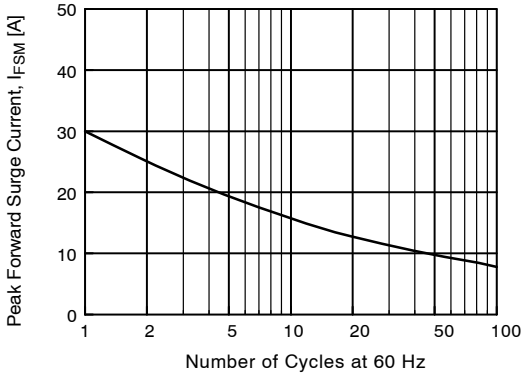

Figure 2. Non−Repetitive Surge Current

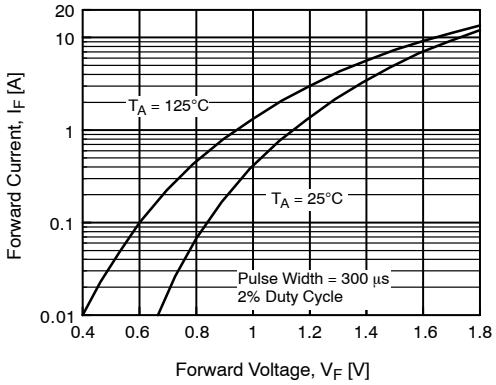

Figure 3. Forward Voltage Characteristics

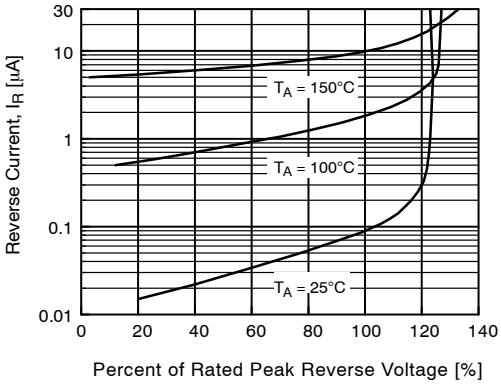

Figure 4. Reverse Current vs. Reverse Voltage

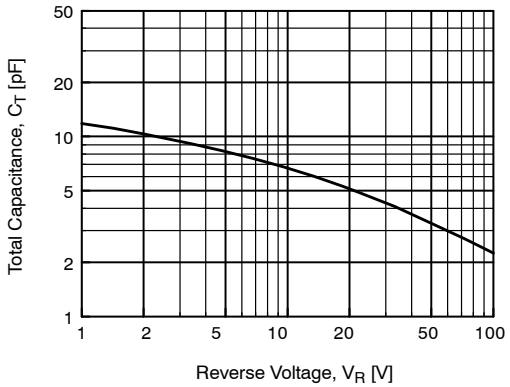

Figure 5. Total Capacitance

Share Feedback
Your Opinion Matters

SMA
CASE 403AE
ISSUE O

DATE 31 AUG 2016

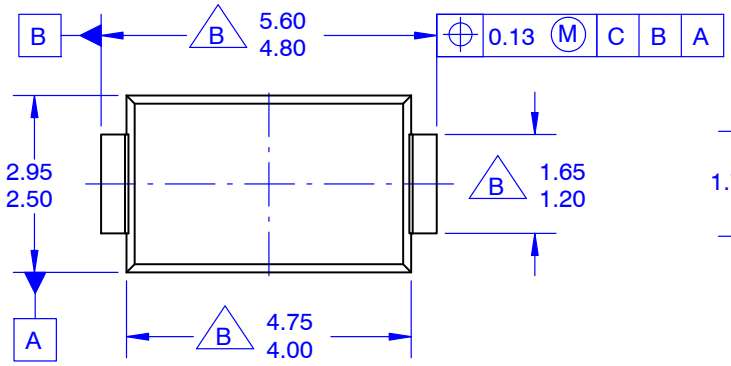

TOP VIEW

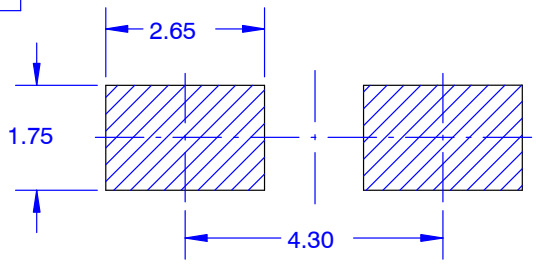

LAND PATTERN RECOMMENDATION

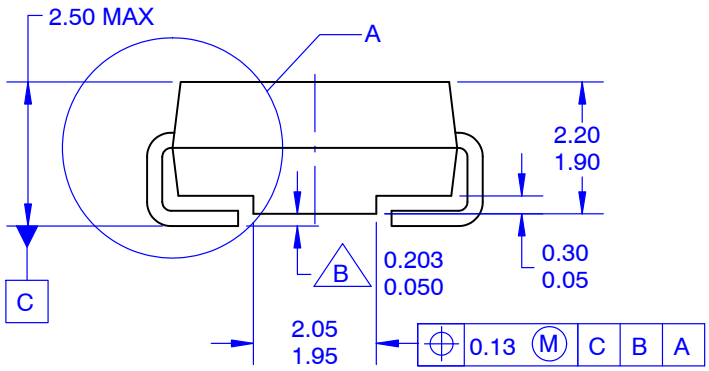

SIDE VIEW

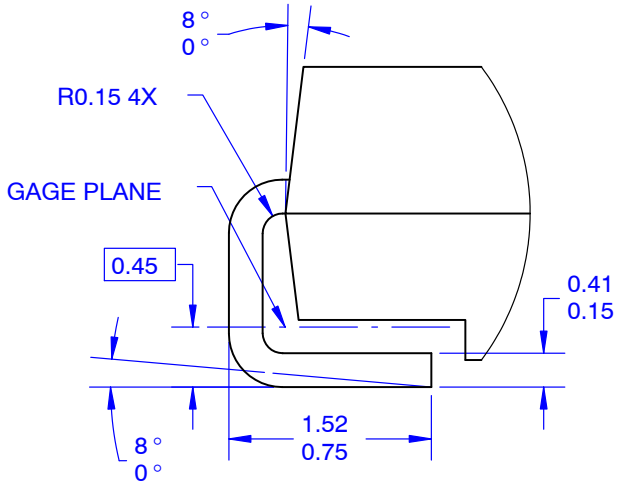

DETAIL A
SCALE 20 : 1

NOTES:

A. EXCEPT WHERE NOTED, CONFORMS TO JEDEC DO214 VARIATION AC.
B DOES NOT COMPLY JEDEC STANDARD VALUE.
C. ALL DIMENSIONS ARE IN MILLIMETERS.
D. DIMENSIONS ARE EXCLUSIVE OF BURRS, MOLD FLASH AND TIE BAR PROTRUSIONS.
E. DIMENSIONS AND TOLERANCE AS PER ASME Y14.5–2009.
E. LAND PATTERN STD. DIOM5025X231M

DOCUMENT NUMBER:	**98AON13440G**	Electronic versions are uncontrolled except when accessed directly from the Document Repository. Printed versions are uncontrolled except when stamped "CONTROLLED COPY" in red.	
DESCRIPTION:	**SMA**		**PAGE 1 OF 1**

onsemi and onsemi are trademarks of Semiconductor Components Industries, LLC dba **onsemi** or its subsidiaries in the United States and/or other countries. **onsemi** reserves the right to make changes without further notice to any products herein. **onsemi** makes no warranty, representation or guarantee regarding the suitability of its products for any particular purpose, nor does **onsemi** assume any liability arising out of the application or use of any product or circuit, and specifically disclaims any and all liability, including without limitation special, consequential or incidental damages. **onsemi** does not convey any license under its patent rights nor the rights of others.

onsemi, , and other names, marks, and brands are registered and/or common law trademarks of Semiconductor Components Industries, LLC dba "**onsemi**" or its affiliates and/or subsidiaries in the United States and/or other countries. **onsemi** owns the rights to a number of patents, trademarks, copyrights, trade secrets, and other intellectual property. A listing of **onsemi**'s product/patent coverage may be accessed at www.onsemi.com/site/pdf/Patent−Marking.pdf. **onsemi** reserves the right to make changes at any time to any products or information herein, without notice. The information herein is provided "as−is" and **onsemi** makes no warranty, representation or guarantee regarding the accuracy of the information, product features, availability, functionality, or suitability of its products for any particular purpose, nor does **onsemi** assume any liability arising out of the application or use of any product or circuit, and specifically disclaims any and all liability, including without limitation special, consequential or incidental damages. Buyer is responsible for its products and applications using **onsemi** products, including compliance with all laws, regulations and safety requirements or standards, regardless of any support or applications information provided by **onsemi**. "Typical" parameters which may be provided in **onsemi** data sheets and/or specifications can and do vary in different applications and actual performance may vary over time. All operating parameters, including "Typicals" must be validated for each customer application by customer's technical experts. **onsemi** does not convey any license under any of its intellectual property rights nor the rights of others. **onsemi** products are not designed, intended, or authorized for use as a critical component in life support systems or any FDA Class 3 medical devices or medical devices with a same or similar classification in a foreign jurisdiction or any devices intended for implantation in the human body. Should Buyer purchase or use **onsemi** products for any such unintended or unauthorized application, Buyer shall indemnify and hold **onsemi** and its officers, employees, subsidiaries, affiliates, and distributors harmless against all claims, costs, damages, and expenses, and reasonable attorney fees arising out of, directly or indirectly, any claim of personal injury or death associated with such unintended or unauthorized use, even if such claim alleges that **onsemi** was negligent regarding the design or manufacture of the part. **onsemi** is an Equal Opportunity/Affirmative Action Employer. This literature is subject to all applicable copyright laws and is not for resale in any manner.

ADDITIONAL INFORMATION

TECHNICAL PUBLICATIONS:
Technical Library: www.onsemi.com/design/resources/technical−documentation
onsemi Website: www.onsemi.com

ONLINE SUPPORT: www.onsemi.com/support
For additional information, please contact your local Sales Representative at www.onsemi.com/support/sales