3-STATE Octal D-Type Flip-Flop

MM74HC374

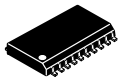

SOIC−20 WB
CASE 751D−05

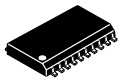

SOIC−20, 300 mils
CASE 751BJ−01

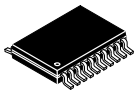

TSSOP−20 WB
CASE 948E

General Description

The MM74HC374 high speed Octal D−Type Flip−Flops utilize advanced silicon−gate CMOS technology. They possess the high noise immunity and low power consumption of standard CMOS integrated circuits, as well as the ability to drive 15 LS−TTL loads. Due to the large output drive capability and the 3−STATE feature, these devices are ideally suited for interfacing with bus lines in a bus organized system.

These devices are positive edge triggered flip−flops. Data at the D inputs, meeting the setup and hold time requirements, are transferred to the Q outputs on positive going transitions of the CLOCK (CK) input. When a high logic level is applied to the OUTPUT CONTROL (OC) input, all outputs go to a high impedance state, regardless of what signals are present at the other inputs and the state of the storage elements.

The 74HC logic family is speed, function, and pinout compatible with the standard 74LS logic family. All inputs are protected from damage due to static discharge by internal diode clamps to VCC and ground.

Features

- Typical Propagation Delay: 20 ns
- Wide Operating Voltage Range: 2−6 V
- Low Input Current: 1 μA Maximum
- Low Quiescent Current: 160 μA Maximum
- Compatible with Bus−oriented Systems
- Output Drive Capability: 15 LS−TTL Loads
- This is a Pb−Free Device

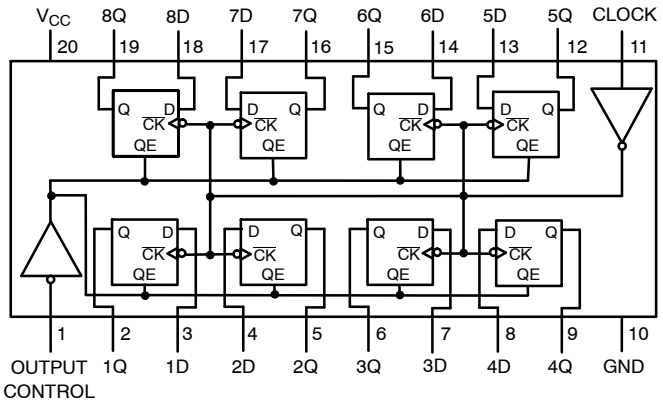

Pin Assignments for SOIC and TSSOP (Top View)

Figure 1. Connection Diagram

MARKING DIAGRAMS

SOIC−20

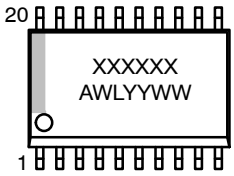

TSSOP−20

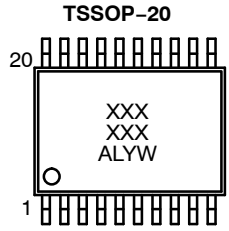

XXXXXX	=	Specific Device Code
A	=	Assembly Location
WL, L	=	Wafer Lot Number
Y	=	Year
WW, YW	=	Work Week

ORDERING INFORMATION

See detailed ordering and shipping information on page 5 of this data sheet.

© Semiconductor Components Industries, LLC, 1983

TRUTH TABLE

Output Control	Clock	Data	Output
L	↑	H	H
L	↑	L	L
L	L	X	Q_0
H	X	X	Z

NOTES:
H = HIGH Level
L = LOW Level
X = Don't Care
↑ = Transition from LOW−to−HIGH
Z = High Impedance State
Q_0 = The level of the output before steady state input conditions were established.

ABSOLUTE MAXIMUM RATINGS (Note 1)

Symbol	Rating		Value	Unit
V_{CC}	Supply Voltage		−0.5 to +6.5 V	V
V_{IN}	DC Input Voltage		−0.5 to V_{CC} +0.5 V	V
V_{OUT}	DC Output Voltage		−0.5 to V_{CC} +0.5 V	V
I_{IK}, I_{OK}	Clamp Diode Current		±20	mA
I_{OUT}	DC Output Current, per pin		±35	mA
I_{CC}	DC V_{CC} or GND Current, per pin		±70	mA
T_{STG}	Storage Temperature Range		−65 to +150	°C
P_D	Power Dissipation	SOIC	1302	mW
		TSSOP	833	mW
T_L	Lead Temperature (Soldering 10 seconds)		260	°C

Stresses exceeding those listed in the Maximum Ratings table may damage the device. If any of these limits are exceeded, device functionality should not be assumed, damage may occur and reliability may be affected.
1. Unless otherwise specified all voltages are referenced to ground.

RECOMMENDED OPERATING CONDITIONS

Symbol	Parameter		Min	Max	Unit
V_{CC}	Supply Voltage		2	6	V
V_{IN}, V_{OUT}	DC Input or Output Voltage		0	V_{CC}	V
T_A	Operating Temperature Range		−55	+125	°C
t_r, t_f	Input Rise or Fall Times	V_{CC} = 2.0 V	−	1000	ns
		V_{CC} = 4.5 V	−	500	ns
		V_{CC} = 6.0 V	−	400	ns

Functional operation above the stresses listed in the Recommended Operating Ranges is not implied. Extended exposure to stresses beyond the Recommended Operating Ranges limits may affect device reliability.

Share Feedback
Your Opinion Matters

DC ELECTRICAL CHARACTERISTICS (Note 2)

Symbol	Parameter	Conditions	V_{CC}	T_A = 25°C	T_A = −40 to 85°C	T_A = −55 to 125°C	Unit
				Typ	Guaranteed Limits		
V_{IH}	Minimum HIGH Level Input Voltage		2.0 V 4.5 V 6.0 V		1.5 3.15 4.2	1.5 3.15 4.2	1.5 3.15 4.2	V V V
V_{IL}	Maximum LOW Level Input Voltage		2.0 V 4.5 V 6.0 V		0.5 1.35 1.8	0.5 1.35 1.8	0.5 1.35 1.8	V V V
V_{OH}	Minimum HIGH Level Output Voltage	$V_{IN} = V_{IH}$ or V_{IL} $\|I_{OUT}\| \le 20$ μA	2.0 V 4.5 V 6.0 V	2.0 4.5 6.0	1.9 4.4 5.9	1.9 4.4 5.9	1.9 4.4 5.9	V V V
		$V_{IN} = V_{IH}$ or V_{IL} $\|I_{OUT}\| \le 6.0$ mA $\|I_{OUT}\| \le 7.8$ mA	4.5 V 6.0 V	4.2 5.7	3.98 5.48	3.84 5.34	3.7 5.2	V V
V_{OL}	Maximum LOW Level Output Voltage	$V_{IN} = V_{IH}$ or V_{IL} $\|I_{OUT}\| \le 20$ μA	2.0 V 4.5 V 6.0 V	0 0 0	0.1 0.1 0.1	0.1 0.1 0.1	0.1 0.1 0.1	V V V
		$V_{IN} = V_{IH}$ or V_{IL} $\|I_{OUT}\| \le 6.0$ mA $\|I_{OUT}\| \le 7.8$ mA	4.5 V 6.0 V	0.2 0.2	0.26 0.26	0.33 0.33	0.4 0.4	V V
I_{IN}	Maximum Input Current	$V_{IN} = V_{CC}$ or GND	6.0 V		±0.1	±1.0	±1.0	μA
I_{OZ}	Maximum 3−STATE Output Leakage Current	$V_{IN} = V_{IH}$, OC = V_{IH} $V_{OUT} = V_{CC}$ or GND	6.0 V		±0.5	±5	±10	μA
I_{CC}	Maximum Quiescent Supply Current	$V_{IN} = V_{CC}$ or GND I_{OUT} = 0 μA	6.0 V		8.0	80	160	μA

Product parametric performance is indicated in the Electrical Characteristics for the listed test conditions, unless otherwise noted. Product performance may not be indicated by the Electrical Characteristics if operated under different conditions.

2. For a power supply of 5 V ±10% the worst case output voltages (V_{OH}, and V_{OL}) occur for HC at 4.5 V. Thus the 4.5 V values should be used when designing with this supply. Worst case V_{IH} and V_{IL} occur at V_{CC} = 5.5 V and 4.5 V respectively. (The V_{IH} value at 5.5 V is 3.85 V.) The worst case leakage current (I_{IN}, I_{CC}, and I_{OZ}) occur for CMOS at the higher voltage and so the 6.0 V values should be used.

AC ELECTRICAL CHARACTERISTICS

(V_{CC} = 5 V, T_A = 25°C, $t_r = t_f$ = 6 ns)

Symbol	Parameter	Conditions	Typ	Guaranteed Limit	Unit
f_{MAX}	Maximum Operating Frequency		50	35	MHz
t_{PHL}, t_{PLH}	Maximum Propagation Delay Clock to Q	C_L = 45 pF	20	32	ns
t_{PZH}, t_{PZL}	Maximum Output Enable Time	R_L = 1 kΩ, C_L = 45 pF	19	28	ns
t_{PHZ}, t_{PLZ}	Maximum Output Disable Time	R_L = 1 kΩ, C_L = 5 pF	17	25	ns
t_s	Minimum Setup Time		–	20	ns
t_H	Minimum Hold Time		–	5	ns
t_W	Minimum Pulse Width		9	16	ns

Product parametric performance is indicated in the Electrical Characteristics for the listed test conditions, unless otherwise noted. Product performance may not be indicated by the Electrical Characteristics if operated under different conditions.

Share Feedback
Your Opinion Matters

AC ELECTRICAL CHARACTERISTICS

(VCC = 2.0–6.0 V, C_L = 50 pF, $t_r = t_f$ = 6 ns, unless otherwise specified)

Symbol	Parameter	Conditions	V_{CC}	T_A = 25°C	T_A = −40 to 85°C	T_A = −55 to 125°C	Unit
				Typ	Guaranteed Limits		
f_{MAX}	Maximum Operating Frequency	C_L = 50 pF	2.0 V 4.5 V 6.0 V		6 30 35	5 24 28	4 20 23	MHz MHz MHz
t_{PHL}, t_{PLH}	Maximum Propagation Delay, Clock to Q	C_L = 50 pF C_L = 150 pF	2.0 V 2.0 V	68 110	180 230	225 288	270 345	ns ns
		C_L = 50 pF C_L = 150 pF	4.5 V 4.5 V	22 30	36 46	45 57	48 69	ns ns
		C_L = 50 pF C_L = 150 pF	6.0 V 6.0 V	20 28	31 40	39 50	46 60	ns ns
t_{PZH}, t_{PZL}	Maximum Output Enable Time	R_L = 1 kΩ C_L = 50 pF C_L = 150 pF	 2.0 V 2.0 V	 50 80	 150 200	 189 250	 225 300	ns ns
		C_L = 50 pF C_L = 150 pF	4.5 V 4.5 V	21 30	30 40	37 50	45 60	ns ns
		C_L = 50 pF C_L = 150 pF	6.0 V 6.0 V	19 26	26 35	31 44	39 53	ns ns
t_{PHZ}, t_{PLZ}	Maximum Output Disable Time	R_L = 1 kΩ C_L = 50 pF	2.0 V 4.5 V 6.0 V	50 21 19	150 30 26	189 37 31	225 45 39	ns ns ns
t_s	Minimum Setup Time		2.0 V 4.5 V 6.0 V		50 9 9	60 13 11	75 15 13	ns ns ns
t_H	Minimum Hold Time		2.0 V 4.5 V 6.0 V		5 5 5	30 5 5	5 5 5	ns ns ns
t_W	Minimum Pulse Width		2.0 V 4.5 V 6.0 V	30 9 8	80 16 14	100 20 18	120 24 20	ns ns ns
t_{THL}, t_{TLH}	Maximum Output Rise and Fall Time	C_L = 50 pF	2.0 V 4.5 V 6.0 V	25 7 6	60 12 10	75 15 13	90 18 15	ns ns ns
t_r, t_f	Maximum Input Rise and Fall Time, Clock		2.0 V 4.5 V 6.0 V		1000 500 400	1000 500 400	1000 500 400	ns ns ns
C_{PD}	Power Dissipation Capacitance (Note 3)	(per flip−flop) OC = V_{CC} OC = GND		 30 50				 pF pF
C_{IN}	Maximum Input Capacitance			5	10	10	10	pF

Product parametric performance is indicated in the Electrical Characteristics for the listed test conditions, unless otherwise noted. Product performance may not be indicated by the Electrical Characteristics if operated under different conditions.

3. C_{PD} determines the no load dynamic power consumption, $P_D = C_{PD} V_{CC}^2 f + I_{CC} V_{CC}$, and the no load dynamic current consumption, $I_S = C_{PD} V_{CC} f + I_{CC}$.

Share Feedback
Your Opinion Matters

ORDERING INFORMATION

Device	Marking	Package	Shipping†
MM74HC374WM	HC374A	SOIC−20 WB (Pb−Free and Halide Free)	38 Units / Tube
MM74HC374WMX	HC374A	SOIC−20, 300 mils (Pb−Free and Halide Free)	1000 / Tape & Reel
MM74HC374MTCX	HC 374A	TSSOP−20 WB (Pb−Free)	2500 / Tape & Reel

†For information on tape and reel specifications, including part orientation and tape sizes, please refer to our Tape and Reel Packaging Specifications Brochure, BRD8011/D.

Share Feedback
Your Opinion Matters

SOIC−20, 300 mils
CASE 751BJ
ISSUE O

DATE 19 DEC 2008

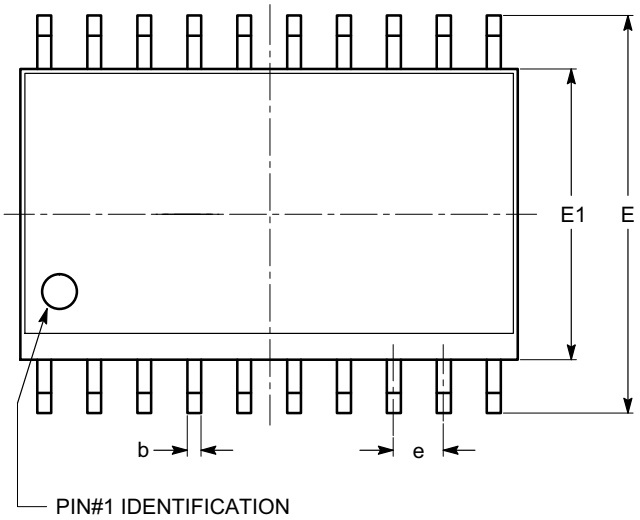

TOP VIEW

SYMBOL	MIN	NOM	MAX
A	2.36	2.49	2.64
A1	0.10		0.30
A2	2.05		2.55
b	0.31	0.41	0.51
c	0.20	0.27	0.33
D	12.60	12.80	13.00
E	10.01	10.30	10.64
E1	7.40	7.50	7.60
e		1.27 BSC	
h	0.25		0.75
L	0.40	0.81	1.27
θ	0°		8°
θ1	5°		15°

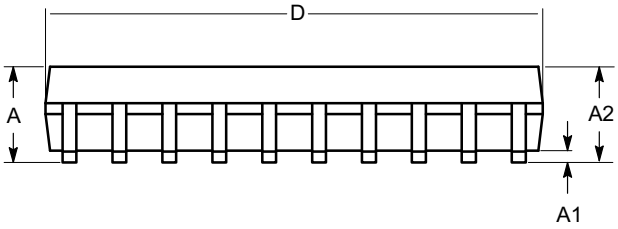

SIDE VIEW

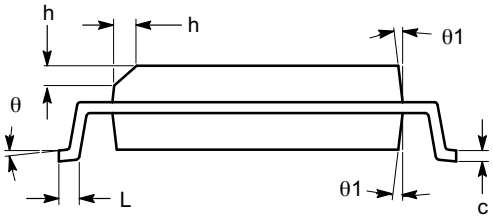

END VIEW

Notes:
(1) All dimensions are in millimeters. Angles in degrees.
(2) Complies with JEDEC MS-013.

DOCUMENT NUMBER:	98AON34287E	Electronic versions are uncontrolled except when accessed directly from the Document Repository. Printed versions are uncontrolled except when stamped "CONTROLLED COPY" in red.
DESCRIPTION:	SOIC−20, 300 MILS	PAGE 1 OF 1

onsemi and onsemi are trademarks of Semiconductor Components Industries, LLC dba **onsemi** or its subsidiaries in the United States and/or other countries. **onsemi** reserves the right to make changes without further notice to any products herein. **onsemi** makes no warranty, representation or guarantee regarding the suitability of its products for any particular purpose, nor does **onsemi** assume any liability arising out of the application or use of any product or circuit, and specifically disclaims any and all liability, including without limitation special, consequential or incidental damages. **onsemi** does not convey any license under its patent rights nor the rights of others.

SOIC−20 WB
CASE 751D−05
ISSUE H

DATE 22 APR 2015

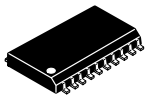

SCALE 1:1

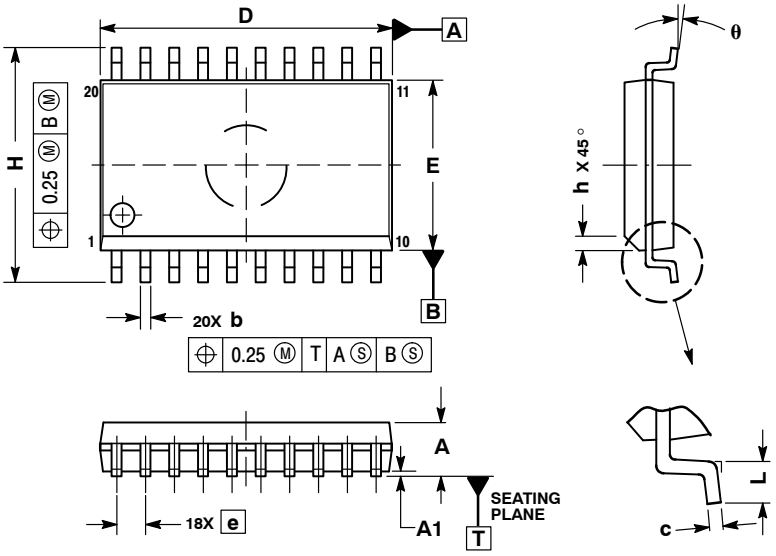

NOTES:
1. DIMENSIONS ARE IN MILLIMETERS.
2. INTERPRET DIMENSIONS AND TOLERANCES PER ASME Y14.5M, 1994.
3. DIMENSIONS D AND E DO NOT INCLUDE MOLD PROTRUSION.
4. MAXIMUM MOLD PROTRUSION 0.15 PER SIDE.
5. DIMENSION B DOES NOT INCLUDE DAMBAR PROTRUSION. ALLOWABLE PROTRUSION SHALL BE 0.13 TOTAL IN EXCESS OF B DIMENSION AT MAXIMUM MATERIAL CONDITION.

	MILLIMETERS	
DIM	MIN	MAX
A	2.35	2.65
A1	0.10	0.25
b	0.35	0.49
c	0.23	0.32
D	12.65	12.95
E	7.40	7.60
e	1.27 BSC	
H	10.05	10.55
h	0.25	0.75
L	0.50	0.90
θ	0°	7°

RECOMMENDED SOLDERING FOOTPRINT*

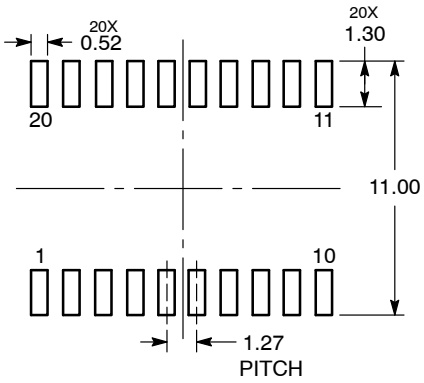

DIMENSIONS: MILLIMETERS

*For additional information on our Pb−Free strategy and soldering details, please download the **onsemi** Soldering and Mounting Techniques Reference Manual, SOLDERRM/D.

GENERIC MARKING DIAGRAM*

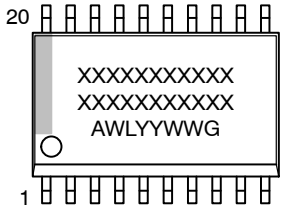

XXXXX = Specific Device Code
A = Assembly Location
WL = Wafer Lot
YY = Year
WW = Work Week
G = Pb−Free Package

*This information is generic. Please refer to device data sheet for actual part marking. Pb−Free indicator, “G” or microdot “▪”, may or may not be present. Some products may not follow the Generic Marking.

DOCUMENT NUMBER:	**98ASB42343B**	Electronic versions are uncontrolled except when accessed directly from the Document Repository. Printed versions are uncontrolled except when stamped “CONTROLLED COPY” in red.	
DESCRIPTION:	**SOIC−20 WB**		**PAGE 1 OF 1**

onsemi and onsemi are trademarks of Semiconductor Components Industries, LLC dba **onsemi** or its subsidiaries in the United States and/or other countries. **onsemi** reserves the right to make changes without further notice to any products herein. **onsemi** makes no warranty, representation or guarantee regarding the suitability of its products for any particular purpose, nor does **onsemi** assume any liability arising out of the application or use of any product or circuit, and specifically disclaims any and all liability, including without limitation special, consequential or incidental damages. **onsemi** does not convey any license under its patent rights nor the rights of others.

onsemi, , and other names, marks, and brands are registered and/or common law trademarks of Semiconductor Components Industries, LLC dba "**onsemi**" or its affiliates and/or subsidiaries in the United States and/or other countries. **onsemi** owns the rights to a number of patents, trademarks, copyrights, trade secrets, and other intellectual property. A listing of **onsemi**'s product/patent coverage may be accessed at www.onsemi.com/site/pdf/Patent−Marking.pdf. **onsemi** reserves the right to make changes at any time to any products or information herein, without notice. The information herein is provided "as−is" and **onsemi** makes no warranty, representation or guarantee regarding the accuracy of the information, product features, availability, functionality, or suitability of its products for any particular purpose, nor does **onsemi** assume any liability arising out of the application or use of any product or circuit, and specifically disclaims any and all liability, including without limitation special, consequential or incidental damages. Buyer is responsible for its products and applications using **onsemi** products, including compliance with all laws, regulations and safety requirements or standards, regardless of any support or applications information provided by **onsemi**. "Typical" parameters which may be provided in **onsemi** data sheets and/or specifications can and do vary in different applications and actual performance may vary over time. All operating parameters, including "Typicals" must be validated for each customer application by customer's technical experts. **onsemi** does not convey any license under any of its intellectual property rights nor the rights of others. **onsemi** products are not designed, intended, or authorized for use as a critical component in life support systems or any FDA Class 3 medical devices or medical devices with a same or similar classification in a foreign jurisdiction or any devices intended for implantation in the human body. Should Buyer purchase or use **onsemi** products for any such unintended or unauthorized application, Buyer shall indemnify and hold **onsemi** and its officers, employees, subsidiaries, affiliates, and distributors harmless against all claims, costs, damages, and expenses, and reasonable attorney fees arising out of, directly or indirectly, any claim of personal injury or death associated with such unintended or unauthorized use, even if such claim alleges that **onsemi** was negligent regarding the design or manufacture of the part. **onsemi** is an Equal Opportunity/Affirmative Action Employer. This literature is subject to all applicable copyright laws and is not for resale in any manner.

ADDITIONAL INFORMATION

TECHNICAL PUBLICATIONS:
Technical Library: www.onsemi.com/design/resources/technical−documentation
onsemi Website: www.onsemi.com

ONLINE SUPPORT: www.onsemi.com/support
For additional information, please contact your local Sales Representative at www.onsemi.com/support/sales