3.3 V/5 V ECL Quad D Flip-Flop with Set, Reset, and Differential Clock

MC10EP131, MC100EP131



LQFP−32
FA SUFFIX
CASE 561AB

Description

The MC10/100EP131 is a Quad Master−slaved D flip−flop with common set and separate resets. The device is an expansion of the E131 with differential common clock and individual clock enables. With AC performance faster than the E131 device, the EP131 is ideal for applications requiring the fastest AC performance available.

Each flip−flop may be clocked separately by holding Common Clock (C_C) LOW and $\overline{C_C}$ HIGH, then using the differential Clock Enable inputs for clocking (C_{0-3}, $\overline{C_{0-3}}$).

Common clocking is achieved by holding the differential inputs C_{0-3} LOW and $\overline{C_{0-3}}$ HIGH while using the differential Common Clock (C_C) to clock all four flip−flops. When left floating open, any differential input will disable operation due to input pulldown resistors forcing an output default state.

Individual asynchronous resets (R_{0-3}) and an asynchronous set (SET) are provided.

Data enters the master when both C_C and C_{0-3} are LOW, and transfers to the slave when either C_C or C_{0-3} (or both) go HIGH.

The 100 Series contains temperature compensation.

Features

- 460 ps Typical Propagation Delay
- Maximum Frequency > 3 GHz Typical
- Differential Individual and Common Clocks
- Individual Asynchronous Resets
- Asynchronous Set
- PECL Mode Operating Range: V_{CC} = 3.0 V to 5.5 V with V_{EE} = 0 V
- NECL Mode Operating Range: V_{CC} = 0 V with V_{EE} = −3.0 V to −5.5 V
- Open Input Default State
- Safety Clamp on Inputs
- Q Output Will Default LOW with Inputs Open or at V_{EE}
- Pb−Free Packages are Available

MARKING DIAGRAM*

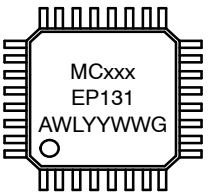

xxx	= 10 or 100
A	= Assembly Location
WL	= Wafer Lot
YY	= Year
WW	= Work Week
G	= Pb−Free Package

(Note: Microdot may be in either location)

*For additional marking information, refer to Application Note AND8002/D.

ORDERING INFORMATION

Device	Package	Shipping†
MC10EP131FAG	LQFP−32 (Pb−Free)	250 Units / Tray
MC100EP131FAG	LQFP−32 (Pb−Free)	250 Units / Tray
MC100EP131FAR2G	LQFP−32 (Pb−Free)	2000 / Tape & Reel

†For information on tape and reel specifications, including part orientation and tape sizes, please refer to our Tape and Reel Packaging Specifications Brochure, BRD8011/D.

© Semiconductor Components Industries, LLC, 2006

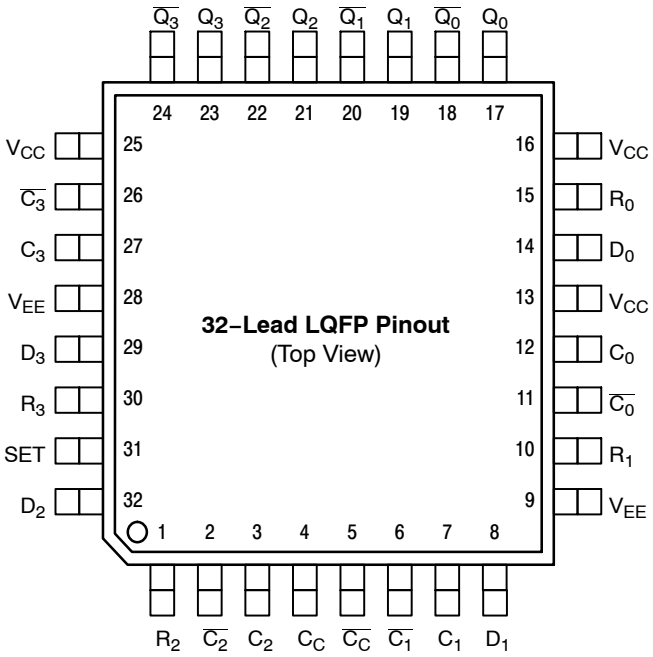

Warning: All V_{CC} and V_{EE} pins must be externally connected to Power Supply to guarantee proper operation.

Figure 1. 32−Lead LQFP Pinout (Top View)

Table 1. PIN DESCRIPTION

PIN	FUNCTION
D_{0-3}*	ECL Data Inputs
C_{0-3}*, $\overline{C_{0-3}}$*	ECL Separate Clock Inputs
C_C*, $\overline{C_C}$*	ECL Common Clock Inputs
R_{0-3}*	ECL Asynchronous Reset
SET*	ECL Asynchronous Set
Q_{0-3}, $\overline{Q_{0-3}}$	ECL Data Outputs
V_{CC}	Positive Supply
V_{EE}	Negative Supply

* Pins will default LOW when left open.

Table 2. TRUTH TABLE

D	S*	R*	CLK	Q
L	L	L	Z	L
H	L	L	Z	H
X	H	L	X	H
X	L	H	X	L
X	H	**H**	X	Undef

Z = LOW to HIGH Transition

* Pins will default low when left open.

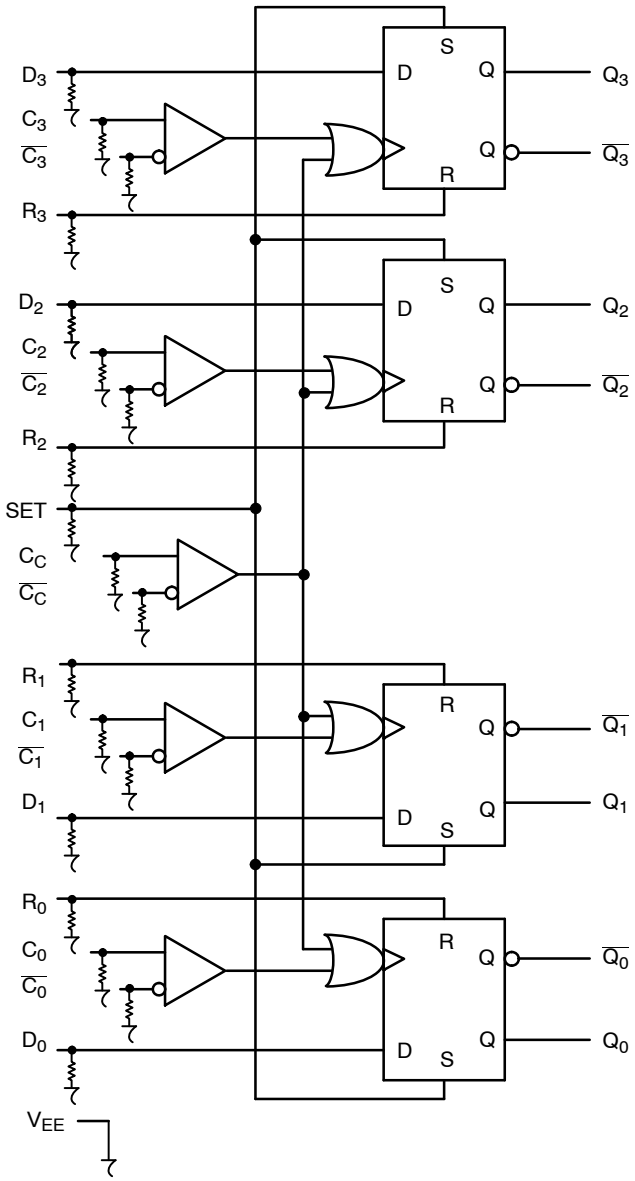

Figure 2. Logic Diagram

Share Feedback
Your Opinion Matters

Table 3. ATTRIBUTES

Characteristics	Value
Internal Input Pulldown Resistor	75 kΩ
Internal Input Pullup Resistor	N/A
ESD Protection Human Body Model Machine Model Charged Device Model	 > 2 kV > 100 V > 2 kV
Moisture Sensitivity, Indefinite Time Out of Drypack (Note 1)	Pb−Free Pkg
LQFP−32	Level 2
Flammability Rating Oxygen Index: 28 to 34	 UL 94 V−0 @ 0.125 in
Transistor Count	935 Devices
Meets or exceeds JEDEC Spec EIA/JESD78 IC Latchup Test	

1. For additional information, see Application Note AND8003/D.

Table 4. MAXIMUM RATINGS

Symbol	Parameter	Condition 1	Condition 2	Rating	Unit
V_{CC}	PECL Mode Power Supply	V_{EE} = 0 V		6	V
V_{EE}	NECL Mode Power Supply	V_{CC} = 0 V		−6	V
V_I	PECL Mode Input Voltage NECL Mode Input Voltage	V_{EE} = 0 V V_{CC} = 0 V	$V_I \le V_{CC}$ $V_I \ge V_{EE}$	6 −6	V V
I_{out}	Output Current	Continuous Surge		50 100	mA mA
I_{BB}	V_{BB} Sink/Source			±0.5	mA
T_A	Operating Temperature Range			−40 to +85	°C
T_{stg}	Storage Temperature Range			−65 to +150	°C
θ_{JA}	Thermal Resistance (Junction−to−Ambient)	0 lfpm 500 lfpm	32 LQFP 32 LQFP	80 55	°C/W °C/W
θ_{JC}	Thermal Resistance (Junction−to−Case)	Standard Board	32 LQFP	12 to 17	°C/W
T_{sol}	Wave Solder (Pb−Free)			265	°C

Stresses exceeding those listed in the Maximum Ratings table may damage the device. If any of these limits are exceeded, device functionality should not be assumed, damage may occur and reliability may be affected.

Share Feedback
Your Opinion Matters

Table 5. 10EP DC CHARACTERISTICS, PECL V_{CC} = 3.3 V, V_{EE} = 0 V (Note 2)

Symbol	Characteristic	−40°C			25°C			85°C			Unit
		Min	Typ	Max	Min	Typ	Max	Min	Typ	Max	
I_{EE}	Power Supply Current	70	95	120	70	95	120	70	95	120	mA
V_{OH}	Output HIGH Voltage (Note 3)	2165	2290	2415	2230	2355	2480	2290	2415	2540	mV
V_{OL}	Output LOW Voltage (Note 3)	1365	1490	1615	1430	1555	1680	1490	1615	1740	mV
V_{IH}	Input HIGH Voltage (Single−Ended)	2090		2415	2155		2480	2215		2540	mV
V_{IL}	Input LOW Voltage (Single−Ended)	1365		1690	1460		1755	1490		1815	mV
V_{IHCMR}	Input HIGH Voltage Common Mode Range (Differential Configuration) (Note 4)	2.0		3.3	2.0		3.3	2.0		3.3	V
I_{IH}	Input HIGH Current			150			150			150	μA
I_{IL}	Input LOW Current	0.5			0.5			0.5			μA

NOTE: Device will meet the specifications after thermal equilibrium has been established when mounted in a test socket or printed circuit board with maintained transverse airflow greater than 500 lfpm.

2. Input and output parameters vary 1:1 with V_{CC}. V_{EE} can vary +0.3 V to −2.2 V.
3. All loading with 50 Ω to V_{CC} − 2.0 V.
4. V_{IHCMR} min varies 1:1 with V_{EE}, V_{IHCMR} max varies 1:1 with V_{CC}. The V_{IHCMR} range is referenced to the most positive side of the differential input signal.

Table 6. 10EP DC CHARACTERISTICS, PECL V_{CC} = 5.0 V, V_{EE} = 0 V (Note 5)

Symbol	Characteristic	−40°C			25°C			85°C			Unit
		Min	Typ	Max	Min	Typ	Max	Min	Typ	Max	
I_{EE}	Power Supply Current	70	95	120	70	95	120	70	95	120	mA
V_{OH}	Output HIGH Voltage (Note 6)	3865	3990	4115	3930	4055	4180	3990	4115	4240	mV
V_{OL}	Output LOW Voltage (Note 6)	3065	3190	3315	3130	3255	3380	3190	3315	3440	mV
V_{IH}	Input HIGH Voltage (Single−Ended)	3790		4115	3855		4180	3915		4240	mV
V_{IL}	Input LOW Voltage (Single−Ended)	3065		3390	3130		3455	3190		3515	mV
V_{IHCMR}	Input HIGH Voltage Common Mode Range (Differential Configuration) (Note 7)	2.0		5.0	2.0		5.0	2.0		5.0	V
I_{IH}	Input HIGH Current			150			150			150	μA
I_{IL}	Input LOW Current	0.5			0.5			0.5			μA

NOTE: Device will meet the specifications after thermal equilibrium has been established when mounted in a test socket or printed circuit board with maintained transverse airflow greater than 500 lfpm.

5. Input and output parameters vary 1:1 with V_{CC}. V_{EE} can vary +2.0 V to −0.5 V.
6. All loading with 50 Ω to V_{CC} − 2.0 V.
7. V_{IHCMR} min varies 1:1 with V_{EE}, V_{IHCMR} max varies 1:1 with V_{CC}. The V_{IHCMR} range is referenced to the most positive side of the differential input signal.

Share Feedback
Your Opinion Matters

Table 7. 10EP DC CHARACTERISTICS, NECL V_{CC} = 0 V, V_{EE} = −5.5 V to −3.0 V (Note 8)

Symbol	Characteristic	−40°C			25°C			85°C			Unit
		Min	Typ	Max	Min	Typ	Max	Min	Typ	Max	
I_{EE}	Power Supply Current	70	95	120	70	95	120	70	95	120	mA
VOH	Output HIGH Voltage (Note 9)	−1135	−1010	−885	−1070	−945	−820	−1010	−885	−760	mV
V_{OL}	Output LOW Voltage (Note 9)	−1935	−1810	−1685	−1870	−1745	−1620	−1810	−1685	−1560	mV
V_{IH}	Input HIGH Voltage (Single−Ended)	−1210		−885	−1145		−820	−1085		−760	mV
V_{IL}	Input LOW Voltage (Single−Ended)	−1935		−1610	−1870		−1545	−1810		−1485	mV
V_{IHCMR}	Input HIGH Voltage Common Mode Range (Differential Configuration) (Note 10)	V_{EE}+2.0		0.0	V_{EE}+2.0		0.0	V_{EE}+2.0		0.0	V
I_{IH}	Input HIGH Current			150			150			150	μA
I_{IL}	Input LOW Current	0.5			0.5			0.5			μA

NOTE: Device will meet the specifications after thermal equilibrium has been established when mounted in a test socket or printed circuit board with maintained transverse airflow greater than 500 lfpm.

8. Input and output parameters vary 1:1 with V_{CC}.
9. All loading with 50 Ω to V_{CC} − 2.0 V.
10. V_{IHCMR} min varies 1:1 with V_{EE}, V_{IHCMR} max varies 1:1 with V_{CC}. The V_{IHCMR} range is referenced to the most positive side of the differential input signal.

Table 8. 100EP DC CHARACTERISTICS, PECL V_{CC} = 3.3 V, V_{EE} = 0 V (Note 11)

Symbol	Characteristic	−40°C			25°C			85°C			Unit
		Min	Typ	Max	Min	Typ	Max	Min	Typ	Max	
I_{EE}	Power Supply Current	70	95	120	75	97	120	80	105	130	mA
V_{OH}	Output HIGH Voltage (Note 12)	2155	2280	2405	2155	2280	2405	2155	2280	2405	mV
V_{OL}	Output LOW Voltage (Note 12)	1355	1480	1605	1355	1480	1605	1355	1480	1605	mV
V_{IH}	Input HIGH Voltage (Single−Ended)	2075		2420	2075		2420	2075		2420	mV
V_{IL}	Input LOW Voltage (Single−Ended)	1355		1675	1355		1675	1355		1675	mV
V_{IHCMR}	Input HIGH Voltage Common Mode Range (Differential Configuration) (Note 13)	2.0		3.3	2.0		3.3	2.0		3.3	V
I_{IH}	Input HIGH Current			150			150			150	μA
I_{IL}	Input LOW Current	0.5			0.5			0.5			μA

NOTE: Device will meet the specifications after thermal equilibrium has been established when mounted in a test socket or printed circuit board with maintained transverse airflow greater than 500 lfpm.

11. Input and output parameters vary 1:1 with V_{CC}. V_{EE} can vary +0.3 V to −2.2 V.
12. All loading with 50 Ω to V_{CC} − 2.0 V.
13. V_{IHCMR} min varies 1:1 with V_{EE}, V_{IHCMR} max varies 1:1 with V_{CC}. The V_{IHCMR} range is referenced to the most positive side of the differential input signal.

Share Feedback
Your Opinion Matters

Table 9. 100EP DC CHARACTERISTICS, PECL V_{CC} = 5.0 V, V_{EE} = 0 V (Note 14)

Symbol	Characteristic	−40°C			25°C			85°C			Unit
		Min	Typ	Max	Min	Typ	Max	Min	Typ	Max	
I_{EE}	Power Supply Current	70	95	120	75	97	120	80	105	130	mA
V_{OH}	Output HIGH Voltage (Note 15)	3855	3980	4105	3855	3980	4105	3855	3980	4105	mV
V_{OL}	Output LOW Voltage (Note 15)	3055	3180	3305	3055	3180	3305	3055	3180	3305	mV
V_{IH}	Input HIGH Voltage (Single−Ended)	3775		4120	3775		4120	3775		4120	mV
V_{IL}	Input LOW Voltage (Single−Ended)	3055		3375	3055		3375	3055		3375	mV
V_{IHCMR}	Input HIGH Voltage Common Mode Range (Differential Configuration) (Note 16)	2.0		5.0	2.0		5.0	2.0		5.0	V
I_{IH}	Input HIGH Current			150			150			150	μA
I_{IL}	Input LOW Current	0.5			0.5			0.5			μA

NOTE: Device will meet the specifications after thermal equilibrium has been established when mounted in a test socket or printed circuit board with maintained transverse airflow greater than 500 lfpm.

14. Input and output parameters vary 1:1 with V_{CC}. V_{EE} can vary +2.0 V to −0.5 V.
15. All loading with 50 Ω to V_{CC} − 2.0 V.
16. V_{IHCMR} min varies 1:1 with V_{EE}, V_{IHCMR} max varies 1:1 with V_{CC}. The V_{IHCMR} range is referenced to the most positive side of the differential input signal.

Table 10. 100EP DC CHARACTERISTICS, NECL V_{CC} = 0 V, V_{EE} = −5.5 V to −3.0 V (Note 17)

Symbol	Characteristic	−40°C			25°C			85°C			Unit
		Min	Typ	Max	Min	Typ	Max	Min	Typ	Max	
I_{EE}	Power Supply Current	70	95	120	75	97	120	80	105	130	mA
V_{OH}	Output HIGH Voltage (Note 18)	−1145	−1020	−895	−1145	−1020	−895	−1145	−1020	−895	mV
V_{OL}	Output LOW Voltage (Note 18)	−1945	−1820	−1695	−1945	−1820	−1695	−1945	−1820	−1695	mV
V_{IH}	Input HIGH Voltage (Single−Ended)	−1225		−880	−1225		−880	−1225		−880	mV
V_{IL}	Input LOW Voltage (Single−Ended)	−1945		−1625	−1945		−1625	−1945		−1625	mV
V_{IHCMR}	Input HIGH Voltage Common Mode Range (Differential Configuration) (Note 19)	V_{EE}+2.0		0.0	V_{EE}+2.0		0.0	V_{EE}+2.0		0.0	V
I_{IH}	Input HIGH Current			150			150			150	μA
I_{IL}	Input LOW Current	0.5			0.5			0.5			μA

NOTE: Device will meet the specifications after thermal equilibrium has been established when mounted in a test socket or printed circuit board with maintained transverse airflow greater than 500 lfpm.

17. Input and output parameters vary 1:1 with V_{CC}.
18. All loading with 50 Ω to V_{CC} − 2.0 V.
19. V_{IHCMR} min varies 1:1 with V_{EE}, V_{IHCMR} max varies 1:1 with V_{CC}. The V_{IHCMR} range is referenced to the most positive side of the differential input signal.

Share Feedback
Your Opinion Matters

Table 11. AC CHARACTERISTICS V_{CC} = 0 V; V_{EE} = −3.0 V to −5.5 V or V_{CC} = 3.0 V to 5.5 V; V_{EE} = 0 V (Note 20)

Symbol	Characteristic	−40°C			25°C			85°C			Unit
		Min	Typ	Max	Min	Typ	Max	Min	Typ	Max	
f_{max}	Maximum Frequency (See Figure 3. Frequency vs. V_{OUTpp} and JITTER)		> 3			> 3			> 3		GHz
t_{PLH}, t_{PHL}	Propagation Delay to Output Differential C_{0-3} C_C R_{0-3} SET	320 320 320 300	450 450 430 430	520 520 520 550	380 400 380 380	460 500 480 460	580 600 580 580	450 450 450 400	560 560 560 530	650 650 700 650	ps
t_{RR}	Set/R0−3 Recovery	290	210		290	210		350	280		ps
t_S t_H	Setup Time Hold Time	120	80		120	80		120	80		ps
t_{PW}	Minimum Pulse Rate SET, R_{0-3}	550	400		550	400		550	400		
t_{JITTER}	Cycle−to−Cycle Jitter (See Figure 3. Frequency vs. V_{OUTpp} and JITTER)		0.2	< 1		0.2	< 1		0.2	< 1	ps
t_r t_f	Output Rise/Fall Times Q, $\overline{Q}$ (20% − 80%)	110	180	250	125	200	275	150	230	300	ps

NOTE: Device will meet the specifications after thermal equilibrium has been established when mounted in a test socket or printed circuit board with maintained transverse airflow greater than 500 lfpm.

20. Measured using a 750 mV source, 50% duty cycle clock source. All loading with 50 Ω to V_{CC} − 2.0 V.

Share Feedback
Your Opinion Matters

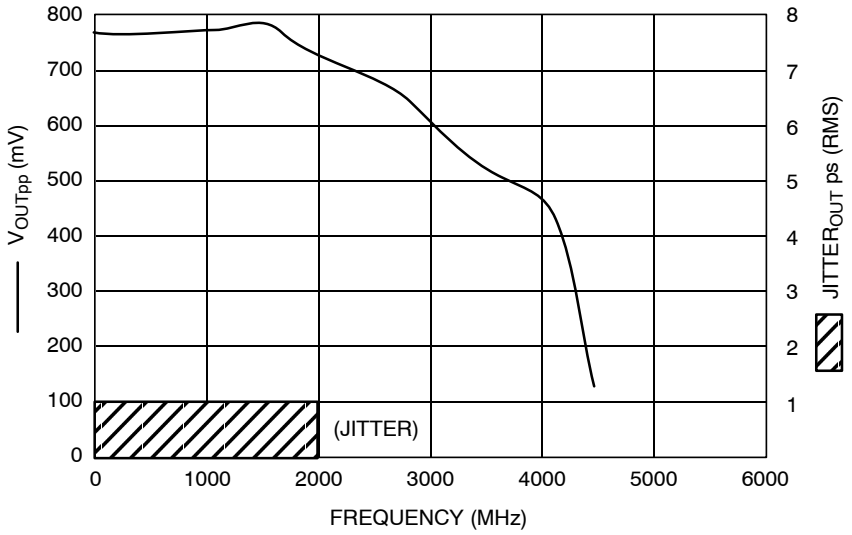

Figure 3. Frequency vs. V_{OUTpp} and JITTER

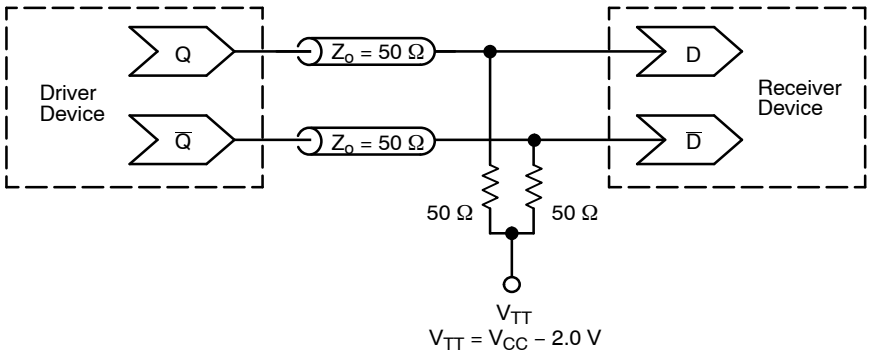

Figure 4. Typical Termination for Output Driver and Device Evaluation (See Application Note AND8020/D – Termination of ECL Logic Devices.)

Share Feedback
Your Opinion Matters

Resource Reference of Application Notes

AN1405/D – ECL Clock Distribution Techniques

AN1406/D – Designing with PECL (ECL at +5.0 V)

AN1503/D – ECLinPS™ I/O SPiCE Modeling Kit

AN1504/D – Metastability and the ECLinPS Family

AN1568/D – Interfacing Between LVDS and ECL

AN1672/D – The ECL Translator Guide

AND8001/D – Odd Number Counters Design

AND8002/D – Marking and Date Codes

AND8020/D – Termination of ECL Logic Devices

AND8066/D – Interfacing with ECLinPS

AND8090/D – AC Characteristics of ECL Devices

ECLinPS is a trademark of Semiconductor Components Industries, LLC dba “**onsemi**” or its affiliates and/or subsidiaries in the United States and/or other countries.

Share Feedback
Your Opinion Matters

LQFP−32, 7x7
CASE 561AB
ISSUE O

DATE 19 JUN 2008

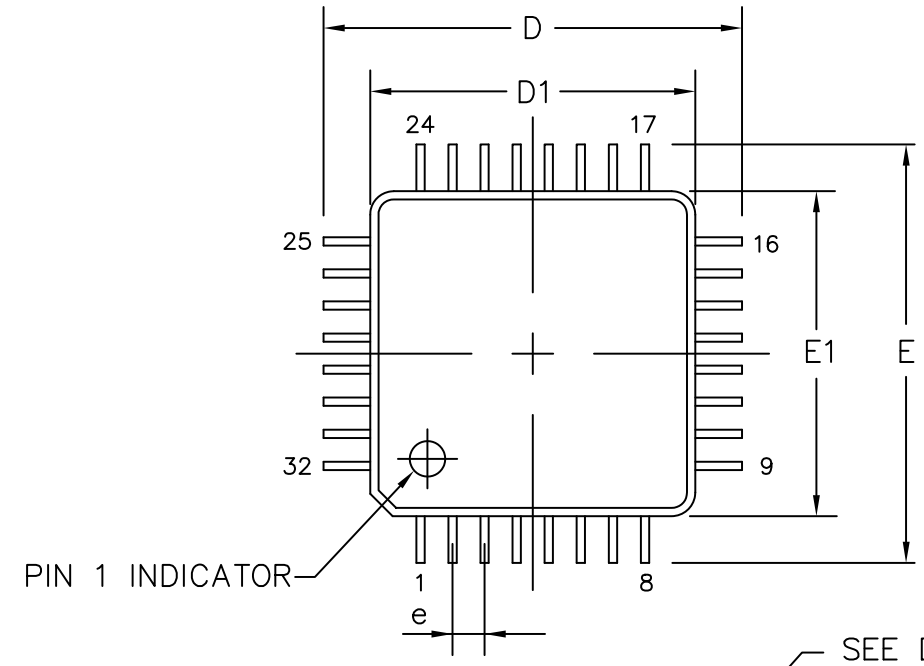

SYMBOL	MIN	NOM	MAX
A	–	–	1.60
A1	0.05	–	0.15
A2	1.35	1.40	1.45
B	0.30	0.37	0.45
B1	0.30	0.35	0.40
C	0.09	–	0.20
C1	0.09	–	0.16
D	9.00 BSC		
D1	7.00 BSC		
E	9.00 BSC		
E1	7.00 BSC		
e	0.80 BSC.		
L	0.45	0.60	0.75
L1	1.00		
R1	0.08	–	0.20
α°	11	–	13
β°	0	–	7
γ°	0	–	–

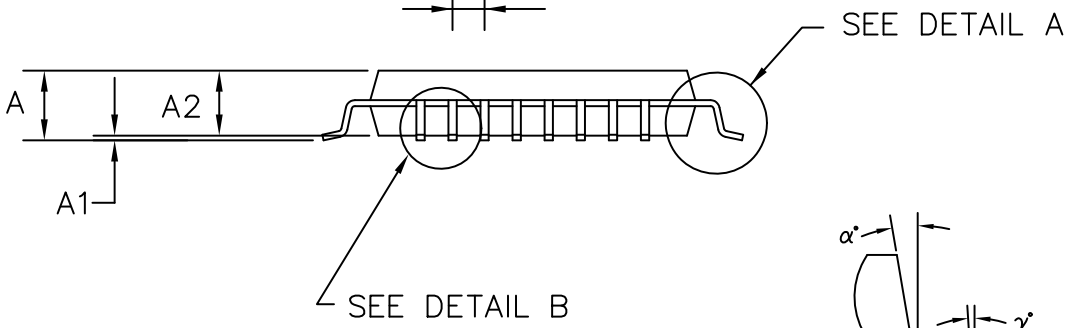

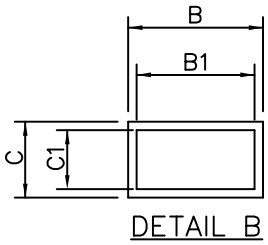

DETAIL B

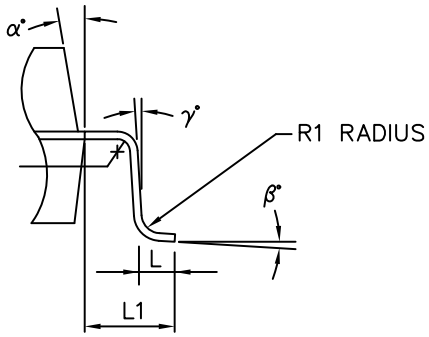

DETAIL A

ALL DIMENSIONS IN MM

DOCUMENT NUMBER:	**98AON30893E**	Electronic versions are uncontrolled except when accessed directly from the Document Repository. Printed versions are uncontrolled except when stamped "CONTROLLED COPY" in red.	
DESCRIPTION:	**32 LEAD LQFP, 7X7**		**PAGE 1 OF 1**

onsemi and onsemi are trademarks of Semiconductor Components Industries, LLC dba **onsemi** or its subsidiaries in the United States and/or other countries. **onsemi** reserves the right to make changes without further notice to any products herein. **onsemi** makes no warranty, representation or guarantee regarding the suitability of its products for any particular purpose, nor does **onsemi** assume any liability arising out of the application or use of any product or circuit, and specifically disclaims any and all liability, including without limitation special, consequential or incidental damages. **onsemi** does not convey any license under its patent rights nor the rights of others.

onsemi, , and other names, marks, and brands are registered and/or common law trademarks of Semiconductor Components Industries, LLC dba "**onsemi**" or its affiliates and/or subsidiaries in the United States and/or other countries. **onsemi** owns the rights to a number of patents, trademarks, copyrights, trade secrets, and other intellectual property. A listing of **onsemi**'s product/patent coverage may be accessed at www.onsemi.com/site/pdf/Patent−Marking.pdf. **onsemi** reserves the right to make changes at any time to any products or information herein, without notice. The information herein is provided "as−is" and **onsemi** makes no warranty, representation or guarantee regarding the accuracy of the information, product features, availability, functionality, or suitability of its products for any particular purpose, nor does **onsemi** assume any liability arising out of the application or use of any product or circuit, and specifically disclaims any and all liability, including without limitation special, consequential or incidental damages. Buyer is responsible for its products and applications using **onsemi** products, including compliance with all laws, regulations and safety requirements or standards, regardless of any support or applications information provided by **onsemi**. "Typical" parameters which may be provided in **onsemi** data sheets and/or specifications can and do vary in different applications and actual performance may vary over time. All operating parameters, including "Typicals" must be validated for each customer application by customer's technical experts. **onsemi** does not convey any license under any of its intellectual property rights nor the rights of others. **onsemi** products are not designed, intended, or authorized for use as a critical component in life support systems or any FDA Class 3 medical devices or medical devices with a same or similar classification in a foreign jurisdiction or any devices intended for implantation in the human body. Should Buyer purchase or use **onsemi** products for any such unintended or unauthorized application, Buyer shall indemnify and hold **onsemi** and its officers, employees, subsidiaries, affiliates, and distributors harmless against all claims, costs, damages, and expenses, and reasonable attorney fees arising out of, directly or indirectly, any claim of personal injury or death associated with such unintended or unauthorized use, even if such claim alleges that **onsemi** was negligent regarding the design or manufacture of the part. **onsemi** is an Equal Opportunity/Affirmative Action Employer. This literature is subject to all applicable copyright laws and is not for resale in any manner.

ADDITIONAL INFORMATION

TECHNICAL PUBLICATIONS:
Technical Library: www.onsemi.com/design/resources/technical−documentation
onsemi Website: www.onsemi.com

ONLINE SUPPORT: www.onsemi.com/support
For additional information, please contact your local Sales Representative at www.onsemi.com/support/sales