Dual-Channel/Multi-Phase Controller for DrMOS

NCP81232

The NCP81232, a dual−channel/multi−phase synchronous buck controller, provides power management solutions for various applications supported by DrMOS. It has 8 programmable power−stage configurations, differential voltage and current sense, flexible power sequence programming, and comprehensive protections.

Features

- Vin = 4.5~20 V with Input Feedforward
- Integrated 5.35 V LDO
- Vout = 0.6 V ~ 5.3 V
- Fsw = 200k ~ 1.2 MHz
- PWM Output Compatible to 3.3 V and 5 V DrMOS
- Flexible 8 Combinations of Power Stage Configurations (1~2 Output Rails, 1~4 Phases)
- DDR Power Mode Option
- Interleaved Operation
- Differential Output Voltage Sense
- Differential Current Sense Compatible for both Inductor DCR Sense and DrMOS Iout
- 2 Enables with Programmable Input UVLO
- Programmable DrMOS Power Ready Detection (DRVON)
- 2 Power Good Indicators
- Comprehensive Fault Indicator
- Externally Programmable Soft Start and Delay Time
- Programmable Hiccup Over Current Protection
- Hiccup Under Voltage Protection
- Recoverable Over Voltage Protection
- Hiccup Over Temperature Protection
- Thermal Shutdown Protection
- QFN−40, 5x5 mm, 0.4 mm Pitch Package
- This is a Pb−Free Device

Typical Applications

- Telecom Applications
- Server and Storage System
- Multiple Rail Systems
- DDR Applications

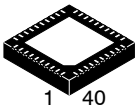

QFN40
CASE 485CR

MARKING DIAGRAM

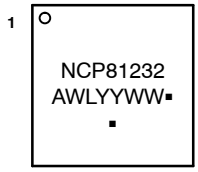

A	= Assembly Location
WL	= Wafer Lot
YY	= Year
WW	= Work Week
▪	= Pb−Free Package

(Note: Microdot may be in either location)

ORDERING INFORMATION

Device	Package	Shipping†
NCP81232MNTXG	QFN40 (Pb−Free)	5,000 / Tape & Reel

†For information on tape and reel specifications, including part orientation and tape sizes, please refer to our Tape and Reel Packaging Specification Brochure, BRD8011/D.

© Semiconductor Components Industries, LLC, 2015

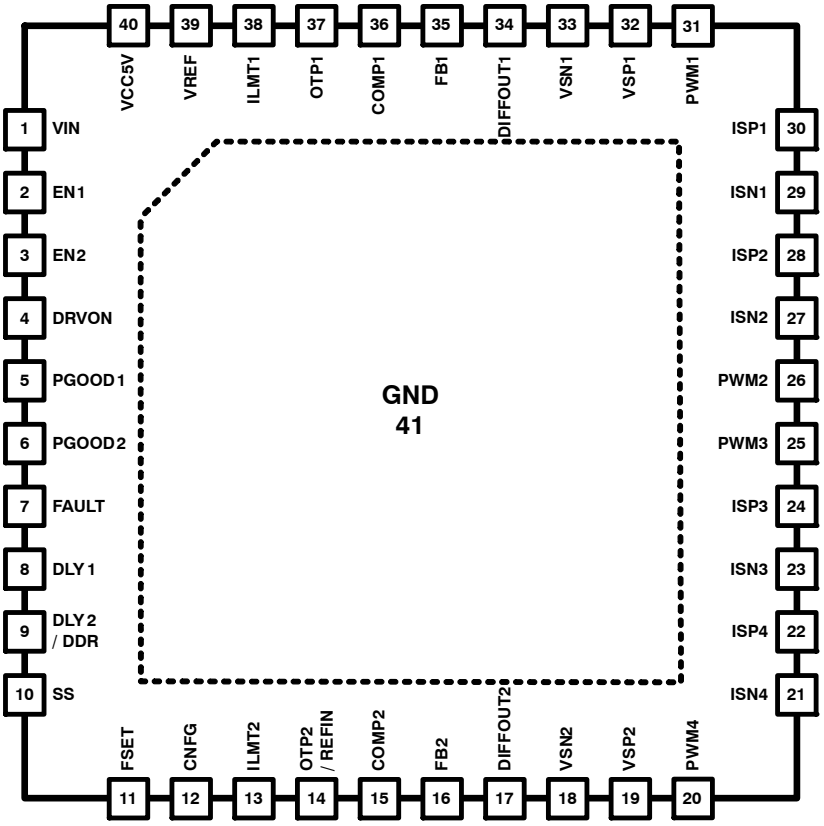

Figure 1. Pin Configuration

PIN DESCRIPTION

Pin	Name	Type	Description
1	VIN	Power Input	Power Supply Input. Power supply input pin of the device, which is connected to the integrated 5V LDO. 4.7 μF or more ceramic capacitors must bypass this input to power ground. The capacitors should be placed as close as possible to this pin.
2	EN1	Analog Input	Enable 1. Logic high enables channel 1 and logic low disables channel 1. Input supply UVLO can be programmed at this pin for channel 1.
3	EN2	Analog Input	Enable 2. Logic high enables channel 2 and logic low disables channel 2. Input supply UVLO can be programmed at this pin for channel 2.
4	DRVON	Logic Input	Driver On. Logic high input means drivers' power is ready.
5	PGOOD1	Logic Output	Power GOOD 1. Open−drain output. Provides a logic high valid power good output signal, indicating the regulator's output is in regulation window of channel 1.
6	PGOOD2	Logic Output	Power GOOD 2. Open−drain output. Provides a logic high valid power good output signal, indicating the regulator's output is in regulation window of channel 2.
7	FAULT	Logic Output	Fault. Digital output to indicate fault mode.
8	DLY1	Analog Input	Delay 1. A resistor from this pin to GND programs delay time of soft start for channel 1.
9	DLY2 /DDR	Analog Input	Delay 2 / DDR. A resistor from this pin to GND programs delay time of soft start for channel 2. Short to GND to have DDR operation mode.
10	SS	Analog Input	Soft Start Time. A resistor from this pin to ground programs soft start time for both channels.
11	FSET	Analog Input	Frequency Selection. A resistor from this pin to ground programs switching frequency.
12	CNFG	Analog Input	Configuration. A resistor from this pin to ground programs configuration of power stages.
13	ILIMT2	Analog Input	Limit of Current 2. Voltage at this pin sets over−current threshold for channel 2.

Share Feedback
Your Opinion Matters

PIN DESCRIPTION

Pin	Name	Type	Description
14	OTP2 /REFIN	Analog Input	Over Temperature Protection 2 / Reference Input. Voltage at this pin sets over−temperature threshold for channel 2. Reference input pin in DDR mode.
15	COMP2	Analog Output	Compensation 2. Output pin of error amplifier of channel 2.
16	FB2	Analog Input	Feedback 2. Inverting input of internal error amplifier for channel 2.
17	DIFFOUT2	Analog Output	Differential Amplifier Output 2. Output pin of differential voltage sense amplifier of channel 2.
18	VSN2	Analog Input	Voltage Sense Negative Input 2. Inverting input of differential voltage sense amplifier of channel 2.
19	VSP2	Analog Input	Voltage Sense Positive Input 2. Non−inverting input of differential voltage sense amplifier of channel 2.
20	PWM4	Analog Output	PWM 4. PWM output of phase 4.
21	ISN4	Analog Input	Current Sense Negative Input 4. Inverting input of differential current sense amplifier of phase 4.
22	ISP4	Analog Input	Current Sense Positive Input 4. Non−inverting input of differential current sense amplifier of phase 4.
23	ISN3	Analog Input	Current Sense Negative Input 3. Inverting input of differential current sense amplifier of phase 3.
24	ISP3	Analog Input	Current Sense Positive Input 3. Non−inverting input of differential current sense amplifier of phase 3.
25	PWM3	Analog Output	PWM 3. PWM output of phase 3.
26	PWM2	Analog Output	PWM 2. PWM output of phase 2.
27	ISN2	Analog Input	Current Sense Negative Input 2. Inverting input of differential current sense amplifier of phase 2.
28	ISP2	Analog Input	Current Sense Positive Input 2. Non−inverting input of differential current sense amplifier of phase 2.
29	ISN1	Analog Input	Current Sense Negative Input 1. Inverting input of differential current sense amplifier of phase 1.
30	ISP1	Analog Input	Current Sense Positive Input 1. Non−inverting input of differential current sense amplifier of phase 1.
31	PWM1	Analog Output	PWM 1. PWM output of phase 1.
32	VSP1	Analog Input	Voltage Sense Positive Input 1. Non−inverting input of differential voltage sense amplifier of channel 1.
33	VSN1	Analog Input	Voltage Sense Negative Input 1. Inverting input of differential voltage sense amplifier of channel 1.
34	DIFFOUT1	Analog Output	Differential Amplifier Output 1. Output pin of differential voltage sense amplifier of channel 1.
35	FB1	Analog Input	Feedback 1. Inverting input of internal error amplifier for channel 1.
36	COMP1	Analog Output	Compensation 1. Output pin of error amplifier of channel 1.
37	OTP1	Analog Input	Over Temperature Protection 1. Voltage at this pin sets over−temperature threshold for channel 1.
38	ILIMT1	Analog Input	Limit of Current 1. Voltage at this pin sets over−current threshold for channel 1.
39	VREF	Analog Output	Output of Reference. Output of 0.6 V reference. A 10nF ceramic capacitor bypasses this input to GND. This capacitor should be placed as close as possible to this pin.
40	VCC5V	Analog Power	Voltage Supply of Controller. Output of integrated 5.35V LDO and power supply input pin of control circuits. A 4.7 μF ceramic capacitor bypasses this input to GND. This capacitor should be placed as close as possible to this pin.
41	THERM /GND	Analog Ground	Thermal Pad and Analog Ground. Ground of internal control circuits. Must be connected to the system ground.

Share Feedback
Your Opinion Matters

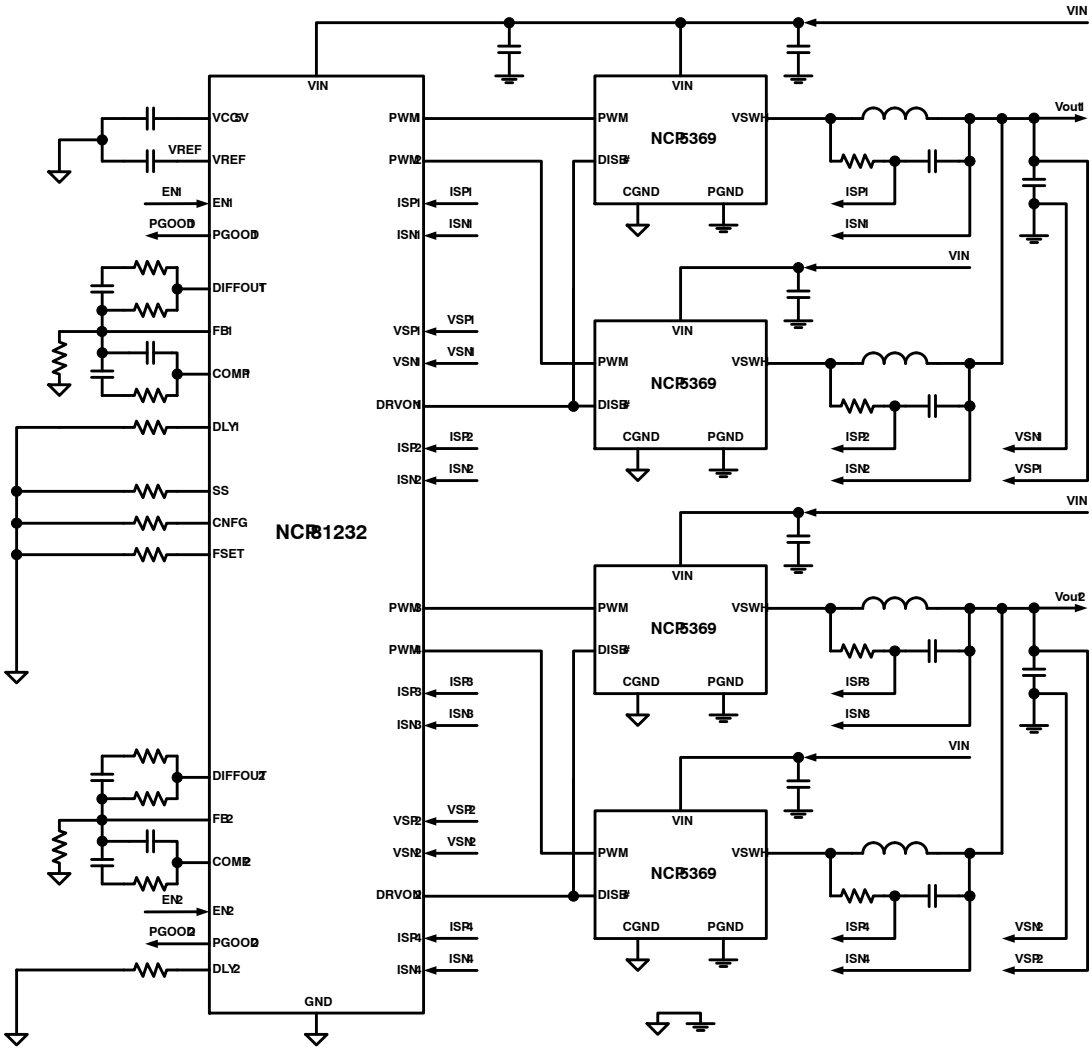

Figure 2. Typical Application Circuit for Dual Channel Applications (2 Phase + 2 Phase)

Share Feedback
Your Opinion Matters

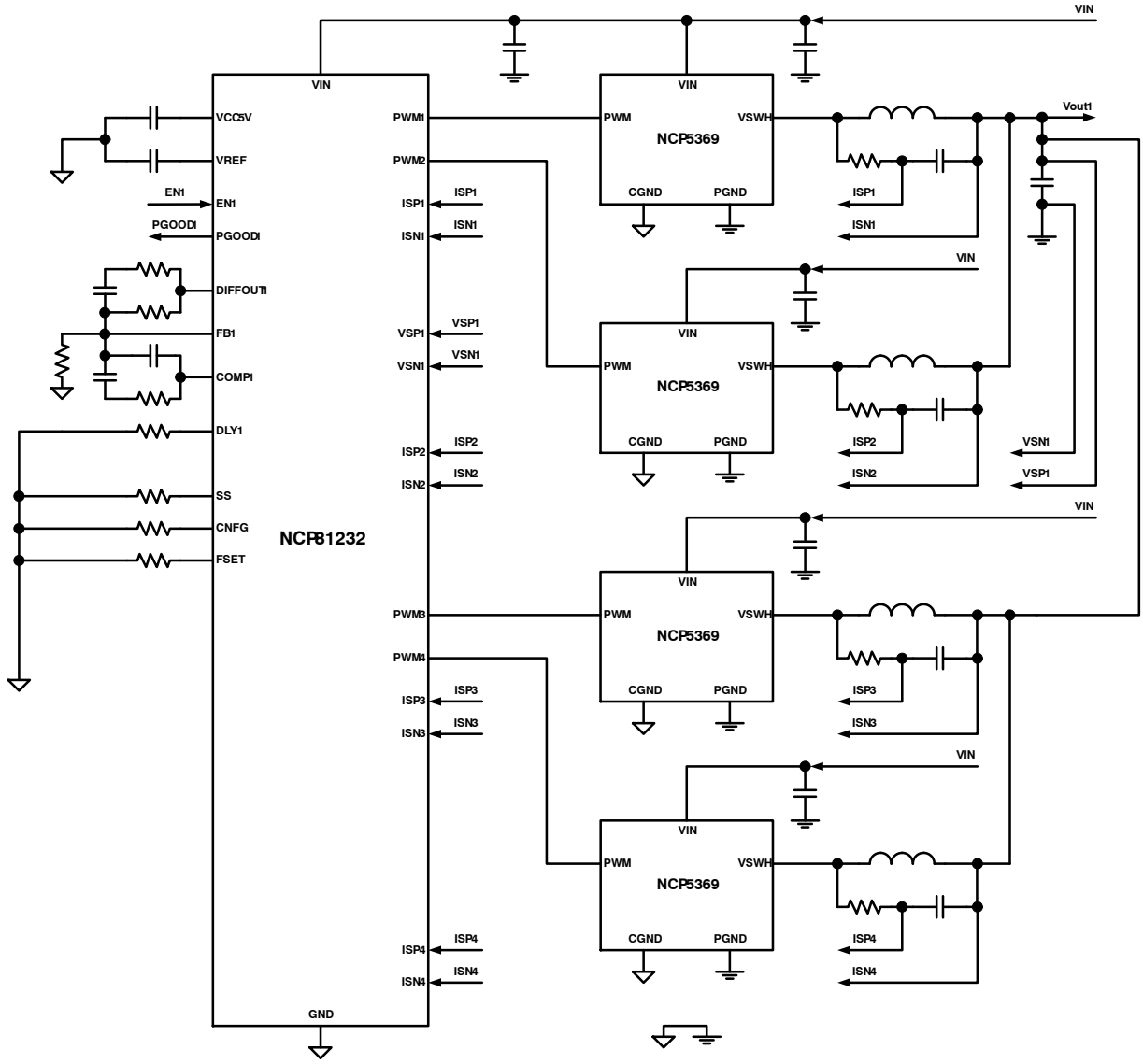

Figure 3. Typical Application Circuit for Single Channel Applications (4 Phase)

Share Feedback
Your Opinion Matters

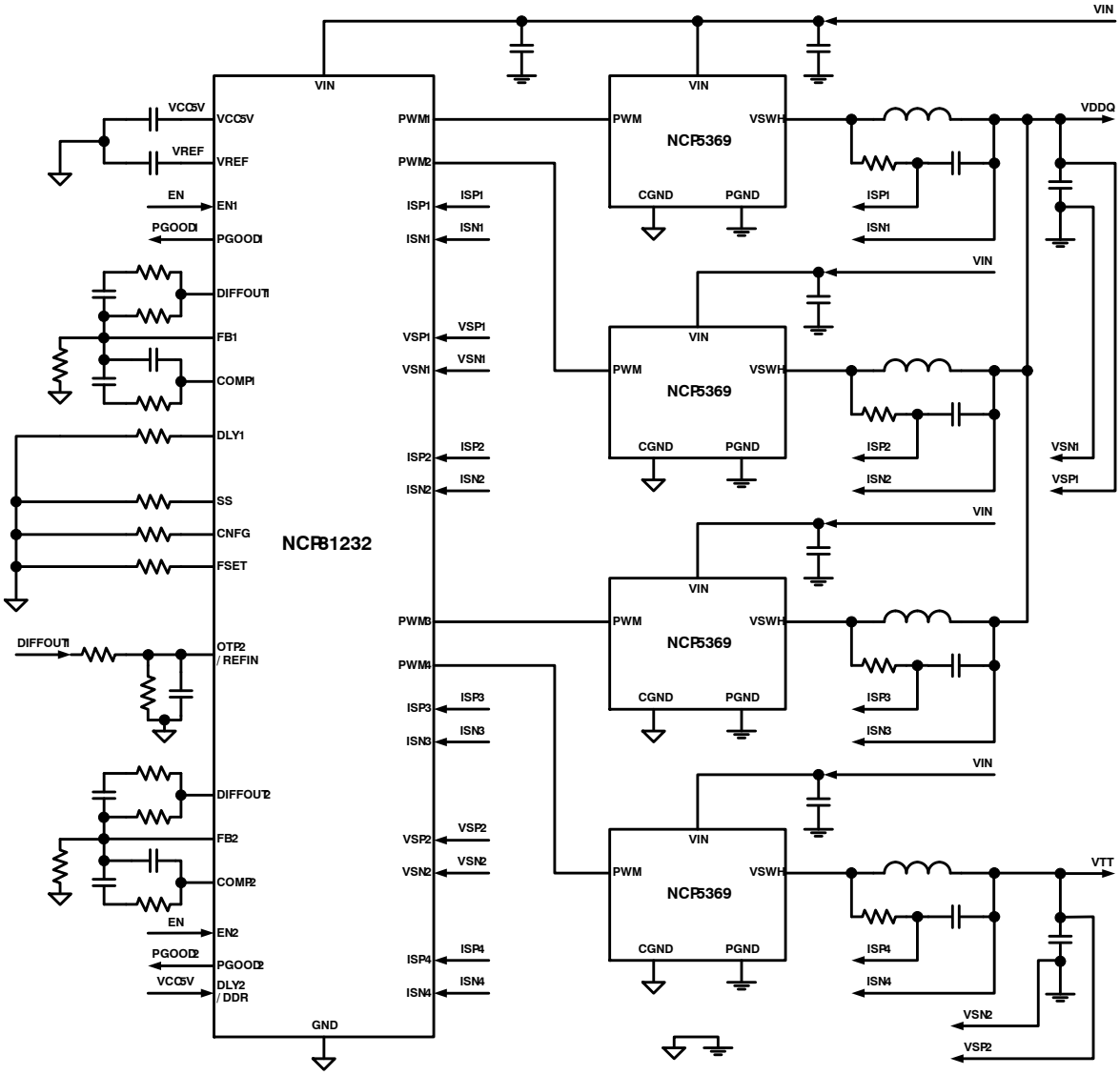

Figure 4. Typical Application Circuit for DDR Applications (3 Phase + 1 Phase)

Share Feedback
Your Opinion Matters

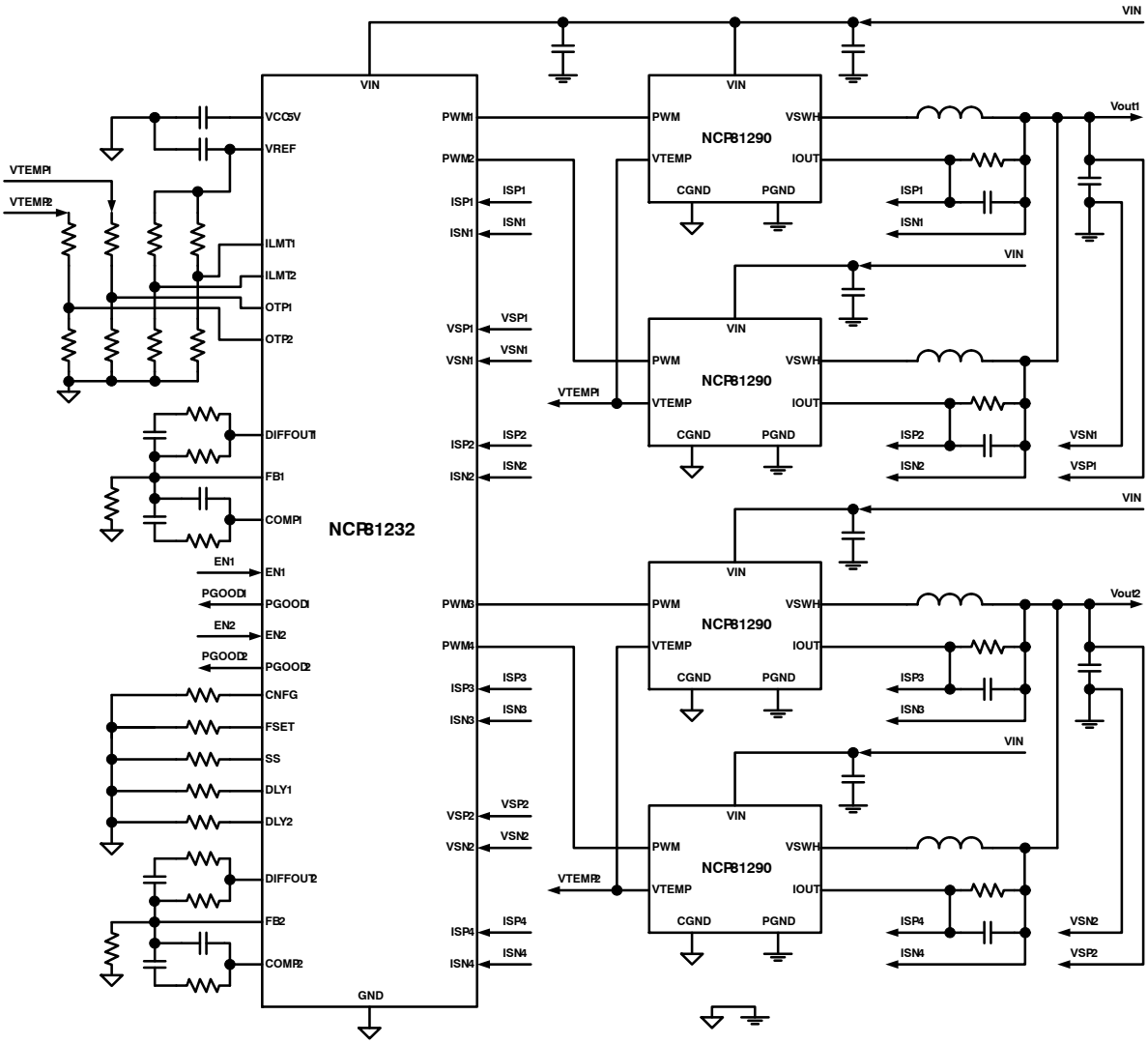

Figure 5. Typical Application Circuit for DrMOS with Integrated Current Sense and Temperature Sense

Share Feedback
Your Opinion Matters

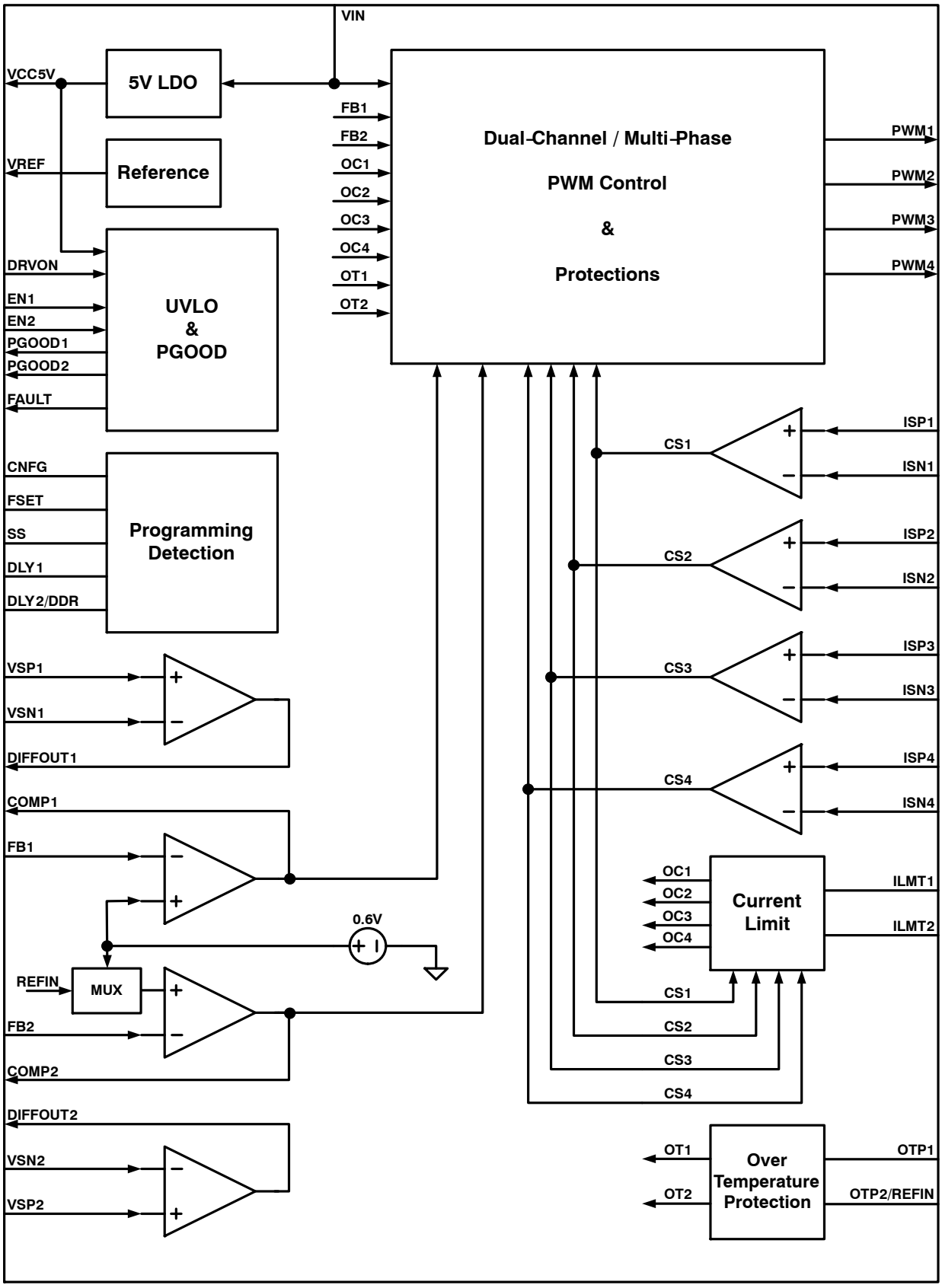

Figure 6. Functional Block Diagram

Share Feedback
Your Opinion Matters

MAXIMUM RATINGS

Symbol	Rating	Value		Unit
		Min	Max	
V_{VIN}	Power Supply Voltage to PGND		30	V
V_{VCC5V}	Supply Voltage VCC5V to GND	−0.3	6.5	V
V_{VSN}	VSNx to GND	−0.2	0.2	V
	Other Pins to GND	−0.3	VCC5V + 0.3	V
ESD HBM	Human Body Model (HBM) ESD Rating (Note 1)		4000	V
ESD MM	Machine Model (MM) ESD Rating (Note 1)		400	V
ESD CDM	Charge Device Mode (CDM) ESD Rating (Note 1)		2000	V
I_{LU}	Latch up Current: (Note 2) All pins, except digital pins Digital pins	 −100 −10	 100 10	mA
T_J	Operating Junction Temperature Range (Note 3)	−40	125	°C
T_A	Operating Ambient Temperature Range	−40	100	°C
T_{STG}	Storage Temperature Range	−55	150	°C
$R_{\Psi JC}$	Thermal Resistance Junction to Top Case (Note 4)	5.0		°C/W
$R_{\Psi JB}$	Thermal Resistance Junction to Board (Note 4)	3.5		°C/W
$R_{\theta JA}$	Thermal Resistance Junction to Ambient (Note 4)	38		°C/W
P_D	Power Dissipation (Note 5)	2.63		W
MSL	Moisture Sensitivity Level (Note 6)	1		−

Stresses exceeding those listed in the Maximum Ratings table may damage the device. If any of these limits are exceeded, device functionality should not be assumed, damage may occur and reliability may be affected.

1. This device is ESD sensitive. Handling precautions are needed to avoid damage or performance degradation.
2. Latch up Current per JEDEC standard: JESD78 class II.
3. The thermal shutdown set to 150°C (typical) avoids potential irreversible damage on the device due to power dissipation.
4. JEDEC standard JESD 51−7 (1S2P Direct−Attach Method) with 0 LFM. It is for checking junction temperature using external measurement.
5. The maximum power dissipation (PD) is dependent on input voltage, maximum output current and external components selected. T_A = 25°C, T_J_max = 125°C, PD = (T_J_max−T_amb)/Theta JA
6. Moisture Sensitivity Level (MSL): 1 per IPC/JEDEC standard: J−STD−020A.

Share Feedback
Your Opinion Matters

ELECTRICAL CHARACTERISTICS (V_{IN} = 12 V, typical values are referenced to T_A = 25°C, Min and Max values are referenced to T_A from −40°C to 125°C. unless other noted.)

Symbol	Characteristics	Test Conditions		Min	Typ	Max	Unit
V_{IN}	VIN Supply Voltage Range	(Note 8)		4.5	12	20	V
V_{CCUV-}	VCC5V Under−Voltage (UVLO) Threshold	VCC5V falling		3.7			V
V_{CCOK}	VCC5V OK Threshold	VCC5V rising				4.3	V
V_{CCHYS}	VCC5V UVLO Hysteresis				260		mV
VCC5V Regulator							
V_{CC}	Output Vo**SUPPLY VOLTAGE**ltage	6 V < VIN < 20 V, I_{VCC5V} = 15 mA (External), EN1 = EN2 = Low		5.2	5.35	5.5	V
	Load Regulation	I_{VCC5V} = 5 mA to 25 mA (External), EN1 = EN2 = Low		−2.0	0.2	2.0	%
V_{DO_VCC}	Dropout Voltage	VIN = 5 V, I_{VCC5V} = 25 mA (External), EN1 = EN2 = Low				200	mV
SUPPLY CURRENT							
I_{QVIN}	VIN Quiescent Current	EN1 high, 1 channel and 1 phase only EN1 and EN2 high, 2 channel and 2 phase per channel		– –	15 18	20 25	mA
I_{sdVIN}	VIN Shutdown Current	EN1 and EN2 low		–	8	10	mA
REGULATION REFERENCE							
V_{FB}	Regulated Feedback Voltage	Include offset of error amplifier	0°C to 85°C	596	600	604	mV
			−40°C to 125°C	594	600	606	
REFERENCE OUTPUT							
V_{VREF}	VREF Output Voltage	I_{VREF} = 500 μA		594	600	606	mV
	Load Regulation	I_{VREF} = 0 mA to 2 mA		−1.0		1.0	%
DIFFERENTIAL VOLTAGE−SENSE AMPLIFIER							
	Input Common Mode Voltage Range	(Note 8)		−0.2		V_{CC}−1.8	V
	Output Voltage Swing	(Note 8)				V_{CC}−1.8	V
GAIN_DVA	DC Gain	VSP−VSN = 0.6V to V_{CC}−1.8		0.995	1.0	1.005	V/V
BW_DVA	−3dB Gain Bandwidth	C_L = 20 pF to GND, R_L = 10 kΩ to GND (Note 8)			10		MHz
R_{VSEN}	Input Impedance	VSP − VSN = 3.5 V		1.0			MΩ
I_{VS}	Input Bias Current	VSP,VSN = 2.0 V		−400		400	nA
V_{osCS}	Input Offset Voltage	VSP − VSN = 0.6 V to V_{CC} − 1.8 V −40°C to 100°C −40°C to 125°C		 −1.3 −1.9		 1.3 1.9	mV
VOLTAGE ERROR AMPLIFIER							
$GAIN_{EA}$	Open−Loop DC Gain	(Note 8)			80		dB
GBW_{EA}	Unity Gain Bandwidth	(Note 8)			20		MHz
SR_{COMP}	Slew Rate	(Note 8)			20		V/μs
$V_{maxCOMP}$	COMP Voltage Swing	I_{COMP}(source) = 2 mA		3.2	3.4	–	V
$V_{minCOMP}$		I_{COMP}(sink) = 2 mA		–	1.05	1.15	

Product parametric performance is indicated in the Electrical Characteristics for the listed test conditions, unless otherwise noted. Product performance may not be indicated by the Electrical Characteristics if operated under different conditions.

7. Guaranteed by design, not tested in production.

Product parametric performance is indicated in the Electrical Characteristics for the listed test conditions, unless otherwise noted. Product performance may not be indicated by the Electrical Characteristics if operated under different conditions.

8. Guaranteed by design, not tested in production.

Share Feedback
Your Opinion Matters

ELECTRICAL CHARACTERISTICS (V_{IN} = 12 V, typical values are referenced to T_A = 25°C, Min and Max values are referenced to T_A from −40°C to 125°C. unless other noted.) (continued)

Symbol	Characteristics	Test Conditions		Min	Typ	Max	Unit
VOLTAGE ERROR AMPLIFIER							
I_{FB}	FB, REFIN Bias Current	V_{FB} = V_{REFIN} = 1.0 V		−400		400	nA
DIFFERENTIAL CURRENT−SENSE AMPLIFIER							
$GAIN_{CA}$	DC Gain				6		V/V
BW_{CA}	−3dB Gain Bandwidth	(Note 8)			10		MHz
	Input Common Mode Voltage Range	(Note 8)		−0.2		V_{CC}+0.1	V
	Differential Input Voltage Range	(Note 8)		−60	−	60	mV
I_{CS}	Input Bias Current	ISP,ISN = 2.5 V		−100		100	nA
SWITCHING FREQUENCY							
F_{SW}	Switching Frequency	Rfs = 2.7k Rfs = 5.1k Float Rfs = 8.2k Short to GND Rfs = 13k Rfs = 20k Rfs = 33k		180 270 360 450 540 720 900 1080	200 300 400 500 600 800 1000 1200	220 330 440 550 660 880 1100 1320	kHz
I_{FS}	Source Current			45	50	55	μA
SYSTEM RESET TIME							
T_{RST}	System Reset Time	Measured from EN to start of soft start with T_{DL} = 0 ms		1.8	2.0	2.2	ms
DELAY TIME							
T_{DL}	Delay Time	Float Rdl = 33k Rdl = 20k Rdl = 13k Rdl = 8.2k Rdl = 5.1k Rdl = 2.7k Short to GND (DLY1 Only) Short to GND (DDR Mode, DLY2 Only)	(Note 8)	− 0.9 1.8 2.7 3.6 7.2 10.8 18 −	0 1.0 2.0 3.0 4.0 8.0 12 20 T_{DL1}	− 1.1 2.2 3.3 4.4 8.8 13.2 22 −	ms
I_{DL}	Source Current			45	50	55	μA
SOFT START TIME							
T_{SS}	Soft Start Time	OTP Configuration 1 (Note 8)	Rss = 13k Float Rss = 20k Rss = 33k	0.9 2.7 3.6 5.4	1.0 3.0 4.0 6.0	1.1 3.3 4.4 6.6	ms
		OTP Configuration 2 (Note 8)	Rss = 2.7k Short to GND Rss = 5.1k Rss = 8.2k	0.9 2.7 3.6 5.4	1.0 3.0 4.0 6.0	1.1 3.3 4.4 6.6	
I_{SS}	Source Current			45	50	55	μA

Product parametric performance is indicated in the Electrical Characteristics for the listed test conditions, unless otherwise noted. Product performance may not be indicated by the Electrical Characteristics if operated under different conditions.

7. Guaranteed by design, not tested in production.

Product parametric performance is indicated in the Electrical Characteristics for the listed test conditions, unless otherwise noted. Product performance may not be indicated by the Electrical Characteristics if operated under different conditions.

8. Guaranteed by design, not tested in production.

Share Feedback
Your Opinion Matters

ELECTRICAL CHARACTERISTICS (V_{IN} = 12 V, typical values are referenced to T_A = 25°C, Min and Max values are referenced to T_A from −40°C to 125°C. unless other noted.) (continued)

Symbol	Characteristics	Test Conditions		Min	Typ	Max	Unit
CONFIGURATION							
Channel 1	PWM Configuration		(Note 8)	**Channel 1**		**Channel 2**	
PWM1		Float		PWM1		PWM4	
PWM1, PWM2		Rcnfg = 2.7k		PWM1, PWM2		PWM4	
PWM1, PWM2, PWM3		Rcnfg = 5.1k		PWM1, PWM2, PWM3		PWM4	
PWM1, PWM2		Short to GND		PWM1, PWM2		PWM3, PWM4	
PWM1		Rcnfg = 8.2k		PWM1			
PWM1, PWM2		Rcnfg = 13k		PWM1, PWM2			
PWM1, PWM2, PWM3		Rcnfg = 20k		PWM1, PWM2, PWM3			
PWM1, PWM2, PWM3, PWM4		Rcnfg = 33k		PWM1, PWM2, PWM3, PWM4			
I_{CNFG}	Source Current			45	50	55	μA
PGOOD							
T_{d_PGOOD}	PGOOD Startup Delay	Measured from end of Soft Start to PGOOD assertion			100		μs
	PGOOD Shutdown Delay	Measured from EN to PGOOD de−assertion			240		ns
V_{IPGOOD}	PGOOD Low Voltage	I_{PGOOD}= 4 mA (sink)		–	–	0.3	V
$I_{lkgPGOOD}$	PGOOD Leakage Current	PGOOD = 5 V		–	–	1.0	μA
FAULT							
V_{FAULT_H}	FAULT Output High Voltage	I_{sourse} = 0.5 mA		V_{CC}−0.5			V
V_{FAULT_L}	FAULT Output Low Voltage	I_{sink} = 0.5 mA				0.5	V
PROTECTIONS							
V_{OCTH+}	Positive Current Limit Threshold	Measured from ILIMT to GND	ISP−ISN = 50 mV	285	300	315	mV
			ISP−ISN = 20 mV	110	120	130	
$V_{OCTH−}$	Negative Current Limit Threshold	Measured from ILIMT to GND (only active in non−latched OVP)	ISP−ISN = −50 mV	285	300	315	mV
			ISP−ISN = −20 mV	110	120	130	
	Positive Over Current Protection (OCP) Debounce Time	(Note 8)			8 Cycles		μs
V_{UVTH}	Under Voltage Protection (UVP) Threshold	Voltage from FB to GND		500	510	520	mV
V_{UVHYS}	Under Voltage Protection (UVP) Hysteresis	Voltage from FB to GND			20		mV

Product parametric performance is indicated in the Electrical Characteristics for the listed test conditions, unless otherwise noted. Product performance may not be indicated by the Electrical Characteristics if operated under different conditions.

7. Guaranteed by design, not tested in production.

Product parametric performance is indicated in the Electrical Characteristics for the listed test conditions, unless otherwise noted. Product performance may not be indicated by the Electrical Characteristics if operated under different conditions.

8. Guaranteed by design, not tested in production.

Share Feedback
Your Opinion Matters

ELECTRICAL CHARACTERISTICS (V_{IN} = 12 V, typical values are referenced to T_A = 25°C, Min and Max values are referenced to T_A from −40°C to 125°C. unless other noted.) (continued)

Symbol	Characteristics	Test Conditions	Min	Typ	Max	Unit
PROTECTIONS						
	Under Voltage Protection (UVP) Debounce Time	(Note 8)		1.5		us
	Shutdown Time in Hiccup Mode	UVP (Note 8) OCP (Note 8) OTP (Note 8)		$12*T_{SS}$ $16*T_{SS}$ $8*T_{SS}$		ms
V_{OVTH_L}	First−Level Over Voltage Protection (OVP_L) Threshold	Voltage from FB to GND	650	660	670	mV
V_{LOVHYS}	First−Level Over Voltage Protection (OVP_L) Hysteresis	Voltage from FB to GND		−20		mV
	First−Level Over Voltage Protection (OVP_L) Debounce Time	(Note 8)		1.0		μs
V_{OVTH_H}	Second−Level Over Voltage Protection (OVP_H) Threshold	Voltage from FB to GND	710	720	730	mV
V_{HOVHYS}	Second−Level Over Voltage Protection (OVP_H) Hysteresis	Voltage from FB to GND		−20		mV
	Second−Level Over Voltage Protection (OVP_H) Debounce Time	(Note 8)		1.0		us
V_{OS_OTP}	Offset Voltage of OTP Comparator	V_{ILMT} = 200 mV	−2		2	mV
I_{OTP}	OTP Source Current		9	10	11	μA
	OTP Debounce Time	(Note 8)		160		ns
T_{sd}	Thermal Shutdown (TSD) Threshold	(Note 8)	140	165		°C
T_{rec}	Recovery Temperature Threshold	(Note 8)		125		°C
	Thermal Shutdown (TSD) Debounce Time	(Note 8)		120		ns
ENABLE						
V_{EN_TH}	EN ON Threshold		0.75	0.8	0.85	V
I_{EN_HYS}	Hysteresis Source Current	VCC5V is OK	25	30	35	μA
DRVON						
V_{DRVON_TH}	DRVON ON Threshold		0.75	0.8	0.85	V
I_{DRVON_HYS}	Hysteresis Source Current	VCC5V is OK	25	30	35	μA
PWM MODULATION						
T_{on_min}	Minimum On Time	(Note 8)			50	ns
T_{off_min}	Minimum Off Time	(Note 8)	160			ns
	0% Duty Cycle	COMP voltage when the PWM outputs remain Lo (Note 8)		1.3		V
	100% Duty Cycle	COMP voltage when the PWM outputs remain HI, V_{in} = 12.0 V (Note 8)		2.5		V
	Ramp Feed − forward Voltage Range	(Note 8)	4.5		20	V
PWM OUTPUT						
V_{PWM_H}	PWM Output High Voltage	I_{sourse} = 0.5 mA	V_{CC}−0.2			V
V_{PWM_L}	PWM Output Low Voltage	I_{sink} = 0.5 mA			0.2	V

Product parametric performance is indicated in the Electrical Characteristics for the listed test conditions, unless otherwise noted. Product performance may not be indicated by the Electrical Characteristics if operated under different conditions.

7. Guaranteed by design, not tested in production.

Product parametric performance is indicated in the Electrical Characteristics for the listed test conditions, unless otherwise noted. Product performance may not be indicated by the Electrical Characteristics if operated under different conditions.

8. Guaranteed by design, not tested in production.

Share Feedback
Your Opinion Matters

ELECTRICAL CHARACTERISTICS (V_{IN} = 12 V, typical values are referenced to T_A = 25°C, Min and Max values are referenced to T_A from −40°C to 125°C. unless other noted.) (continued)

Symbol	Characteristics	Test Conditions	Min	Typ	Max	Unit
PWM OUTPUT						
	Rise and Fall Times	C_L (PCB) = 50 pF, measured between 10% & 90% of V_{CC} (Note 8)		10		ns
I_{LK_PWM}	Leakage Current in Hi−Z Stage		−1.0		1.0	μA

Product parametric performance is indicated in the Electrical Characteristics for the listed test conditions, unless otherwise noted. Product performance may not be indicated by the Electrical Characteristics if operated under different conditions.

7. Guaranteed by design, not tested in production.

Product parametric performance is indicated in the Electrical Characteristics for the listed test conditions, unless otherwise noted. Product performance may not be indicated by the Electrical Characteristics if operated under different conditions.

8. Guaranteed by design, not tested in production.

Table 1. RESISTOR OPTIONS FOR FUNCTION PROGRAMMING

Resistance Range (kΩ)			Resistor Options (kΩ)				
Min	Typ	Max	±5%	±1%			
2.565	2.7	2.835	2.7	2.61	2.67	2.74	2.80
4.845	5.1	5.355	5.1	4.87	4.99	5.11	5.23
7.79	8.2	8.61	8.2	7.87	8.06	8.25	8.45
12.35	13	13.65	13	12.4	12.7	13	13.3
19	20	21	20	19.1	19.6	20	20.5
31.35	33	34.65	33	31.6	32.4	33.2	34

Share Feedback
Your Opinion Matters

DETAILED DESCRIPTION

General

The NCP81232, a dual−channel/multi−phase synchronous buck controller, provides power management solutions for various applications supported by DrMOS. It has 8 programmable power−stage configurations, differential voltage and current sense, flexible power sequence programming, and comprehensive protections.

Operation Modes

The NCP81232 has eight programmable operation configurations as shown in Figure 7. All the phases in the same channel are paralleled together in output of power stage with a common voltage−sense feedback. All the input pins of voltage sense and current senses in unused channel and phases can be left float. For single−channel configuration, EN2 pin is recommended to be pulled low to ground.

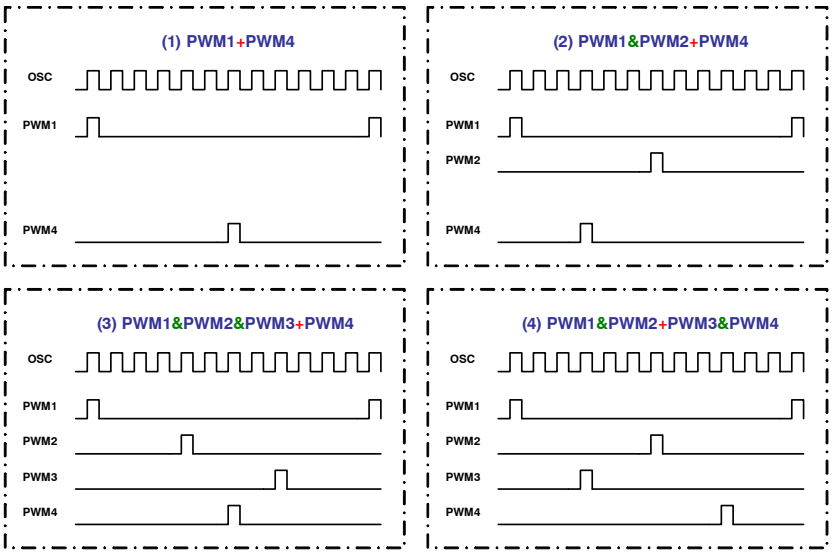

(1) Dual Channel Operation

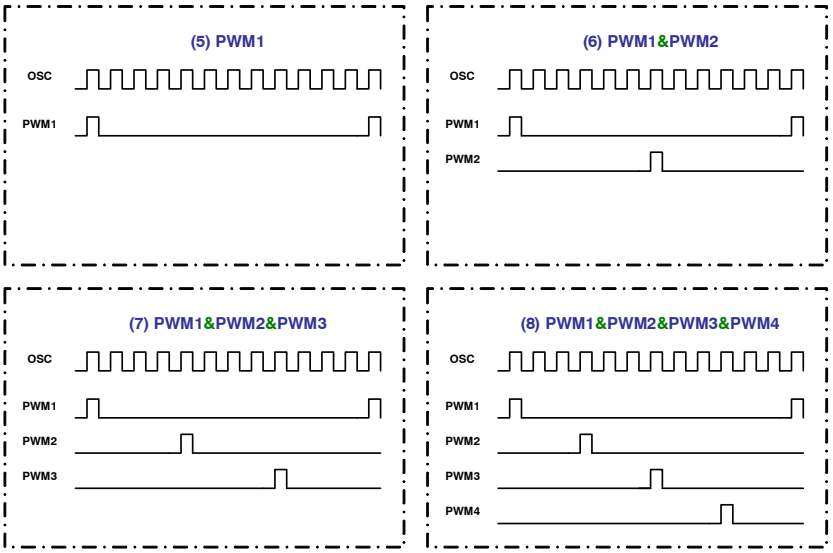

(2) Single Channel Operation

Figure 7. 8 Programmable Configurations and Interleaved Operation Among Phases

Soft Start

The NCP81232 has a soft start function and the soft start time is externally programmed at SS pin. The output starts to ramp up following a system reset period TRST and a programmable delay time TDLY after the device is enabled and both VCC5V and DRVON are ready. The device is able to start up smoothly under an output pre−biased condition without discharging the output before ramping up.

Share Feedback
Your Opinion Matters

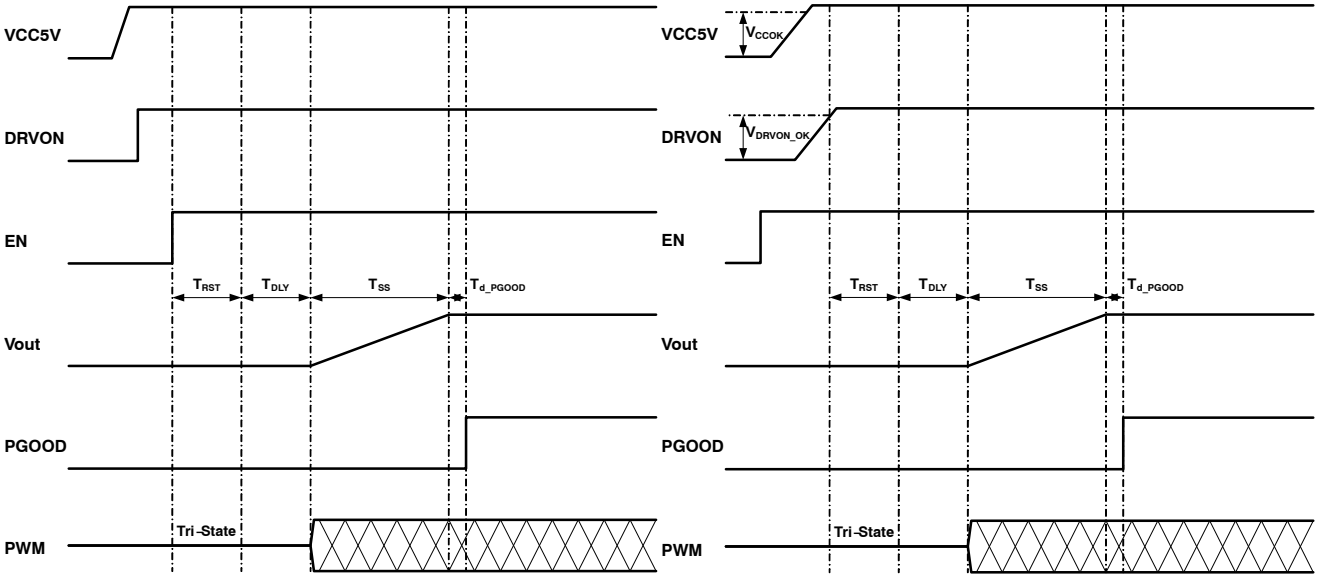

(1) VCC5V and DRVON Ready before EN (2) VCC5V and DRVON Ready after EN

Figure 8. Timing Diagrams of Power Up Sequence

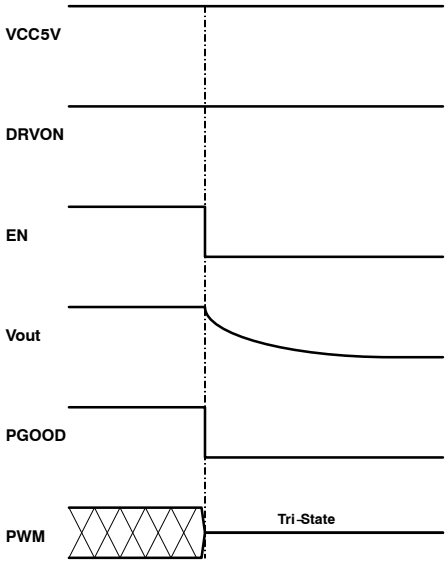

Figure 9. Timing Diagram of Power Down Sequence

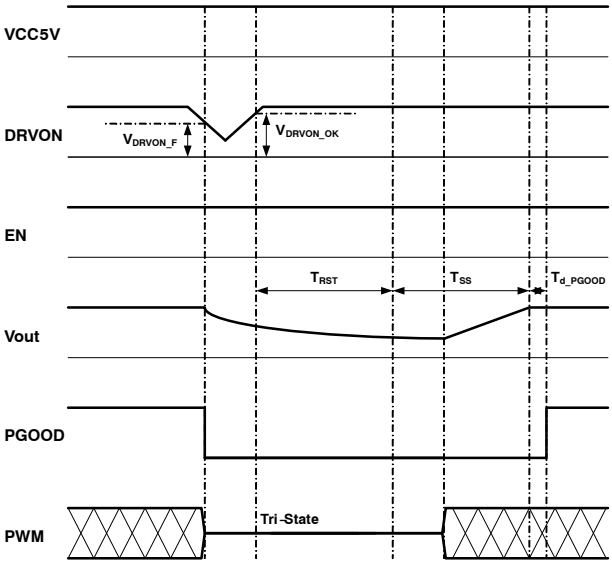

Figure 10. Timing Diagram of DRVON UVLO

Share Feedback
Your Opinion Matters

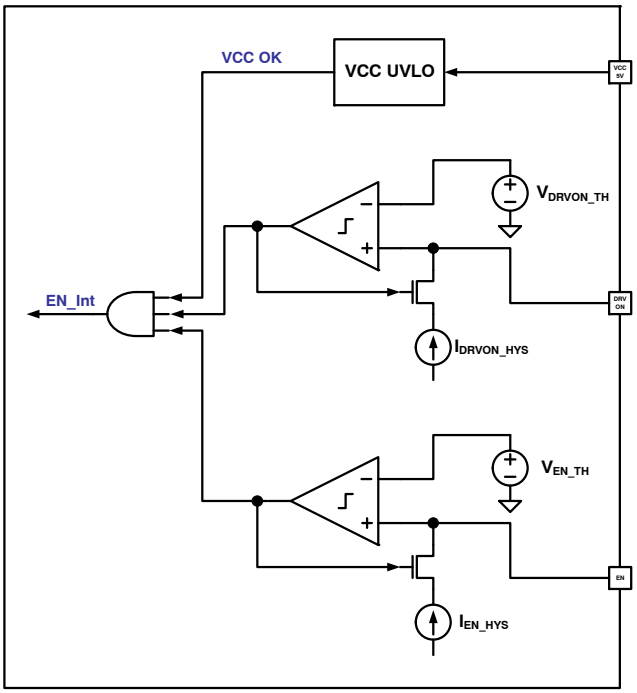

Figure 11. Enable, DRVON, and VCC UVLO

Enable and Input UVLO

The NCP81232 is enabled when the voltage at EN pin is higher than an internal threshold VEN_TH = 0.8 V. A hysteresis can be programmed by an external resistor REN connected to EN pin as shown in Figure 12. The high threshold in ENABLE signal is

$$V_{EN_H} = V_{EN_TH} \quad \text{(eq. 1)}$$

The low threshold in ENABLE signal is

$$V_{EN_L} = V_{EN_TH} - V_{EN_HYS} \quad \text{(eq. 2)}$$

The programmable hysteresis in ENABLE signal is

$$V_{EN_HYS} = I_{EN_HYS} \cdot R_{EN} \quad \text{(eq. 3)}$$

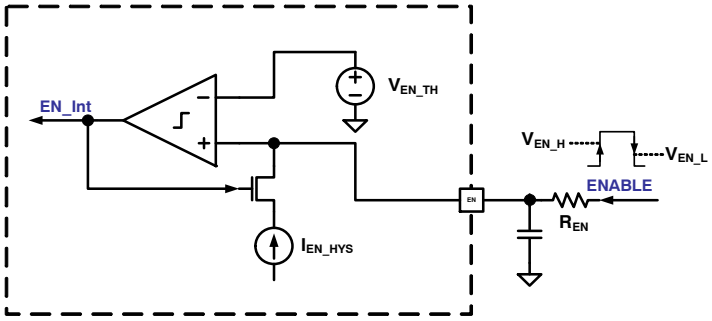

Figure 12. Enable and Hysteresis Programming

A UVLO function for input power supply can be implemented at EN pins. As shown in Figure 13, the UVLO thresholds and hysteresis can be programmed by two external resistors.

$$V_{IN_H} = \left(\frac{R_{EN1}}{R_{EN2}} + 1\right) \cdot V_{EN_TH} \quad \text{(eq. 4)}$$

$$V_{IN_L} = V_{IN_H} - V_{IN_HYS} \quad \text{(eq. 5)}$$

$$V_{IN_HYS} = I_{EN_HYS} \cdot R_{EN1} \quad \text{(eq. 6)}$$

Share Feedback
Your Opinion Matters

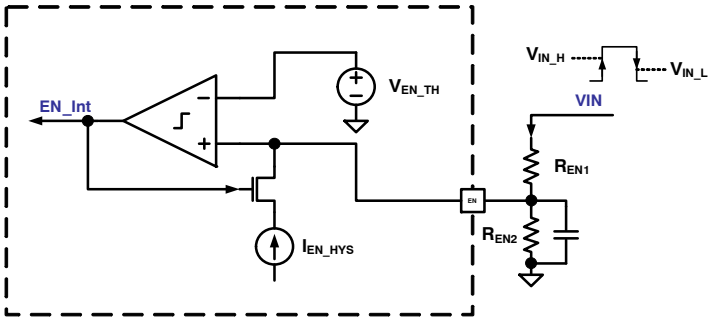

Figure 13. Enable and Input Supply UVLO Circuit

To avoid undefined operation, EN pins cannot be left float in applications.

DDR Mode Operation

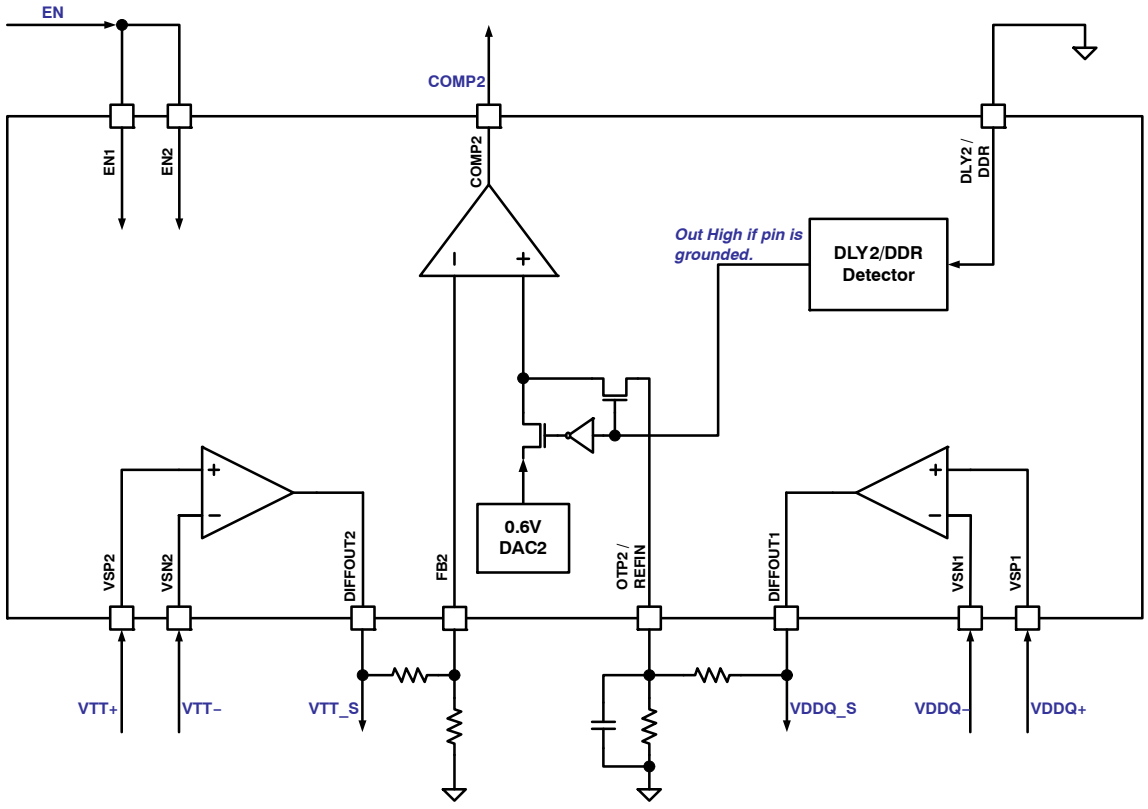

Figure 14. Block Diagram of DDR Mode Operation

If DLY2/DDR pin is shorted to GND before the NCP81232 starts up, as shown in Figure 14, the device is internally configured to operate in DDR mode. In DDR mode, the channel 1 provides power for VDDQ rail and the channel 2 provides power for VTT rail. The two enable pins need to be connected together, and the CNFG pin can be programmed to be one of the four dual−channel options (1+1, 2+1, 3+1, 2+2). The both channels have the same delay time programmed at DLY1 pin, and VTT rail always tracks with VDDQ/2. An external resistor divider, which is connected from DIFFOUT1 to GND, is employed to get 0.6V at REFIN pin in steady−state operation. Another external resistor divider, which is connected from DIFFOUT2 to GND, is applied to obtain an expected VTT voltage considering FB2 voltage is 0.6V as REFIN.

In DDR mode, two channels have independent fault detections and protections but have hiccup together if anyone of them needs to start a hiccup.

Output Voltage Sensing and Regulation

The NCP81233 has a differential voltage−sense amplifier. As shown in Figure 15, the remote voltage sensing points are connected to input pins VSP and VSN of the differential

Share Feedback
Your Opinion Matters

voltage−sense amplifier via a resistor network composed by RVS1, RVS2, and RVS3.

In most of cases, RVS3 = 0 Ω or 100 Ω. To have enough operation headroom for the input pins of the differential amplifier, usually the input voltage VSP−VSN is designed to be not higher than 2.5 V. If V_{OUT} > 2.5 V, VSP−VSN is divided down to be 2.5 V by the resistor network. With a given RVS2 like 1 kΩ, then the value of RVS1 can be obtained by

$$R_{VS1} = \frac{(V_{OUT} - 2.5) \cdot R_{VS2}}{2.5} - R_{VS3} \quad \text{(eq. 7)}$$

If VOUT ≤ 2.5 V, RVS1 = 0 Ω and RVS2 can be left open.

DIFFOUT pin, the output of the differential amplifier, is fed to FB pin of the error amplifier in the same channel. The resistance of RFB1 between DIFFOUT and FB can be selected in a range from 500 Ω to 50 kΩ having a typical value of 10 kΩ. The resistance of RFB2 from FB to GND can be calculated by

$$R_{FB2} = \frac{0.6 \cdot R_{FB1}}{V_{OUT} \cdot \frac{R_{VS2}}{R_{VS1} + R_{VS2} + R_{VS3}} - 0.6} \quad \text{(eq. 8)}$$

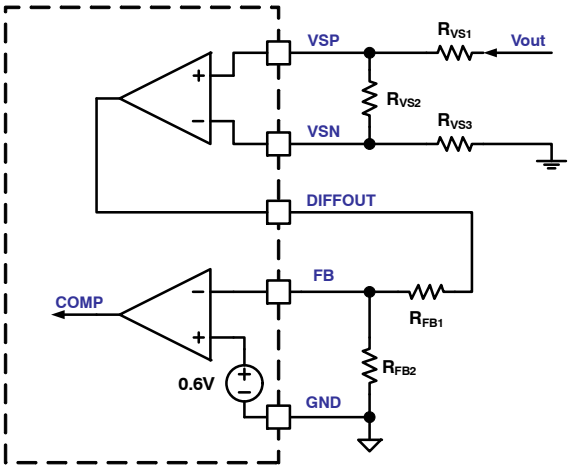

Figure 15. Output Voltage Sensing and Regulation

Over Voltage Protection (OVP)

A two−level recoverable over voltage protection is employed in the NCP81232, which is based on voltage detection at FB pin. If FB voltage is over VOVTH_L (660 mV typical) for more than 1us, the first over voltage protection OVPL is triggered and PGOOD is pulled low. In the meanwhile, all the high−side MOSFETs are turned off and all the low−side MOSFETs are turned on. A negative current protection in low−side MOSFETs is active in this protection level, and it turns off low−side MOSFET for at least 50 ns if negative current is over the limit. However, in a worse case that FB voltage rises to be over VOVTH_H (720 mV typical) for more than 1us, the second level over voltage protection OVPH takes in charge. As same as the first level OVP, all the high−side MOSFETs are turned off and all the low−side MOSFETs are turned on, but the negative current protection is disabled. The over voltage protection can be cleared once FB voltage drops 20 mV lower than VOVTH_L, and then the system comes back to normal operation.

OVPH detection starts from the beginning of soft−start time TSS and ends in shutdown and idle time of hiccup mode caused by other protections, while OVPL detection starts after PGOOD delay (Td_PGOOD) is expired and ends at the same time as OVPH.

Under Voltage Protection (UVP)

The NCP81232 pulls PGOOD low and turns off both high−side and low−side MOSFETs once FB voltage drops below VUVTH (540 mV typical) for more than 1.5 μs. Under voltage protection operates in a hiccup mode. A normal power up sequence happens after a hiccup interval.

UVP detection starts when PGOOD delay (Td_PGOOD) is expired right after a soft start, and ends in shutdown and idle time of hiccup mode.

Over Current Protection (OCP)

The NCP81232 senses phase currents by differential current sense amplifiers and provides a cycle−by−cycle over current protection for each phase. If OCP happens in all the phases of the same channel and lasts for more than 8 times of switching cycle, the channel shuts down and enters into a hiccup mode. The channel may enter into hiccup mode sooner due to the under voltage protection in a case if the output voltage drops down very fast.

Share Feedback
Your Opinion Matters

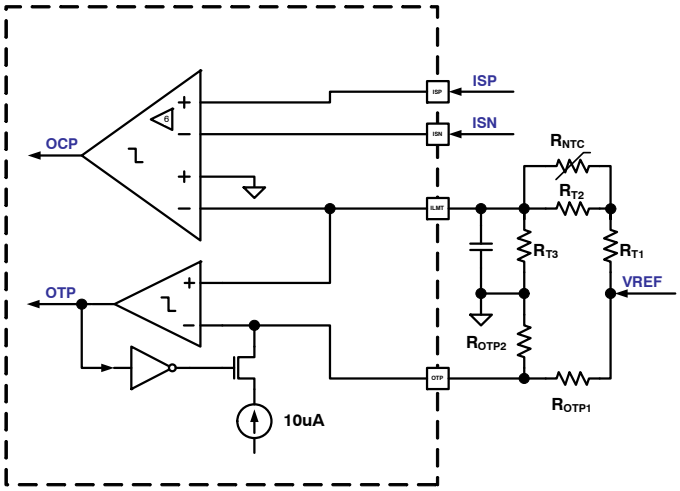

(1) OTP Configuration 1

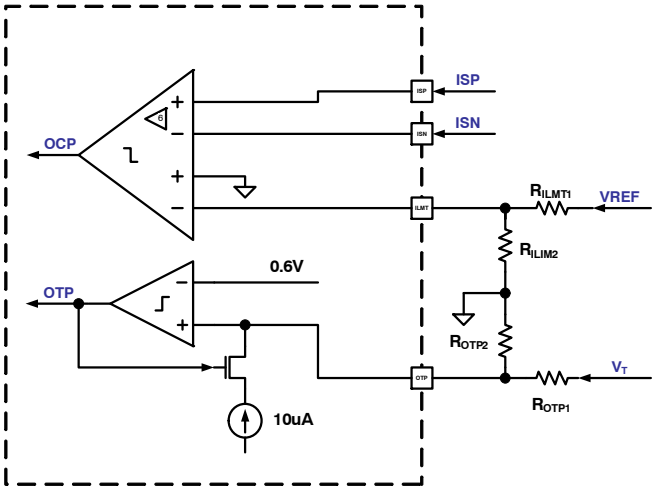

(2) OTP Configuration 2

Figure 16. Over−Current Protection and Over−Temperature Protection

The over−current threshold can be externally programmed at the ILIM pin for each channel. As shown in Figure 16 (1), a NTC resistor RNTC can be employed for temperature compensated over current protection. The peak current limit per phase can be calculated by

$$V_{ISP} - V_{ISN} = \frac{1}{6} \cdot \frac{R_{T3}}{R_{T1} + \frac{R_{T2} \cdot R_{NTC}}{R_{T2} + R_{NTC}} + R_{T3}} \cdot V_{REF} \quad \text{(eq. 9)}$$

If no temperature compensation is needed, as shown in Figure 16 (2), the peak current limit per phase can be simply set by

$$V_{ISP} - V_{ISN} = \frac{1}{6} \cdot \frac{R_{ILIM2}}{R_{ILIM1} + R_{ILIM2}} \cdot V_{REF} \quad \text{(eq. 10)}$$

OCP detection starts from the beginning of soft−start time TSS, and ends in shutdown and idle time of hiccup mode.

Over Temperature Protection (OTP)

The NCP81232 provides over temperature protection for each channel. To serve different types of DrMOS, one of two internal configurations of OTP detection can be selected at SS pin combined with a soft start time programming.

With OTP Configuration 1, as shown in Figure 16 (1), the NTC resistor RNTC senses the hot−spot temperature and changes the voltage at ILMT pin. Both over−temperature threshold and hysteresis are externally programmed at OTP pin by a resistor divider. Once the voltage at ILMT pin is higher than the voltage at OTP pin, OTP trips and the channel is shut down. The channel will have a normal start up after a hiccup interval in condition that the temperature drops below the OTP reset threshold. The OTP assertion threshold VOTP and reset threshold VOTP_RST can be calculated by

Share Feedback
Your Opinion Matters

$$V_{OTP} = \frac{V_{REF} + I_{OTP_HYS} \cdot R_{OTP1}}{1 + \frac{R_{OTP1}}{R_{OTP2}}} \quad \text{(eq. 11)}$$

$$V_{OTP_RST} = \frac{V_{REF} \cdot R_{OTP2}}{R_{OTP1} + R_{OTP2}} \quad \text{(eq. 12)}$$

The corresponding OTP temperature TOTP and reset temperature TOTP_RST can be calculated by

$$T_{OTP} = \frac{1}{\frac{\ln\left(R_{NTC}/R_{NTC}\right)}{B} + \frac{1}{25+273.15}} - 273.15 \quad \text{(eq. 13)}$$

$$T_{OTP_RST} = \frac{1}{\frac{\ln\left(R_{NTC_OTPRST}/R_{NTC}\right)}{B} + \frac{1}{25+273.15}} - 273.15 \quad \text{(eq. 14)}$$

where

$$R_{NTC_OTP} = \frac{1}{\frac{1}{R_{T_OTP} - R_{T1}} - \frac{1}{R_{T2}}} \quad \text{(eq. 15)}$$

$$R_{NTC_OTPRST} = \frac{1}{\frac{1}{R_{T_OTPRST} - R_{T1}} - \frac{1}{R_{T2}}} \quad \text{(eq. 16)}$$

$$R_{T_OTP} = \left(\frac{V_{REF}}{V_{OTP}} - 1\right) \cdot R_{T3} \quad \text{(eq. 17)}$$

$$R_{T_OTPRST} = \left(\frac{V_{REF}}{V_{OTP_RST}} - 1\right) \cdot R_{T3} \quad \text{(eq. 18)}$$

With OTP Configuration 2, as shown in Figure 16 (2), the NCP81232 receives an external signal VT linearly representing temperature and compares to an internal 0.6 V reference voltage. If the voltage is over the threshold OTP happens. The OTP assertion threshold VOTP and reset threshold VOTP_RST in this configuration can be obtained by

$$V_{T_OTP} = \left(1 + \frac{R_{OTP1}}{R_{OTP2}}\right) \cdot 0.6 \quad \text{(eq. 19)}$$

$$V_{T_OTP_RST} = \left(\frac{0.6}{R_{OTP2}} - I_{OTP_HYS}\right) \cdot R_{OTP1} + 0.6 \quad \text{(eq. 20)}$$

OTP detection starts from the beginning of soft−start time TSS, and ends in shutdown and idle time of hiccup mode.

Thermal Shutdown (TSD)

The NCP81232 has an internal thermal shutdown protection to protect the device from overheating in an extreme case that the die temperature exceeds 150°C. TSD detection is activated when VCC5V and at least one of ENs are valid. Once the thermal protection is triggered, the whole chip shuts down and all PWM signals are in high impedance. If the temperature drops below 125°C, the system automatically recovers and a normal power sequence follows.

FAULT Indicator

The NCP81232 has a comprehensive fault indicator by means of a cycle−by−cycle fault signal output from FAULT pin. Figure 17 shows a typical timing diagram of FAULT signal. FAULT signal is composed of ALEART and two portions of fault flags for the two channels, having a total cycle period of 36 μs. A corresponding fault flag is asserted to high once the fault happens. The periodic fault signal starts from the point where any fault has been confirmed and ends after PGOOD is asserted again. Note the last FAULT cycle has to be complete after PGOOD assertion.

Share Feedback
Your Opinion Matters

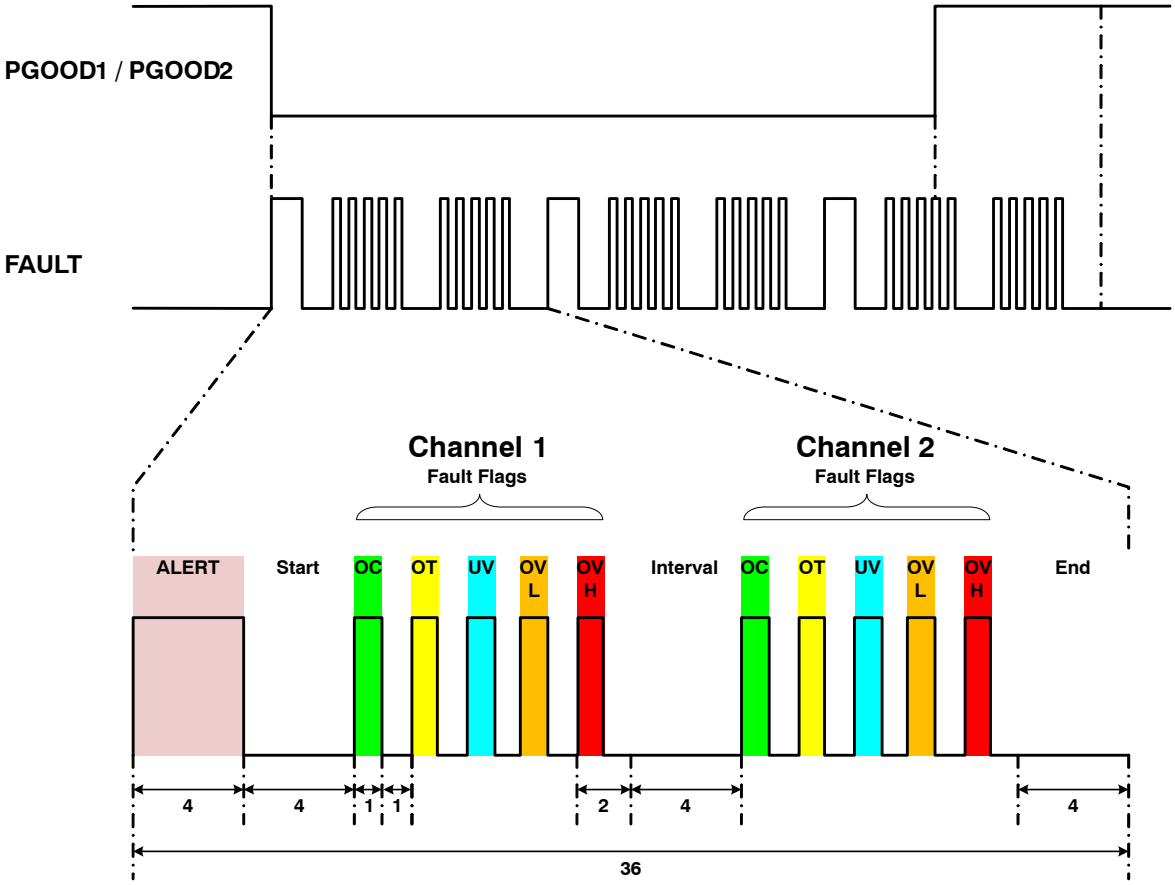

Figure 17. Timing Diagram of FAULT Signal

LAYOUT GUIDELINES

Electrical Layout Considerations

Good electrical layout is a key to make sure proper operation, high efficiency, and noise reduction. Electrical layout guidelines are:

- Power Paths: Use wide and short traces for power paths (such as VIN, VOUT, SW, and PGND) in power stages to reduce parasitic inductance and high−frequency loop area. It is also good for efficiency improvement.
- Power Supply Decoupling: The devices should be well decoupled by input capacitors and input loop area should be as small as possible to reduce parasitic inductance, input voltage spike, and noise emission. Usually, a small low−ESL MLCC is placed very close to VIN and PGND pins.
- VCC Decoupling: Place decoupling caps as close as possible to VCC5V pin of the NCP81232 and VCCP pins of DrMOS.
- Switching Node: Each SW node in power stages should be a copper pour, but compact because it is also a noise source.
- Bootstrap: The bootstrap cap and an option resistor per phase need to be very close and directly connected between bootstrap pin and SW pin of DrMOS.
- Ground: It would be good to have separated ground planes for power ground PGND and analog ground GND and connect the two planes at one point.
- Voltage Sense: Use Kelvin sense pair and arrange a “quiet” path for the differential output voltage sense. Careful layout for multi−phase locations and output capacitor distribution would help to get even voltage ripple at the voltage sensing point, and have better current balance as well.
- Current Sense: Use Kelvin sense pair and arrange a “quiet” path for the differential current sense per phase. Careful layout for current sensing is critical for jitter minimization, accurate current limiting, and good current balance. The current−sense filter capacitors and resistors should be close to the controller. The temperature compensating thermistor should be placed as close as possible to the inductor. The wiring path should be kept as short as possible but well away from the switch nodes.
- Compensation Network: The small feedback capacitor from COMP to FB should be as close to the controller as possible. Keep the FB traces short to minimize their capacitance to ground.

Share Feedback
Your Opinion Matters

Thermal Layout Considerations

Good thermal layout helps high power dissipation from a small package with reduced temperature rise. Thermal layout guidelines are:

- The exposed pads must be well soldered on the board.
- A four or more layers PCB board with solid ground planes is preferred for better heat dissipation.
- More free vias are welcome to be around DrMOS and underneath the exposed pads to connect the inner ground layers to reduce thermal impedance.
- Use large area copper pour to help thermal conduction and radiation.
- Do not put the inductor to be too close to the DrMOS, thus the heat sources are decentralized.

Share Feedback
Your Opinion Matters

QFN40 5x5, 0.4P
CASE 485CR
ISSUE C

DATE 27 AUG 2013

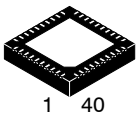

SCALE 2:1

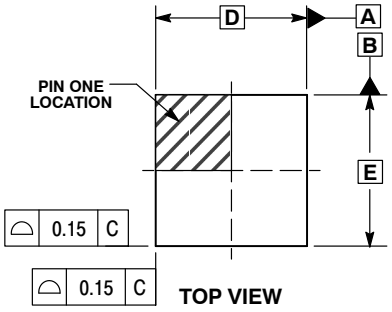

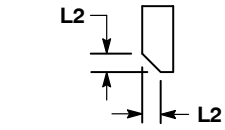

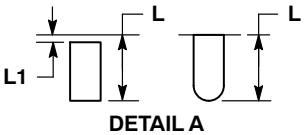

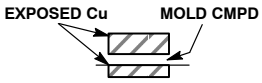

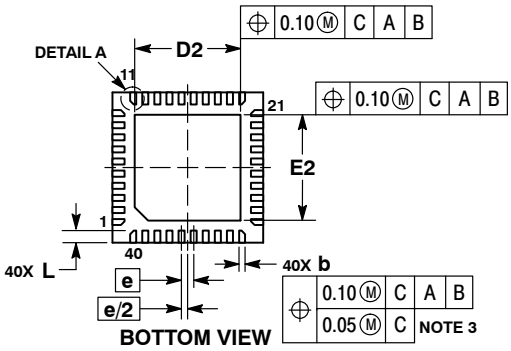

RECOMMENDED SOLDERING FOOTPRINT

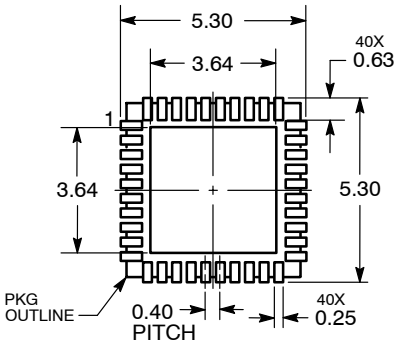

DIMENSIONS: MILLIMETERS

NOTES:
1. DIMENSIONING AND TOLERANCING PER ASME Y14.5M, 1994.
2. CONTROLLING DIMENSIONS: MILLIMETERS.
3. DIMENSION b APPLIES TO PLATED TERMINAL AND IS MEASURED BETWEEN 0.15 AND 0.30mm FROM THE TERMINAL TIP.
4. COPLANARITY APPLIES TO THE EXPOSED PAD AS WELL AS THE TERMINALS.

	MILLIMETERS	
DIM	MIN	MAX
A	0.80	1.00
A1	---	0.05
A3	0.20 REF	
b	0.15	0.25
D	5.00 BSC	
D2	3.40	3.60
E	5.00 BSC	
E2	3.40	3.60
e	0.40 BSC	
L	0.30	0.50
L1	---	0.15
L2	0.12 REF	

GENERIC MARKING DIAGRAM*

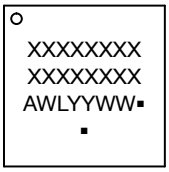

XXXXX = Specific Device Code
A = Assembly Location
WL = Wafer Lot
YY = Year
WW = Work Week
▪ = Pb−Free Package

(Note: Microdot may be in either location)

*This information is generic. Please refer to device data sheet for actual part marking.
Pb−Free indicator, “G” or microdot “ ▪”, may or may not be present.

DOCUMENT NUMBER:	**98AON83971E**	Electronic versions are uncontrolled except when accessed directly from the Document Repository. Printed versions are uncontrolled except when stamped “CONTROLLED COPY” in red.	
DESCRIPTION:	**QFN40, 5x5, 0.4P**		**PAGE 1 OF 1**

onsemi and onsemi are trademarks of Semiconductor Components Industries, LLC dba **onsemi** or its subsidiaries in the United States and/or other countries. **onsemi** reserves the right to make changes without further notice to any products herein. **onsemi** makes no warranty, representation or guarantee regarding the suitability of its products for any particular purpose, nor does **onsemi** assume any liability arising out of the application or use of any product or circuit, and specifically disclaims any and all liability, including without limitation special, consequential or incidental damages. **onsemi** does not convey any license under its patent rights nor the rights of others.

© Semiconductor Components Industries, LLC, 2012

onsemi, , and other names, marks, and brands are registered and/or common law trademarks of Semiconductor Components Industries, LLC dba "**onsemi**" or its affiliates and/or subsidiaries in the United States and/or other countries. **onsemi** owns the rights to a number of patents, trademarks, copyrights, trade secrets, and other intellectual property. A listing of **onsemi**'s product/patent coverage may be accessed at www.onsemi.com/site/pdf/Patent−Marking.pdf. **onsemi** reserves the right to make changes at any time to any products or information herein, without notice. The information herein is provided "as−is" and **onsemi** makes no warranty, representation or guarantee regarding the accuracy of the information, product features, availability, functionality, or suitability of its products for any particular purpose, nor does **onsemi** assume any liability arising out of the application or use of any product or circuit, and specifically disclaims any and all liability, including without limitation special, consequential or incidental damages. Buyer is responsible for its products and applications using **onsemi** products, including compliance with all laws, regulations and safety requirements or standards, regardless of any support or applications information provided by **onsemi**. "Typical" parameters which may be provided in **onsemi** data sheets and/or specifications can and do vary in different applications and actual performance may vary over time. All operating parameters, including "Typicals" must be validated for each customer application by customer's technical experts. **onsemi** does not convey any license under any of its intellectual property rights nor the rights of others. **onsemi** products are not designed, intended, or authorized for use as a critical component in life support systems or any FDA Class 3 medical devices or medical devices with a same or similar classification in a foreign jurisdiction or any devices intended for implantation in the human body. Should Buyer purchase or use **onsemi** products for any such unintended or unauthorized application, Buyer shall indemnify and hold **onsemi** and its officers, employees, subsidiaries, affiliates, and distributors harmless against all claims, costs, damages, and expenses, and reasonable attorney fees arising out of, directly or indirectly, any claim of personal injury or death associated with such unintended or unauthorized use, even if such claim alleges that **onsemi** was negligent regarding the design or manufacture of the part. **onsemi** is an Equal Opportunity/Affirmative Action Employer. This literature is subject to all applicable copyright laws and is not for resale in any manner.

ADDITIONAL INFORMATION

TECHNICAL PUBLICATIONS:
Technical Library: www.onsemi.com/design/resources/technical−documentation
onsemi Website: www.onsemi.com

ONLINE SUPPORT: www.onsemi.com/support
For additional information, please contact your local Sales Representative at www.onsemi.com/support/sales