Octal D-Type Flip-Flop with Clear

MM74HCT273

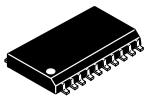

SOIC-20 WB
CASE 751D-05

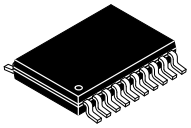

TSSOP-20 WB
CASE 948E

General Description

The MM74HCT273 utilizes advanced silicon-gate CMOS technology. It has an input threshold and output drive similar to LS-TTL with the low standby power of CMOS.

These positive edge-triggered flip-flops have a common clock and clear-independent Q outputs. Data on a D input, having the specified set-up and hold time, is transferred to the corresponding Q output on the positive-going transition of the clock pulse. The asynchronous clear forces all outputs LOW when it is LOW.

All inputs to this device are protected from damage due to electrostatic discharge by diodes to V_{CC} and ground.

MM74HCT devices are intended to interface TTL and NMOS components to CMOS components. These parts can be used as plug-in replacements to reduce system power consumption in existing designs.

Features

- Typical Propagation Delay: 18 ns
- Low Quiescent Current: 160 μA Maximum (74HCT Series)
- Fanout of 10 LS-TTL Loads
- This is a Pb-Free Device

Connection Diagram

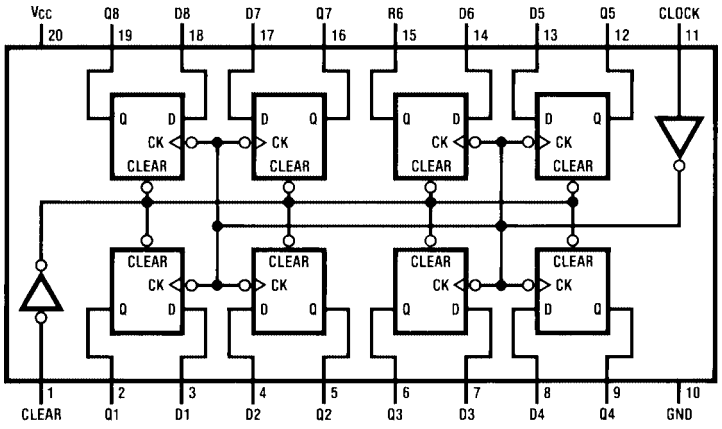

Top View

Figure 1. Pin Assignments for SOIC and TSSOP

MARKING DIAGRAM

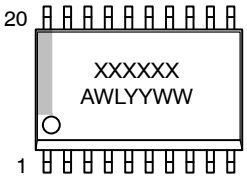

SOIC-20

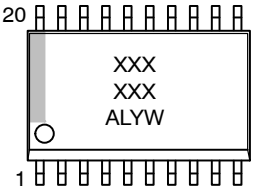

TSSOP-20 WB

XXXXXX	= Specific Device Code
A	= Assembly Location
WL, L	= Wafer Lot
YY, Y	= Year
WW, W	= Work Week

ORDERING INFORMATION

See detailed ordering and shipping information on page 6 of this data sheet.

© Semiconductor Components Industries, LLC, 1984

TRUTH TABLE (Each Flip-Flop)

Inputs			Outputs
Clear	**Clock**	**D**	**Q**
L	X	X	L
H	↑	H	H
H	↑	L	L
H	L	X	Q0

NOTE: H = HIGH Level (steady-state)
L = LOW Level (steady-state)
X = Don't Care
↑ = Transition from LOW-to-HIGH level
Q0 = The level of Q before the indicated steady-state input conditions were established.

Logic Diagram

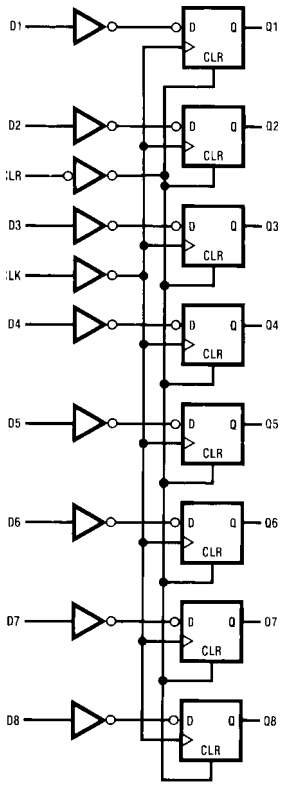

Figure 2. Logic Diagram

Share Feedback
Your Opinion Matters

ABSOLUTE MAXIMUM RATINGS (Note 1)

Symbol	Parameter	Rating	Unit
V_{CC}	Supply Voltage	−0.5 to +6.5	V
V_{IN}	DC Input Voltage	−0.5 to V_{CC} + 0.5	V
V_{OUT}	DC Output Voltage	−0.5 to V_{CC} + 0.5	V
I_{IK}, I_{OK}	Clamp Diode Current	±20	mA
I_{OUT}	DC Output Current, per Pin	±25	mA
I_{CC}	DC V_{CC} or GND Current, per Pin	±50	mA
T_{STG}	Storage Temperature Range	−65 to +150	°C
P_D	Power Dissipation SOIC TSSOP	1302 833	mW
T_L	Lead Temperature (Soldering 10 Seconds)	260	°C

Stresses exceeding those listed in the Maximum Ratings table may damage the device. If any of these limits are exceeded, device functionality should not be assumed, damage may occur and reliability may be affected.

1. Unless otherwise specified all voltages are referenced to ground.

RECOMMENDED OPERATING CONDITIONS

Symbol	Parameter	Min	Max	Unit
V_{CC}	Supply Voltage	4.5	5.5	V
V_{IN}, V_{OUT}	DC Input or Output Voltage	0	V_{CC}	V
T_A	Operating Temperature Range	−55	+125	°C
t_r, t_f	Input Rise or Fall Times		500	ns

Functional operation above the stresses listed in the Recommended Operating Ranges is not implied. Extended exposure to stresses beyond the Recommended Operating Ranges limits may affect device reliability.

Share Feedback
Your Opinion Matters

DC ELECTRICAL CHARACTERISTICS (V_{CC} = 5 V ± 10%, unless otherwise specified)

Symbol	Parameter	Conditions	T_A = 25°C	T_A = −40 °C to 85 °C	T_A = −55 °C to 125 °C	Unit
			Typ	Guaranteed Limits		
V_{IH}	Minimum HIGH Level Input Voltage		–	2.0	2.0	2.0	V
V_{IL}	Maximum LOW Level Input Voltage		–	0.8	0.8	0.8	V
V_{OH}	Minimum HIGH Level Output Voltage	V_{IN} = V_{IH} or V_{IL} $\|I_{OUT}\|$ = 20 μA	V_{CC}	V_{CC} – 0.1	V_{CC} – 0.1	V_{CC} – 0.1	V
		V_{IN} = V_{IH} or V_{IL} $\|I_{OUT}\|$ = 4.0 mA, V_{CC} = 4.5 V	4.2	3.98	3.84	3.7	V
		V_{IN} = V_{IH} or V_{IL} $\|I_{OUT}\|$ = 4.8 mA, V_{CC} = 5.5 V	5.2	4.98	4.84	4.7	V
V_{OL}	Minimum LOW Level Voltage	V_{IN} = V_{IH} or V_{IL} $\|I_{OUT}\|$ = 20 μA	0	0.1	0.1	0.1	V
		V_{IN} = V_{IH} or V_{IL} $\|I_{OUT}\|$ = 4.0 mA, V_{CC} = 4.5 V	0.2	0.26	0.33	0.4	V
		V_{IN} = V_{IH} or V_{IL} $\|I_{OUT}\|$ = 4.8 mA, V_{CC} = 5.5 V	0.2	0.26	0.33	0.4	V
I_{IN}	Maximum Input Current	V_{IN} = V_{CC} or GND, V_{IH} or V_{IL}	–	±0.1	±1.0	±1.0	μA
I_{CC}	Maximum Quiescent Supply Current	V_{IN} = V_{CC} or GND, I_{OUT} = 0 μA	–	8	80	160	μA
		V_{IN} = 2.4 V or 0.5 V (Note 2)	–	1.2	1.4	1.5	mA

Product parametric performance is indicated in the Electrical Characteristics for the listed test conditions, unless otherwise noted. Product performance may not be indicated by the Electrical Characteristics if operated under different conditions.

2. Measured per pin, all other inputs held at V_{CC} or GND.

Share Feedback
Your Opinion Matters

AC ELECTRICAL CHARACTERISTICS (V_{CC} = 5 V, T_A = 25 °C, C_L = 15 pF, $t_r = t_f$ = 6 ns)

Symbol	Parameter	Conditions	Typ	Guaranteed Limit	Unit
f_{MAX}	Maximum Operating Frequency		68	30	MHz
t_{PHL}, t_{PLH}	Maximum Propagation Delay from Clock to Q		18	30	ns
t_{PHL}, t_{PLH}	Maximum Propagation Delay from Clear to Q		21	30	ns
t_{REM}	Minimum Removal Time, Clear to Clock		−1	5	ns
t_S	Minimum Set-Up Time D to Clock		6	20	ns
t_H	Minimum Hold Time Clock to D		−3	5	ns
t_W	Minimum Pulse Width Clock or Clear		10	16	ns

Product parametric performance is indicated in the Electrical Characteristics for the listed test conditions, unless otherwise noted. Product performance may not be indicated by the Electrical Characteristics if operated under different conditions.

AC ELECTRICAL CHARACTERISTICS (V_{CC} = 5.0 V ± 10%, C_L = 50 pF, $t_r = t_f$ = 6 ns (unless otherwise specified))

Symbol	Parameter	Conditions	T_A = 25 °C	T_A = −40 °C to 85 °C	T_A = −55 °C to 125 °C		Unit
			Typ	Guaranteed Limits			
f_{MAX}	Maximum Operating Frequency		68	27	21	18	MHz
t_{PHL}, t_{PLH}	Maximum Propagation Delay from Clock to Q		22	37	46	56	ns
t_{PHL}, t_{PLH}	Maximum Propagation Delay from Clear to Q		25	35	44	52	ns
t_{REM}	Minimum Removal Time Clear to Clock		−1	5	6	7	ns
t_S	Minimum Set-Up Time D to Clock		6	20	25	30	ns
t_H	Minimum Hold Time Clock to D		−3	5	5	5	ns
t_W	Minimum Pulse Width Clock or Clear		10	16	25	30	ns
t_r, t_f	Maximum Input Rise and Fall Time, Clock		–	500	500	500	ns
t_{THL}, t_{TLH}	Maximum Output Rise and Fall Time		11	15	19	22	ns
C_{PD}	Power Dissipation Capacitance (Note 3)	(Per Flip-Flop)	50	–	–	–	pF
C_{IN}	Maximum Input Capacitance		6	10	10	10	pF

Product parametric performance is indicated in the Electrical Characteristics for the listed test conditions, unless otherwise noted. Product performance may not be indicated by the Electrical Characteristics if operated under different conditions.

3. C_{PD} determines the no load dynamic power consumption, $P_D = C_{PD}\ V_{CC}^2\ f + I_{CC}\ V_{CC}$, and the no load dynamic current consumption, $I_S = C_{PD}\ V_{CC}^2\ f + I_{CC}$.

Share Feedback
Your Opinion Matters

ORDERING INFORMATION

Part Number	Marking	Package	Shipping†
MM74HCT273WM	HCT273A	SOIC-20 WB, Case 751D-05 (Pb-Free and Halide-Free)	38 Units / Tube
MM74HCT273WMX	HCT273A		1000 / Tape & Reel
MM74HCT273MTC	HCT 273A	TSSOP-20 WB, Case 948E (Pb-Free)	75 Units / Tube
MM74HCT273MTCX	HCT 273A		2500 / Tape & Reel

† For information on tape and reel specifications, including part orientation and tape sizes, please refer to our Tape and Reel Packaging Specifications Brochure, BRD8011/D.

Share Feedback
Your Opinion Matters

SOIC−20 WB
CASE 751D−05
ISSUE H

DATE 22 APR 2015

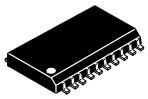

SCALE 1:1

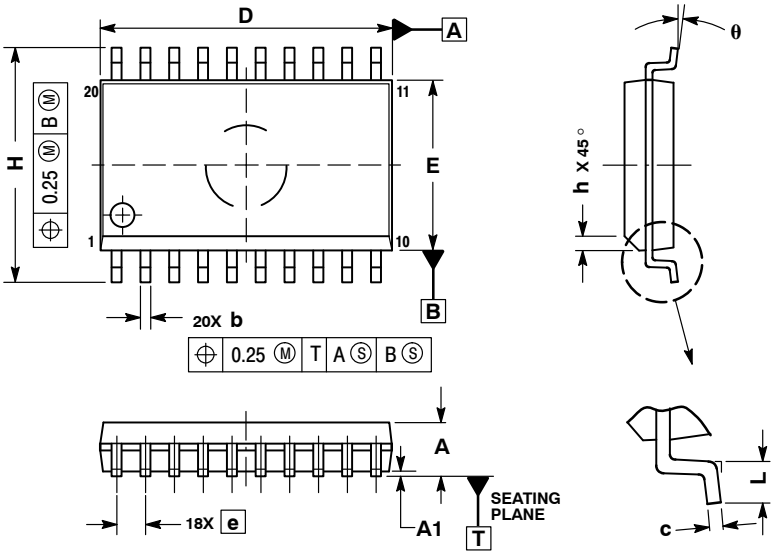

NOTES:
1. DIMENSIONS ARE IN MILLIMETERS.
2. INTERPRET DIMENSIONS AND TOLERANCES PER ASME Y14.5M, 1994.
3. DIMENSIONS D AND E DO NOT INCLUDE MOLD PROTRUSION.
4. MAXIMUM MOLD PROTRUSION 0.15 PER SIDE.
5. DIMENSION B DOES NOT INCLUDE DAMBAR PROTRUSION. ALLOWABLE PROTRUSION SHALL BE 0.13 TOTAL IN EXCESS OF B DIMENSION AT MAXIMUM MATERIAL CONDITION.

	MILLIMETERS	
DIM	MIN	MAX
A	2.35	2.65
A1	0.10	0.25
b	0.35	0.49
c	0.23	0.32
D	12.65	12.95
E	7.40	7.60
e	1.27 BSC	
H	10.05	10.55
h	0.25	0.75
L	0.50	0.90
θ	0°	7°

RECOMMENDED SOLDERING FOOTPRINT*

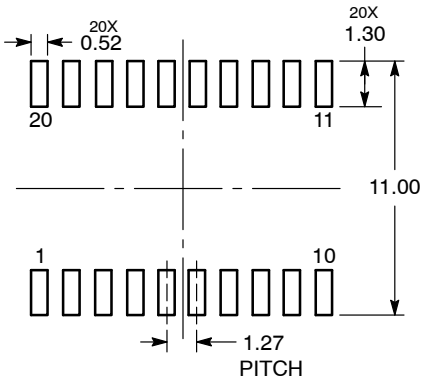

DIMENSIONS: MILLIMETERS

*For additional information on our Pb−Free strategy and soldering details, please download the **onsemi** Soldering and Mounting Techniques Reference Manual, SOLDERRM/D.

GENERIC MARKING DIAGRAM*

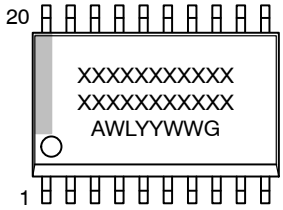

XXXXX = Specific Device Code
A = Assembly Location
WL = Wafer Lot
YY = Year
WW = Work Week
G = Pb−Free Package

*This information is generic. Please refer to device data sheet for actual part marking. Pb−Free indicator, “G” or microdot “▪”, may or may not be present. Some products may not follow the Generic Marking.

DOCUMENT NUMBER:	**98ASB42343B**	Electronic versions are uncontrolled except when accessed directly from the Document Repository. Printed versions are uncontrolled except when stamped “CONTROLLED COPY” in red.	
DESCRIPTION:	**SOIC−20 WB**		**PAGE 1 OF 1**

onsemi and onsemi are trademarks of Semiconductor Components Industries, LLC dba **onsemi** or its subsidiaries in the United States and/or other countries. **onsemi** reserves the right to make changes without further notice to any products herein. **onsemi** makes no warranty, representation or guarantee regarding the suitability of its products for any particular purpose, nor does **onsemi** assume any liability arising out of the application or use of any product or circuit, and specifically disclaims any and all liability, including without limitation special, consequential or incidental damages. **onsemi** does not convey any license under its patent rights nor the rights of others.

onsemi, , and other names, marks, and brands are registered and/or common law trademarks of Semiconductor Components Industries, LLC dba "**onsemi**" or its affiliates and/or subsidiaries in the United States and/or other countries. **onsemi** owns the rights to a number of patents, trademarks, copyrights, trade secrets, and other intellectual property. A listing of **onsemi**'s product/patent coverage may be accessed at www.onsemi.com/site/pdf/Patent−Marking.pdf. **onsemi** reserves the right to make changes at any time to any products or information herein, without notice. The information herein is provided "as−is" and **onsemi** makes no warranty, representation or guarantee regarding the accuracy of the information, product features, availability, functionality, or suitability of its products for any particular purpose, nor does **onsemi** assume any liability arising out of the application or use of any product or circuit, and specifically disclaims any and all liability, including without limitation special, consequential or incidental damages. Buyer is responsible for its products and applications using **onsemi** products, including compliance with all laws, regulations and safety requirements or standards, regardless of any support or applications information provided by **onsemi**. "Typical" parameters which may be provided in **onsemi** data sheets and/or specifications can and do vary in different applications and actual performance may vary over time. All operating parameters, including "Typicals" must be validated for each customer application by customer's technical experts. **onsemi** does not convey any license under any of its intellectual property rights nor the rights of others. **onsemi** products are not designed, intended, or authorized for use as a critical component in life support systems or any FDA Class 3 medical devices or medical devices with a same or similar classification in a foreign jurisdiction or any devices intended for implantation in the human body. Should Buyer purchase or use **onsemi** products for any such unintended or unauthorized application, Buyer shall indemnify and hold **onsemi** and its officers, employees, subsidiaries, affiliates, and distributors harmless against all claims, costs, damages, and expenses, and reasonable attorney fees arising out of, directly or indirectly, any claim of personal injury or death associated with such unintended or unauthorized use, even if such claim alleges that **onsemi** was negligent regarding the design or manufacture of the part. **onsemi** is an Equal Opportunity/Affirmative Action Employer. This literature is subject to all applicable copyright laws and is not for resale in any manner.

ADDITIONAL INFORMATION

TECHNICAL PUBLICATIONS:
Technical Library: www.onsemi.com/design/resources/technical−documentation
onsemi Website: www.onsemi.com

ONLINE SUPPORT: www.onsemi.com/support
For additional information, please contact your local Sales Representative at www.onsemi.com/support/sales