# Hex Non-Inverting 3-State Buffer

# MC14503B

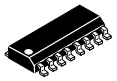

1

**SOIC-16**
**D SUFFIX**
**CASE 751B**

The MC14503B is a hex non-inverting buffer with 3-state outputs, and a high current source and sink capability. The 3-state outputs make it useful in common bussing applications. Two disable controls are provided. A high level on the Disable A input causes the outputs of buffers 1 through 4 to go into a high impedance state and a high level on the Disable B input causes the outputs of buffers 5 and 6 to go into a high impedance state.

### Features

- 3-State Outputs
- TTL Compatible − Will Drive One TTL Load Over Full Temperature Range
- Supply Voltage Range = 3.0 Vdc to 18 Vdc
- Two Disable Controls for Added Versatility
- Pin for Pin Replacement for MM80C97 and 340097
- NLV Prefix for Automotive and Other Applications Requiring Unique Site and Control Change Requirements; AEC-Q100 Qualified and PPAP Capable
- This Device is Pb-Free and is RoHS Compliant

### PIN ASSIGNMENT

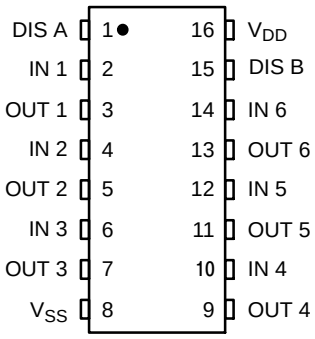


### MARKING DIAGRAM




A = Assembly Location
WL, L = Wafer Lot
YY, Y = Year
WW, W = Work Week
G = Pb-Free Package

### MAXIMUM RATINGS (Voltages Referenced to $V_{SS}$) (Note 1)

| Parameter | Symbol | Value | Unit |
|---|---|---|---|
| DC Supply Voltage Range | $V_{DD}$ | −0.5 to +18.0 | V |
| Input or Output Voltage Range (DC or Transient) | $V_{in}$, $V_{out}$ | −0.5 to $V_{DD}$ + 0.5 | V |
| Input Current (DC or Transient) per Pin | $I_{in}$ | ±10 | mA |
| Output Current (DC or Transient) per Pin | $I_{out}$ | ±25 | mA |
| Power Dissipation, per Package (Note 2) | $P_D$ | 500 | mW |
| Ambient Temperature Range | $T_A$ | −55 to +125 | °C |
| Storage Temperature Range | | −65 to +150 | °C |
| Lead Temperature (8-Second Soldering) | | 260 | °C |

Stresses exceeding those listed in the Maximum Ratings table may damage the device. If any of these limits are exceeded, device functionality should not be assumed, damage may occur and reliability may be affected. Operating the device outside its recommended conditions, but still within its maximum rated limits may not cause immediate damage. However, doing so can lead to reduced performance, unpredictable behavior, and potentially shorten the device's lifespan or reliability.

1. Maximum Ratings are those values beyond which damage to the device may occur.
2. Temperature Derating:
   "D/DW" Package: –7.0 mW/°C From 65 °C To 125 °C

This device contains protection circuitry to guard against damage due to high static voltages or electric fields. However, precautions must be taken to avoid applications of any voltage higher than maximum rated voltages to this high-impedance circuit. For proper operation, $V_{in}$ and $V_{out}$ should be constrained to the range $V_{SS} \le (V_{in}$ or $V_{out}) \le V_{DD}$.

Unused inputs must always be tied to an appropriate logic voltage level (e.g., either $V_{SS}$ or $V_{DD}$). Unused outputs must be left open.

### TRUTH TABLE

| $In_n$ | Appropriate Disable Input | $Out_n$ |
|---|---|---|
| 0 | 0 | 0 |
| 1 | 0 | 1 |
| X | 1 | High Impedance |

X = Don't Care

### ORDERING INFORMATION

See detailed ordering and shipping information in the package dimensions section on page 4 of this data sheet.

© Semiconductor Components Industries, LLC, 2014

## LOGIC DIAGRAM

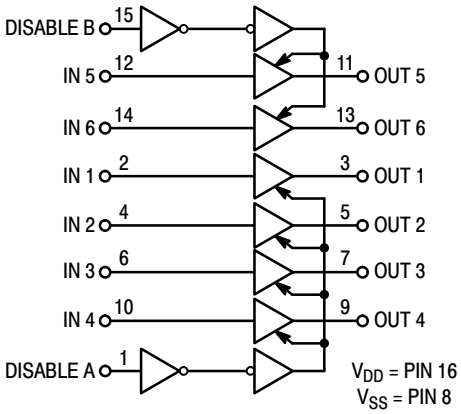


## CIRCUIT DIAGRAM

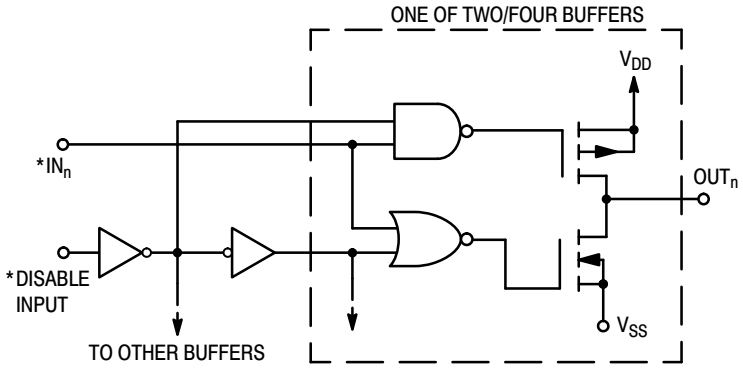


* Diode protection on all inputs (not shown)

**ELECTRICAL CHARACTERISTICS** (Voltages Referenced to $V_{SS}$)

| Characteristic | Symbol | $V_{DD}$ Vdc | −55 °C Min | −55 °C Max | 25 °C Min | 25 °C Typ (Note 3) | 25 °C Max | 125 °C Min | 125 °C Max | Unit |
|---|---|---|---|---|---|---|---|---|---|---|
| Output Voltage “0” Level $V_{in}$ = 0 | $V_{OL}$ | 5.0 | – | 0.05 | – | 0 | 0.05 | – | 0.05 | Vdc |
| | | 10 | – | 0.05 | – | 0 | 0.05 | – | 0.05 | |
| | | 15 | – | 0.05 | – | 0 | 0.05 | – | 0.05 | |
| “1” Level $V_{in}$ = $V_{DD}$ | $V_{OH}$ | 5.0 | 4.95 | – | 4.95 | 5.0 | – | 4.95 | – | Vdc |
| | | 10 | 9.95 | – | 9.95 | 10 | – | 9.95 | – | |
| | | 15 | 14.95 | – | 14.95 | 15 | – | 14.95 | – | |
| Input Voltage “0” Level ($V_O$ = 3.6 or 1.4 Vdc) | $V_{IL}$ | 5.0 | – | 1.5 | – | 2.25 | 1.5 | – | 1.5 | Vdc |
| ($V_O$ = 7.2 or 2.8 Vdc) | | 10 | – | 3.0 | – | 4.50 | 3.0 | – | 3.0 | |
| ($V_O$ = 11.5 or 3.5 Vdc) | | 15 | – | 4.0 | – | 6.75 | 4.0 | – | 4.0 | |
| “1” Level ($V_O$ = 1.4 or 3.6 Vdc) | $V_{IH}$ | 5.0 | 3.5 | – | 3.5 | 2.75 | – | 3.5 | – | Vdc |
| ($V_O$ = 2.8 or 7.2 Vdc) | | 10 | 7.0 | – | 7.0 | 5.50 | – | 7.0 | – | |
| ($V_O$ = 3.5 or 11.5 Vdc) | | 15 | 11 | – | 11 | 8.25 | – | 11 | – | |
| Output Drive Current ($V_{OH}$ = 2.5 Vdc) Source | $I_{OH}$ | 4.5 | –4.3 | – | –3.6 | –5.0 | – | –2.5 | – | mAdc |
| ($V_{OH}$ = 2.5 Vdc) | | 5.0 | –5.8 | – | –4.8 | –6.1 | – | –3.0 | – | |
| ($V_{OH}$ = 4.6 Vdc) | | 5.0 | –1.2 | – | –1.02 | –1.4 | – | –0.7 | – | |
| ($V_{OH}$ = 9.5 Vdc) | | 10 | –3.1 | – | –2.6 | –3.7 | – | –1.8 | – | |
| ($V_{OH}$ = 13.5 Vdc) | | 15 | –8.2 | – | –6.8 | –14.1 | – | –4.8 | – | |
| ($V_{OL}$ = 0.4 Vdc) Sink | $I_{OL}$ | 4.5 | 2.2 | – | 1.8 | 2.1 | – | 1.2 | – | mAdc |
| ($V_{OL}$ = 0.4 Vdc) | | 5.0 | 2.6 | – | 2.1 | 2.3 | – | 1.3 | – | |
| ($V_{OL}$ = 0.5 Vdc) | | 10 | 6.5 | – | 5.5 | 6.2 | – | 3.8 | – | |
| ($V_{OL}$ = 1.5 Vdc) | | 15 | 19.2 | – | 16.1 | 25 | – | 11.2 | – | |
| Input Current | $I_{in}$ | 15 | – | ±0.1 | – | ±0.00001 | ±0.1 | – | ±1.0 | μAdc |
| Input Capacitance, ($V_{in}$ = 0) | $C_{in}$ | – | – | – | – | 5.0 | 7.5 | – | – | pF |
| Quiescent Current, (Per Package) | $I_Q$ | 5.0 | – | 1.0 | – | 0.002 | 1.0 | – | 30 | μAdc |
| | | 10 | – | 2.0 | – | 0.004 | 2.0 | – | 60 | |
| | | 15 | – | 4.0 | – | 0.006 | 4.0 | – | 120 | |
| Total Supply Current (Note 4, 5) (Dynamic plus Quiescent, Per Package) ($C_L$ = 50 pF on all outputs) (All outputs switching, 50% Duty Cycle) | $I_T$ | 5.0 | $I_T$ = (2.5 μA/kHz) f + $I_{DD}$ | | | | | | | μAdc |
| | | 10 | $I_T$ = (6.0 μA/kHz) f + $I_{DD}$ | | | | | | | |
| | | 15 | $I_T$ = (10 μA/kHz) f + $I_{DD}$ | | | | | | | |
| 3-State Output Leakage Current | $I_{TL}$ | 15 | – | ±0.1 | – | ±0.0001 | ±0.1 | – | ±3.0 | μAdc |

Product parametric performance is indicated in the Electrical Characteristics for the listed test conditions, unless otherwise noted. Product performance may not be indicated by the Electrical Characteristics if operated under different conditions.

3. Data labelled “Typ” is not to be used for design purposes but is intended as an indication of the IC’s potential performance.
4. The formulas given are for the typical characteristics only at 25 °C.
5. To calculate total supply current at loads other than 50 pF: $I_T(C_L) = I_T(50\ pF) + (C_L - 50)$ Vfk where: $I_T$ is in μA (per package), $C_L$ in pF, V = ($V_{DD}$ – $V_{SS}$) in volts, f in kHz is input frequency, and k = 0.006.



Share Feedback
Your Opinion Matters

**SWITCHING CHARACTERISTICS** (Note 6) ($C_L$ = 50 pF, $T_A$ = 25 °C)

| Characteristic | Symbol | $V_{DD}$ $V_{CC}$ | All Types | | Unit |
|---|---|---|---|---|---|
| | | | Typ (Note 7) | Max | |
| Output Rise Time<br>$t_{TLH}$ = (0.5 ns/pF) $C_L$ + 20 ns<br>$t_{TLH}$ = (0.3 ns/pF) $C_L$ + 8.0 ns<br>$t_{TLH}$ = (0.2 ns/pF) $C_L$ + 8.0 ns | $t_{TLH}$ | <br>5.0<br>10<br>15 | <br>45<br>23<br>18 | <br>90<br>45<br>35 | ns |
| Output Fall Time<br>$t_{THL}$ = (0.5 ns/pF) $C_L$ + 20 ns<br>$t_{THL}$ = (0.3 ns/pF) $C_L$ + 8.0 ns<br>$t_{THL}$ = (0.2 ns/pF) $C_L$ + 8.0 ns | $t_{THL}$ | <br>5.0<br>10<br>15 | <br>45<br>23<br>18 | <br>90<br>45<br>35 | ns |
| Turn-Off Delay Time, all Outputs<br>$t_{PLH}$ = (0.3 ns/pF) $C_L$ + 60 ns<br>$t_{PLH}$ = (0.15 ns/pF) $C_L$ + 27 ns<br>$t_{PLH}$ = (0.1 ns/pF) $C_L$ + 20 ns | $t_{PLH}$ | <br>5.0<br>10<br>15 | <br>75<br>35<br>25 | <br>150<br>70<br>50 | ns |
| Turn-On Delay Time, all Outputs<br>$t_{PHL}$ = (0.3 ns/pF) $C_L$ + 60 ns<br>$t_{PHL}$ = (0.15 ns/pF) $C_L$ + 27 ns<br>$t_{PHL}$ = (0.1 ns/pF) $C_L$ + 20 ns | $t_{PHL}$ | <br>5.0<br>10<br>15 | <br>75<br>35<br>25 | <br>150<br>70<br>50 | ns |
| 3-State Propagation Delay Time<br>Output “1” to High Impedance | $t_{PHZ}$ | 5.0<br>10<br>15 | 75<br>40<br>35 | 150<br>80<br>70 | ns |
| Output “0” to High Impedance | $t_{PLZ}$ | 5.0<br>10<br>15 | 80<br>40<br>35 | 160<br>80<br>70 | ns |
| High Impedance to “1” Level | $t_{PZH}$ | 5.0<br>10<br>15 | 65<br>25<br>20 | 130<br>50<br>40 | ns |
| High Impedance to “0” Level | $t_{PZL}$ | 5.0<br>10<br>15 | 100<br>35<br>25 | 200<br>70<br>50 | ns |

6. The formulas given are for the typical characteristics only at 25 °C.
7. Data labelled “Typ” is not to be used for design purposes but is intended as an indication of the IC’s potential performance.

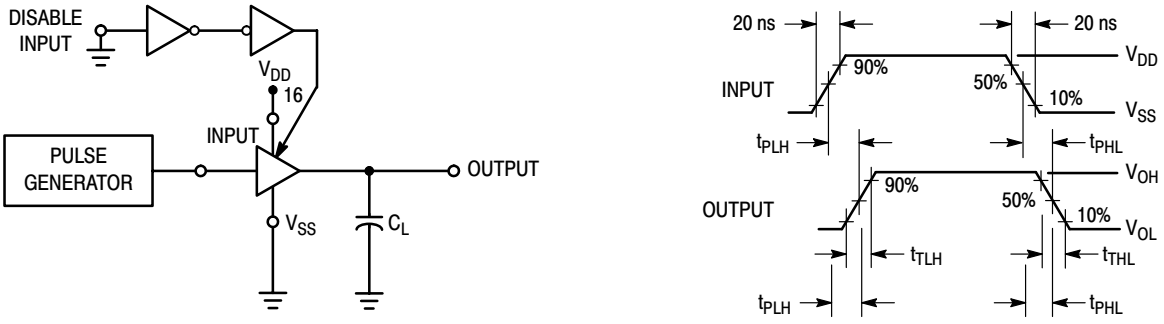


**Figure 1. Switching Time Test Circuit and Waveforms ($t_{TLH}$, $t_{THL}$, $t_{PHL}$, and $t_{PLH}$)**



Share Feedback
Your Opinion Matters

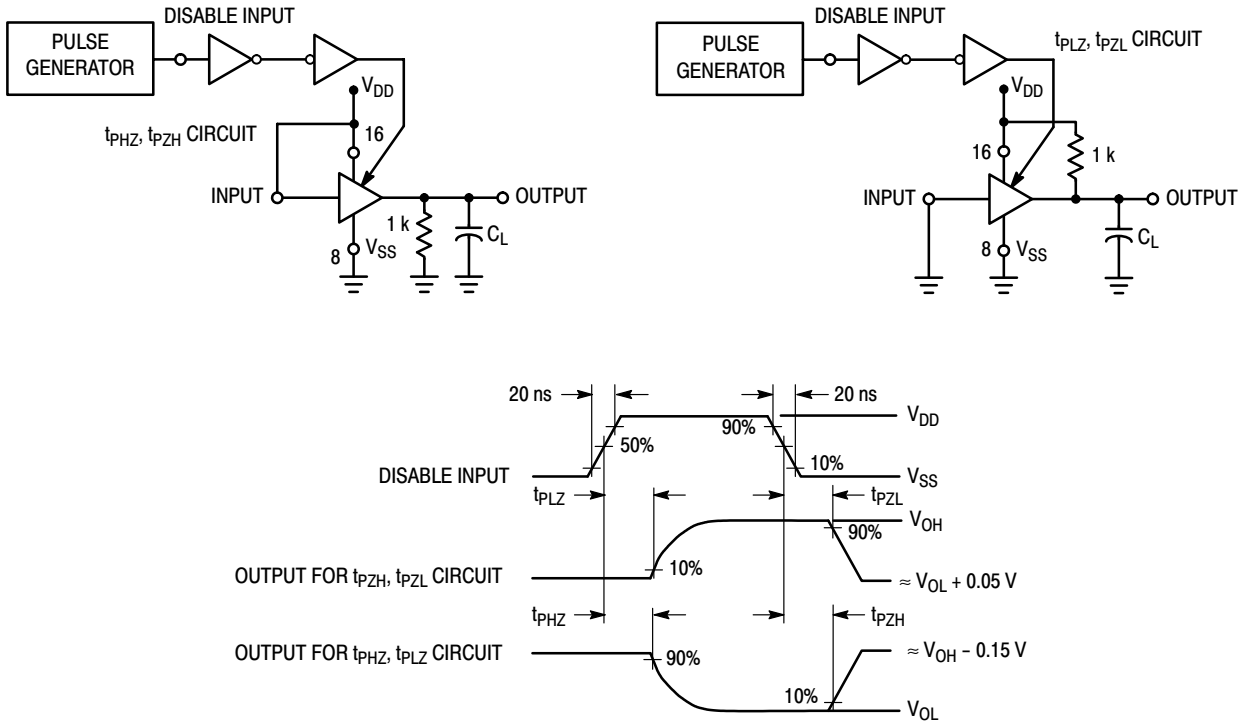


**Figure 2. 3-State AC Test Circuit and Waveforms ($t_{PLZ}$, $t_{PHZ}$, $t_{PZH}$, $t_{PZL}$)**

## ORDERING INFORMATION

| Device | Package | Shipping† |
|---|---|---|
| MC14503BDG | SOIC-16 (Pb-Free) | 48 / Rail |
| MC14503BDR2G | SOIC-16 (Pb-Free) | 2500 / Tape & Reel |
| NLV14503BDR2G* | SOIC-16 (Pb-Free) | 2500 / Tape & Reel |

† For information on tape and reel specifications, including part orientation and tape sizes, please refer to our Tape and Reel Packaging Specifications Brochure, BRD8011/D.

* NLV Prefix for Automotive and Other Applications Requiring Unique Site and Control Change Requirements; AEC-Q100 Qualified and PPAP Capable.



Share Feedback
Your Opinion Matters

## REVISION HISTORY

| Revision | Description of Changes | Date |
|---|---|---|
| 11 | Rebranded the Data Sheet to **onsemi** format. | 10/3/2025 |

This document has undergone updates prior to the inclusion of this revision history table. The changes tracked here only reflect updates made on the noted approval dates.



Share Feedback
Your Opinion Matters

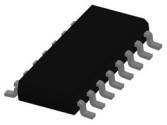

**SOIC−16 9.90x3.90x1.37 1.27P**
CASE 751B
ISSUE M

DATE 18 OCT 2024

NOTES:
1. DIMENSIONING AND TOLERANCING PER ASME Y14.5M, 2018.
2. DIMENSION IN MILLIMETERS. ANGLE IN DEGREES.
3. DIMENSIONS D AND E1 DO NOT INCLUDE MOLD PROTRUSION.
4. MAXIMUM MOLD PROTRUSION 0.15mm PER SIDE.
5. DIMENSION b DOES NOT INCLUDE DAMBAR PROTRUSION. ALLOWABLE DAMBAR PROTRUSION SHALL BE 0.127mm TOTAL IN EXCESS OF THE b DIMENSION AT MAXIMUM MATERIAL CONDITION.

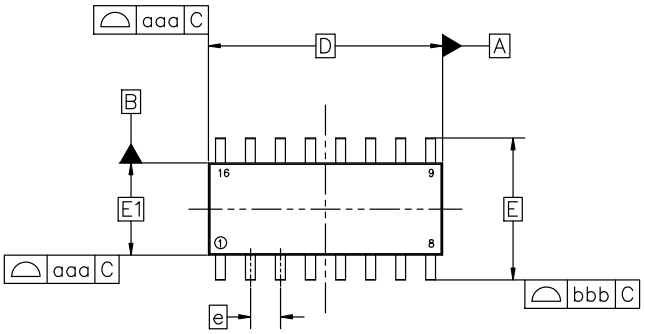


TOP VIEW

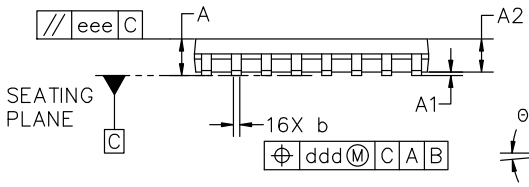


SIDE VIEW

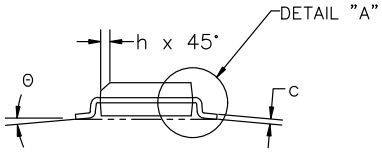


END VIEW

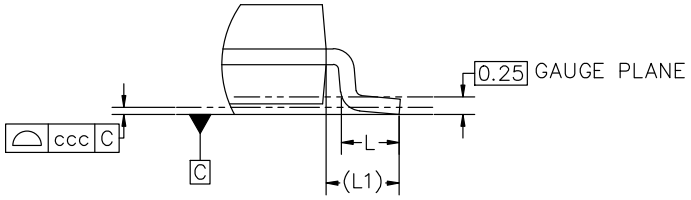


DETAIL "A"
Scale 3:1

| MILLIMETERS | | | |
|---|---|---|---|
| DIM | MIN | NOM | MAX |
| A | 1.35 | 1.55 | 1.75 |
| A1 | 0.10 | 0.18 | 0.25 |
| A2 | 1.25 | 1.37 | 1.50 |
| b | 0.35 | 0.42 | 0.49 |
| c | 0.19 | 0.22 | 0.25 |
| D | 9.90 BSC | | |
| E | 6.00 BSC | | |
| E1 | 3.90 BSC | | |
| e | 1.27 BSC | | |
| h | 0.25 | −−− | 0.50 |
| L | 0.40 | 0.83 | 1.25 |
| L1 | 1.05 REF | | |
| Θ | 0° | −−− | 7° |
| TOLERANCE OF FORM AND POSITION | | | |
| aaa | 0.10 | | |
| bbb | 0.20 | | |
| ccc | 0.10 | | |
| ddd | 0.25 | | |
| eee | 0.10 | | |

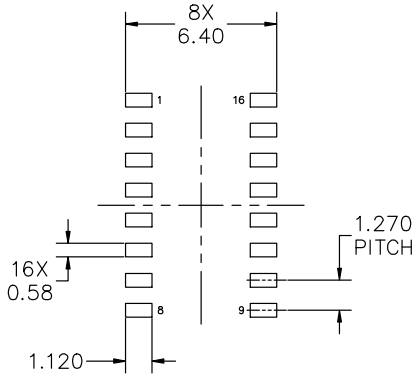


RECOMMENDED MOUNTING FOOTPRINT

*FOR ADDITIONAL INFORMATION ON OUR PB−FREE STRATEGY AND SOLDERING DETAILS, PLEASE DOWNLOAD THE onsemi SOLDERING AND MOUNTING TECHNIQUES REFERENCE MANUAL, SOLDERRM/D

| | | | |
|---|---|---|---|
| **DOCUMENT NUMBER:** | **98ASB42566B** | Electronic versions are uncontrolled except when accessed directly from the Document Repository. Printed versions are uncontrolled except when stamped "CONTROLLED COPY" in red. | |
| **DESCRIPTION:** | **SOIC−16 9.90X3.90X1.37 1.27P** | | **PAGE 1 OF 2** |

**onsemi** and onsemi are trademarks of Semiconductor Components Industries, LLC dba **onsemi** or its subsidiaries in the United States and/or other countries. **onsemi** reserves the right to make changes without further notice to any products herein. **onsemi** makes no warranty, representation or guarantee regarding the suitability of its products for any particular purpose, nor does **onsemi** assume any liability arising out of the application or use of any product or circuit, and specifically disclaims any and all liability, including without limitation special, consequential or incidental damages. **onsemi** does not convey any license under its patent rights nor the rights of others.

© Semiconductor Components Industries, LLC, 2019

**SOIC−16 9.90x3.90x1.37 1.27P**
CASE 751B
ISSUE M

DATE 18 OCT 2024

## GENERIC MARKING DIAGRAM*

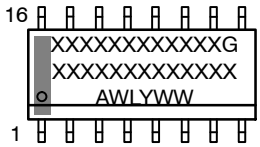


XXXXX = Specific Device Code
A = Assembly Location
WL = Wafer Lot
Y = Year
WW = Work Week
G = Pb−Free Package

*This information is generic. Please refer to device data sheet for actual part marking. Pb−Free indicator, “G” or microdot “▪”, may or may not be present. Some products may not follow the Generic Marking.

STYLE 1:

| PIN | |
|---|---|
| 1. | COLLECTOR |
| 2. | BASE |
| 3. | EMITTER |
| 4. | NO CONNECTION |
| 5. | EMITTER |
| 6. | BASE |
| 7. | COLLECTOR |
| 8. | COLLECTOR |
| 9. | BASE |
| 10. | EMITTER |
| 11. | NO CONNECTION |
| 12. | EMITTER |
| 13. | BASE |
| 14. | COLLECTOR |
| 15. | EMITTER |
| 16. | COLLECTOR |

STYLE 2:

| PIN | |
|---|---|
| 1. | CATHODE |
| 2. | ANODE |
| 3. | NO CONNECTION |
| 4. | CATHODE |
| 5. | CATHODE |
| 6. | NO CONNECTION |
| 7. | ANODE |
| 8. | CATHODE |
| 9. | CATHODE |
| 10. | ANODE |
| 11. | NO CONNECTION |
| 12. | CATHODE |
| 13. | CATHODE |
| 14. | NO CONNECTION |
| 15. | ANODE |
| 16. | CATHODE |

STYLE 3:

| PIN | |
|---|---|
| 1. | COLLECTOR, DYE #1 |
| 2. | BASE, #1 |
| 3. | EMITTER, #1 |
| 4. | COLLECTOR, #1 |
| 5. | COLLECTOR, #2 |
| 6. | BASE, #2 |
| 7. | EMITTER, #2 |
| 8. | COLLECTOR, #2 |
| 9. | COLLECTOR, #3 |
| 10. | BASE, #3 |
| 11. | EMITTER, #3 |
| 12. | COLLECTOR, #3 |
| 13. | COLLECTOR, #4 |
| 14. | BASE, #4 |
| 15. | EMITTER, #4 |
| 16. | COLLECTOR, #4 |

STYLE 4:

| PIN | |
|---|---|
| 1. | COLLECTOR, DYE #1 |
| 2. | COLLECTOR, #1 |
| 3. | COLLECTOR, #2 |
| 4. | COLLECTOR, #2 |
| 5. | COLLECTOR, #3 |
| 6. | COLLECTOR, #3 |
| 7. | COLLECTOR, #4 |
| 8. | COLLECTOR, #4 |
| 9. | BASE, #4 |
| 10. | EMITTER, #4 |
| 11. | BASE, #3 |
| 12. | EMITTER, #3 |
| 13. | BASE, #2 |
| 14. | EMITTER, #2 |
| 15. | BASE, #1 |
| 16. | EMITTER, #1 |

STYLE 5:

| PIN | |
|---|---|
| 1. | DRAIN, DYE #1 |
| 2. | DRAIN, #1 |
| 3. | DRAIN, #2 |
| 4. | DRAIN, #2 |
| 5. | DRAIN, #3 |
| 6. | DRAIN, #3 |
| 7. | DRAIN, #4 |
| 8. | DRAIN, #4 |
| 9. | GATE, #4 |
| 10. | SOURCE, #4 |
| 11. | GATE, #3 |
| 12. | SOURCE, #3 |
| 13. | GATE, #2 |
| 14. | SOURCE, #2 |
| 15. | GATE, #1 |
| 16. | SOURCE, #1 |

STYLE 6:

| PIN | |
|---|---|
| 1. | CATHODE |
| 2. | CATHODE |
| 3. | CATHODE |
| 4. | CATHODE |
| 5. | CATHODE |
| 6. | CATHODE |
| 7. | CATHODE |
| 8. | CATHODE |
| 9. | ANODE |
| 10. | ANODE |
| 11. | ANODE |
| 12. | ANODE |
| 13. | ANODE |
| 14. | ANODE |
| 15. | ANODE |
| 16. | ANODE |

STYLE 7:

| PIN | |
|---|---|
| 1. | SOURCE N-CH |
| 2. | COMMON DRAIN (OUTPUT) |
| 3. | COMMON DRAIN (OUTPUT) |
| 4. | GATE P-CH |
| 5. | COMMON DRAIN (OUTPUT) |
| 6. | COMMON DRAIN (OUTPUT) |
| 7. | COMMON DRAIN (OUTPUT) |
| 8. | SOURCE P-CH |
| 9. | SOURCE P-CH |
| 10. | COMMON DRAIN (OUTPUT) |
| 11. | COMMON DRAIN (OUTPUT) |
| 12. | COMMON DRAIN (OUTPUT) |
| 13. | GATE N-CH |
| 14. | COMMON DRAIN (OUTPUT) |
| 15. | COMMON DRAIN (OUTPUT) |
| 16. | SOURCE N-CH |




**onsemi** and ONSEMI are trademarks of Semiconductor Components Industries, LLC dba **onsemi** or its subsidiaries in the United States and/or other countries. **onsemi** reserves the right to make changes without further notice to any products herein. **onsemi** makes no warranty, representation or guarantee regarding the suitability of its products for any particular purpose, nor does **onsemi** assume any liability arising out of the application or use of any product or circuit, and specifically disclaims any and all liability, including without limitation special, consequential or incidental damages. **onsemi** does not convey any license under its patent rights nor the rights of others.

© Semiconductor Components Industries, LLC, 2019

**onsemi**, , and other names, marks, and brands are registered and/or common law trademarks of Semiconductor Components Industries, LLC dba "**onsemi**" or its affiliates and/or subsidiaries in the United States and/or other countries. **onsemi** owns the rights to a number of patents, trademarks, copyrights, trade secrets, and other intellectual property. A listing of **onsemi**'s product/patent coverage may be accessed at www.onsemi.com/site/pdf/Patent−Marking.pdf. **onsemi** reserves the right to make changes at any time to any products or information herein, without notice. The information herein is provided "as−is" and **onsemi** makes no warranty, representation or guarantee regarding the accuracy of the information, product features, availability, functionality, or suitability of its products for any particular purpose, nor does **onsemi** assume any liability arising out of the application or use of any product or circuit, and specifically disclaims any and all liability, including without limitation special, consequential or incidental damages. Buyer is responsible for its products and applications using **onsemi** products, including compliance with all laws, regulations and safety requirements or standards, regardless of any support or applications information provided by **onsemi**. "Typical" parameters which may be provided in **onsemi** data sheets and/or specifications can and do vary in different applications and actual performance may vary over time. All operating parameters, including "Typicals" must be validated for each customer application by customer's technical experts. **onsemi** does not convey any license under any of its intellectual property rights nor the rights of others. **onsemi** products are not designed, intended, or authorized for use as a critical component in life support systems or any FDA Class 3 medical devices or medical devices with a same or similar classification in a foreign jurisdiction or any devices intended for implantation in the human body. Should Buyer purchase or use **onsemi** products for any such unintended or unauthorized application, Buyer shall indemnify and hold **onsemi** and its officers, employees, subsidiaries, affiliates, and distributors harmless against all claims, costs, damages, and expenses, and reasonable attorney fees arising out of, directly or indirectly, any claim of personal injury or death associated with such unintended or unauthorized use, even if such claim alleges that **onsemi** was negligent regarding the design or manufacture of the part. **onsemi** is an Equal Opportunity/Affirmative Action Employer. This literature is subject to all applicable copyright laws and is not for resale in any manner.

## ADDITIONAL INFORMATION

**TECHNICAL PUBLICATIONS**:
**Technical Library:** www.onsemi.com/design/resources/technical−documentation
**onsemi Website:** www.onsemi.com

**ONLINE SUPPORT**: www.onsemi.com/support
**For additional information, please contact your local Sales Representative at** www.onsemi.com/support/sales