Binary Up/Down Counter

MC14516B

The MC14516B synchronous up/down binary counter is constructed with MOS P-channel and N-channel enhancement mode devices in a monolithic structure.

This counter can be preset by applying the desired value, in binary, to the Preset inputs (P0, P1, P2, P3) and then bringing the Preset Enable (PE) high. The direction of counting is controlled by applying a high (for up counting) or a low (for down counting) to the UP/DOWN input. The state of the counter changes on the positive transition of the clock input.

Cascading can be accomplished by connecting the $\overline{\text{Carry Out}}$ to the $\overline{\text{Carry In}}$ of the next stage while clocking each counter in parallel. The outputs (Q0, Q1, Q2, Q3) can be reset to a low state by applying a high to the reset (R) pin.

This CMOS counter finds primary use in up/down and difference counting. Other applications include: (1) Frequency synthesizer applications where low power dissipation and/or high noise immunity is desired, (2) Analog-to-Digital and Digital-to-Analog conversions, and (3) Magnitude and sign generation.

Features

- Diode Protection on All Inputs
- Supply Voltage Range = 3.0 Vdc to 18 Vdc
- Internally Synchronous for High Speed
- Logic Edge-Clocked Design − Count Occurs on Positive Going Edge of Clock
- Single Pin Reset
- Asynchronous Preset Enable Operation
- Capable of Driving Two Low-Power TTL Loads or One Low-Power Schottky Load Over the Rated Temperature Range
- These Devices are Pb-Free and are RoHS Compliant
- NLV Prefix for Automotive and Other Applications Requiring Unique Site and Control Change Requirements; AEC-Q100 Qualified and PPAP Capable

MAXIMUM RATINGS (Voltages Referenced to V_{SS})

Parameter	Symbol	Value	Unit
DC Supply Voltage Range	V_{DD}	−0.5 to +18.0	V
Input or Output Voltage Range (DC or Transient)	V_{in}, V_{out}	−0.5 to V_{DD} + 0.5	V
Input or Output Current (DC or Transient) per Pin	I_{in}, I_{out}	±10	mA
Power Dissipation, per Package (Note 1)	P_D	500	mW
Ambient Temperature Range	T_A	−55 to +125	°C
Storage Temperature Range	T_{stg}	−65 to +150	°C
Lead Temperature (8-Second Soldering)	T_L	260	°C

Stresses exceeding those listed in the Maximum Ratings table may damage the device. If any of these limits are exceeded, device functionality should not be assumed, damage may occur and reliability may be affected. Operating the device outside its recommended conditions, but still within its maximum rated limits may not cause immediate damage. However, doing so can lead to reduced performance, unpredictable behavior, and potentially shorten the device's lifespan or reliability.

1. Temperature Derating: Plastic "DW" Packages:
   – 7.0 mW/°C From 65 °C To 125 °C

MARKING DIAGRAM

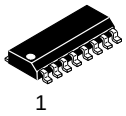

SOIC-16
D SUFFIX
CASE 751B



A	= Assembly Location
WL	= Wafer Lot
Y	= Year
WW	= Work Week
G	= Pb-Free Package

ORDERING INFORMATION

See detailed ordering and shipping information in the package dimensions section on page 2 of this data sheet.

This device contains protection circuitry to guard against damage due to high static voltages or electric fields. However, precautions must be taken to avoid applications of any voltage higher than maximum rated voltages to this high-impedance circuit. For proper operation, V_{in} and V_{out} should be constrained to the range $V_{SS} \le (V_{in}$ or $V_{out}) \le V_{DD}$.

Unused inputs must always be tied to an appropriate logic voltage level (e.g., either V_{SS} or V_{DD}). Unused outputs must be left open.

© Semiconductor Components Industries, LLC, 2014

PIN ASSIGNMENT

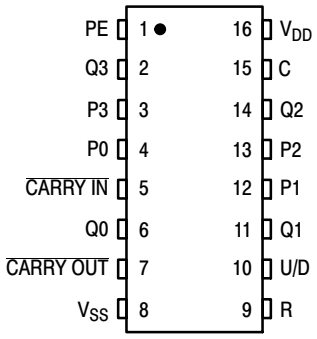

BLOCK DIAGRAM

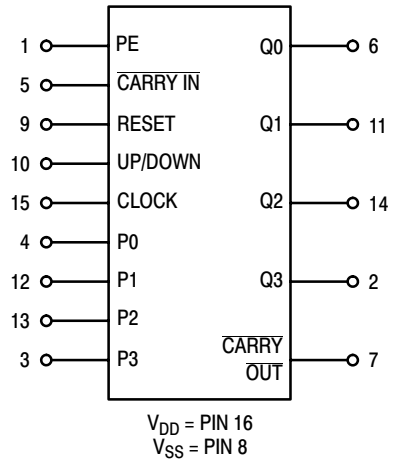

TRUTH TABLE

Carry In	Up/Down	Preset Enable	Reset	Clock	Action
1	X	0	0	X	No Count
0	1	0	0	⎍	Count Up
0	0	0	0	⎍	Count Down
X	X	1	0	X	Preset
X	X	X	1	X	Reset

X = Don't Care

NOTE: When counting up, the $\overline{\text{Carry Out}}$ signal is normally high and is low only when Q0 through Q3 are high and $\overline{\text{Carry In}}$ is low. When counting down, $\overline{\text{Carry Out}}$ is low only when Q0 through Q3 and $\overline{\text{Carry In}}$ are low.

ORDERING INFORMATION

Device	Package	Shipping†
MC14516BDG	SOIC-16 (Pb-Free)	48 Units / Rail
MC14516BDR2G	SOIC-16 (Pb-Free)	2500 / Tape & Reel
NLV14516BDR2G*		

† For information on tape and reel specifications, including part orientation and tape sizes, please refer to our Tape and Reel Packaging Specifications Brochure, BRD8011/D.

* NLV Prefix for Automotive and Other Applications Requiring Unique Site and Control Change Requirements; AEC-Q100 Qualified and PPAP Capable.

Share Feedback
Your Opinion Matters

ELECTRICAL CHARACTERISTICS (Voltages Referenced to V_{SS})

Characteristic	Symbol	V_{DD} Vdc	−55 °C Min	−55 °C Max	25 °C Min	25 °C Typ (Note 2)	25 °C Max	125 °C Min	125 °C Max	Unit
Output Voltage “0” Level V_{in} = V_{DD} or 0	V_{OL}	5.0 10 15	− − −	0.05 0.05 0.05	− − −	0 0 0	0.05 0.05 0.05	− − −	0.05 0.05 0.05	Vdc
“1” Level V_{in} = 0 or V_{DD}	V_{OH}	5.0 10 15	4.95 9.95 14.95	− − −	4.95 9.95 14.95	5.0 10 15	− − −	4.95 9.95 14.95	− − −	Vdc
Input Voltage “0” Level (V_O = 4.5 or 0.5 Vdc) (V_O = 9.0 or 1.0 Vdc) (V_O = 13.5 or 1.5 Vdc)	V_{IL}	5.0 10 15	− − −	1.5 3.0 4.0	− − −	2.25 4.50 6.75	1.5 3.0 4.0	− − −	1.5 3.0 4.0	Vdc
“1” Level (V_O = 0.5 or 4.5 Vdc) (V_O = 1.0 or 9.0 Vdc) (V_O = 1.5 or 13.5 Vdc)	V_{IH}	5.0 10 15	3.5 7.0 11	− − −	3.5 7.0 11	2.75 5.50 8.25	− − −	3.5 7.0 11	− − −	Vdc
Output Drive Current (V_{OH} = 2.5 Vdc) Source (V_{OH} = 4.6 Vdc) (V_{OH} = 9.5 Vdc) (V_{OH} = 13.5 Vdc)	I_{OH}	5.0 5.0 10 15	– 3.0 – 0.64 – 1.6 – 4.2	− − − −	– 2.4 – 0.51 – 1.3 – 3.4	– 4.2 – 0.88 – 2.25 – 8.8	− − − −	– 1.7 – 0.36 – 0.9 – 2.4	− − − −	mAdc
(V_{OL} = 0.4 Vdc) Sink (V_{OL} = 0.5 Vdc) (V_{OL} = 1.5 Vdc)	I_{OL}	5.0 10 15	0.64 1.6 4.2	− − −	0.51 1.3 3.4	0.88 2.25 8.8	− − −	0.36 0.9 2.4	− − −	mAdc
Input Current	I_{in}	15	−	± 0.1	−	±0.00001	± 0.1	−	± 1.0	μAdc
Input Capacitance (V_{in} = 0)	C_{in}	−	−	−	−	5.0	7.5	−	−	pF
Quiescent Current (Per Package)	I_{DD}	5.0 10 15	− − −	5.0 10 20	− − −	0.005 0.010 0.015	5.0 10 20	− − −	150 300 600	μAdc
Total Supply Current (Note 3, 4) (Dynamic plus Quiescent, Per Package) (C_L = 50 pF on all outputs, all buffers switching)	I_T	5.0 10 15	I_T = (0.58 μA/kHz) f + I_{DD} I_T = (1.20 μA/kHz) f + I_{DD} I_T = (1.70 μA/kHz) f + I_{DD}							μAdc

2. Data labelled “Typ” is not to be used for design purposes but is intended as an indication of the IC’s potential performance.
3. The formulas given are for the typical characteristics only at 25 °C.
4. To calculate total supply current at loads other than 50 pF: $I_T(C_L) = I_T(50\ pF) + (C_L - 50)\ Vfk$ where: I_T is in μA (per package), C_L in pF, $V = (V_{DD} - V_{SS})$ in volts, f in kHz is input frequency, and k = 0.001.

Share Feedback
Your Opinion Matters

SWITCHING CHARACTERISTICS (Note 5) (C_L = 50 pF, T_A = 25 °C)

Characteristic	Symbol	V_{DD}	All Types			Unit
			Min	Typ (Note 6)	Max	
Output Rise and Fall Time t_{TLH}, t_{THL} = (1.5 ns/pF) C_L + 25 ns t_{TLH}, t_{THL} = (0.75 ns/pF) C_L + 12.5 ns t_{TLH}, t_{THL} = (0.55 ns/pF) C_L + 9.5 ns	t_{TLH}, t_{THL}	5.0 10 15	– – –	100 50 40	200 100 80	ns
Propagation Delay Time Clock to Q t_{PLH}, t_{PHL} = (1.7 ns/pF) C_L + 230 ns t_{PLH}, t_{PHL} = (0.66 ns/pF) C_L + 97 ns t_{PLH}, t_{PHL} = (0.5 ns/pF) C_L + 75 ns	t_{PLH}, t_{PHL}	5.0 10 15	– – –	315 130 100	630 260 200	ns
Clock to $\overline{\text{Carry Out}}$ t_{PLH}, t_{PHL} = (1.7 ns/pF) C_L + 230 ns t_{PLH}, t_{PHL} = (0.66 ns/pF) C_L + 97 ns t_{PLH}, t_{PHL} = (0.5 ns/pF) C_L + 75 ns	t_{PLH}, t_{PHL}	5.0 10 15	– – –	315 130 100	630 260 200	ns
$\overline{\text{Carry In}}$ to $\overline{\text{Carry Out}}$ t_{PLH}, t_{PHL} = (1.7 ns/pF) C_L + 230 ns t_{PLH}, t_{PHL} = (0.66 ns/pF) C_L + 97 ns t_{PLH}, t_{PHL} = (0.5 ns/pF) C_L + 75 ns	t_{PLH}, t_{PHL}	5.0 10 15	– – –	180 80 60	360 160 120	ns
Preset or Reset to Q t_{PLH}, t_{PHL} = (1.7 ns/pF) C_L + 230 ns t_{PLH}, t_{PHL} = (0.66 ns/pF) C_L + 97 ns t_{PLH}, t_{PHL} = (0.5 ns/pF) C_L + 75 ns	t_{PLH}, t_{PHL}	5.0 10 15	– – –	315 130 100	630 360 200	ns
Preset or Reset to $\overline{\text{Carry Out}}$ t_{PLH}, t_{PHL} = (1.7 ns/pF) C_L + 465 ns t_{PLH}, t_{PHL} = (0.66 ns/pF) C_L + 192 ns t_{PLH}, t_{PHL} = (0.5 ns/pF) C_L + 125 ns	t_{PLH}, t_{PHL}	5.0 10 15	– – –	550 225 150	1100 450 300	ns
Reset Pulse Width	t_w	5.0 10 15	380 200 160	190 100 80	– – –	ns
Clock Pulse Width	t_{WH}	5.0 10 15	350 170 140	200 100 75	– – –	ns
Clock Pulse Frequency	f_{cl}	5.0 10 15	– – –	3.0 6.0 8.0	1.5 3.0 4.0	MHz
Preset or Reset Removal Time The Preset or Reset signal must be low prior to a positive−going transition of the clock.	t_{rem}	5.0 10 15	650 230 180	325 115 90	– –	ns
Clock Rise and Fall Time	t_{TLH}, t_{THL}	5.0 10 15	– – –	– – –	15 5 4	μs
Setup Time $\overline{\text{Carry In}}$ to Clock	t_{su}	5.0 10 15	260 120 100	130 60 50	– – –	ns
Hold Time Clock to $\overline{\text{Carry In}}$	t_h	5.0 10 15	0 20 20	– 60 – 20 0	– – –	ns
Setup Time Up/Down to Clock	t_{su}	5.0 10 15	500 200 150	250 100 75	– – –	ns
Hold Time Clock to Up/Down	t_h	5.0 10 15	– 70 – 10 0	– 160 – 60 – 40	– – –	ns
Setup Time Pn to PE	t_{su}	5.0 10 15	– 40 – 30 – 25	– 120 – 70 – 50	– – –	ns
Hold Time PE to Pn	t_h	5.0 10 15	480 420 420	240 210 210	– – –	ns
Preset Enable Pulse Width	t_{WH}	5.0 10 15	200 100 80	100 50 40	– – –	ns

5. The formulas given are for the typical characteristics only at 25 °C.
6. Data labelled “Typ” is not to be used for design purposes but is intended as an Indication of the IC’s potential performance.

Share Feedback
Your Opinion Matters

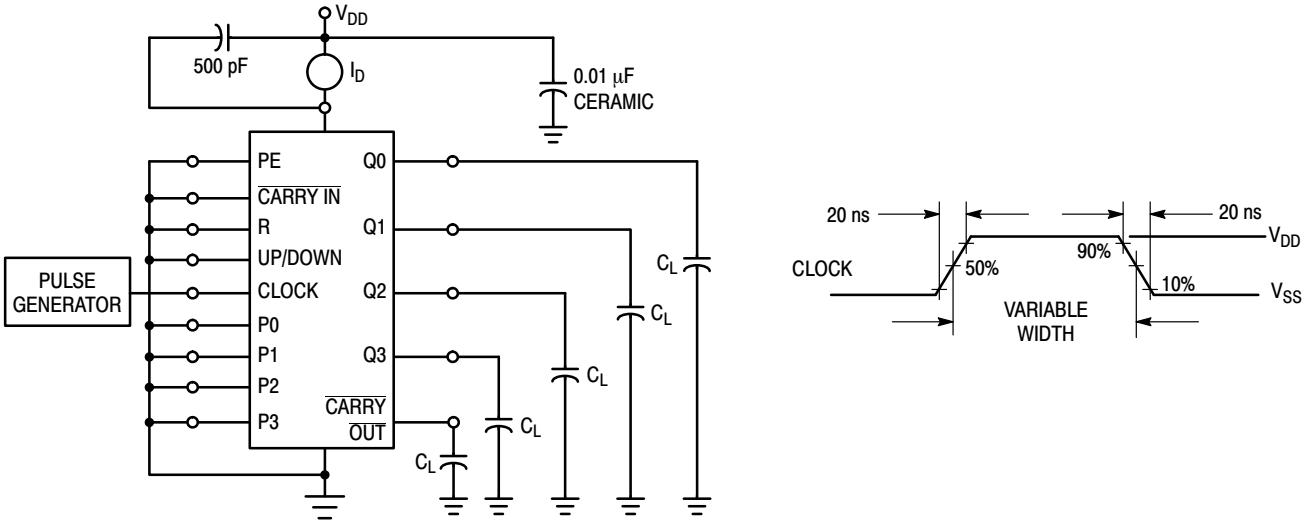

Figure 1. Power Dissipation Test Circuit and Waveform

LOGIC DIAGRAM

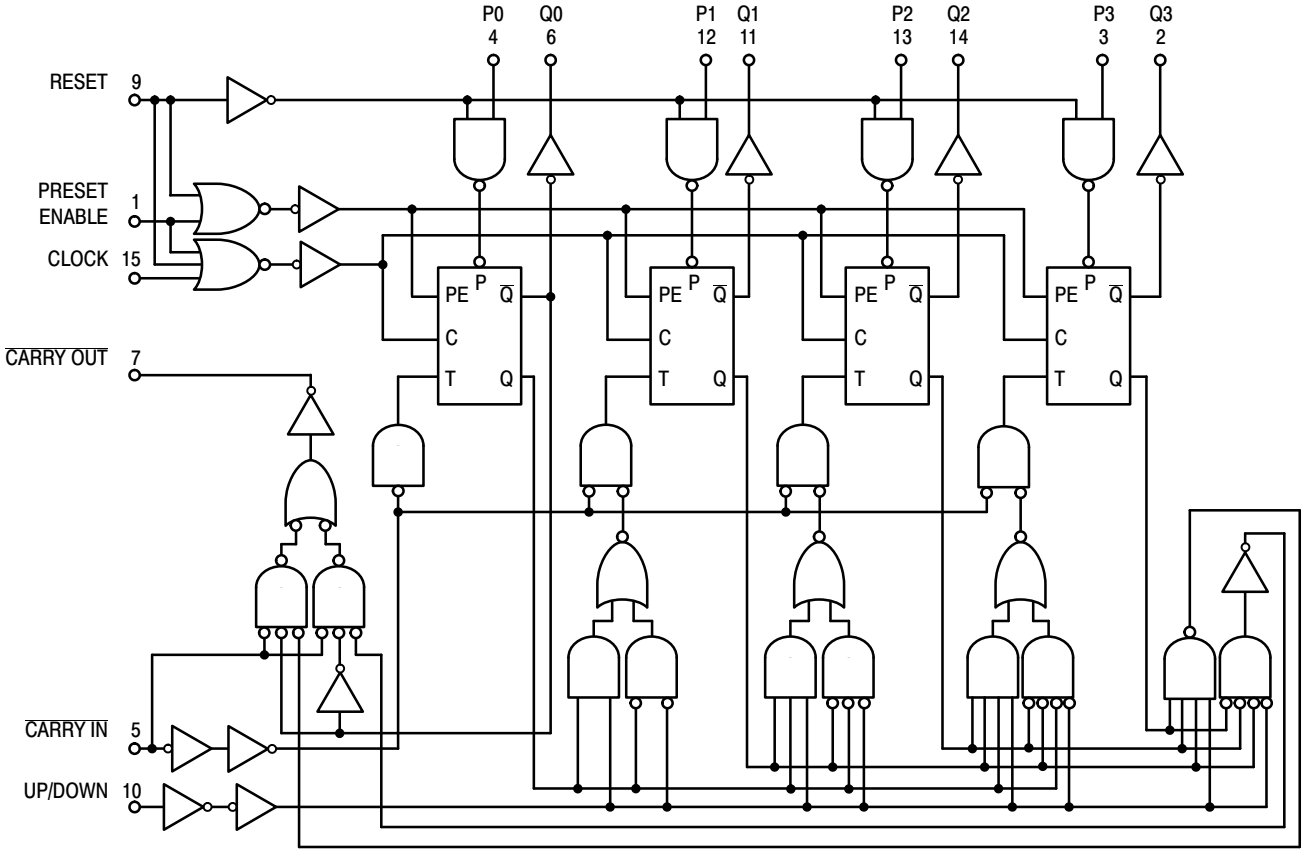

Share Feedback
Your Opinion Matters

TOGGLE FLIP-FLOP

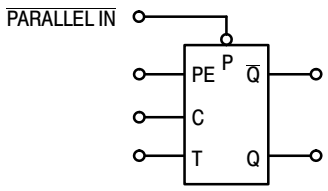

FLIP-FLOP FUNCTIONAL TRUTH TABLE

Preset Enable	Clock	T	Q_{n+1}
1	X	X	Parallel In
0	↗	0	Q_n
0	↗	1	$\overline{Q}_n$
0	↘	X	Q_n

X = Don't Care

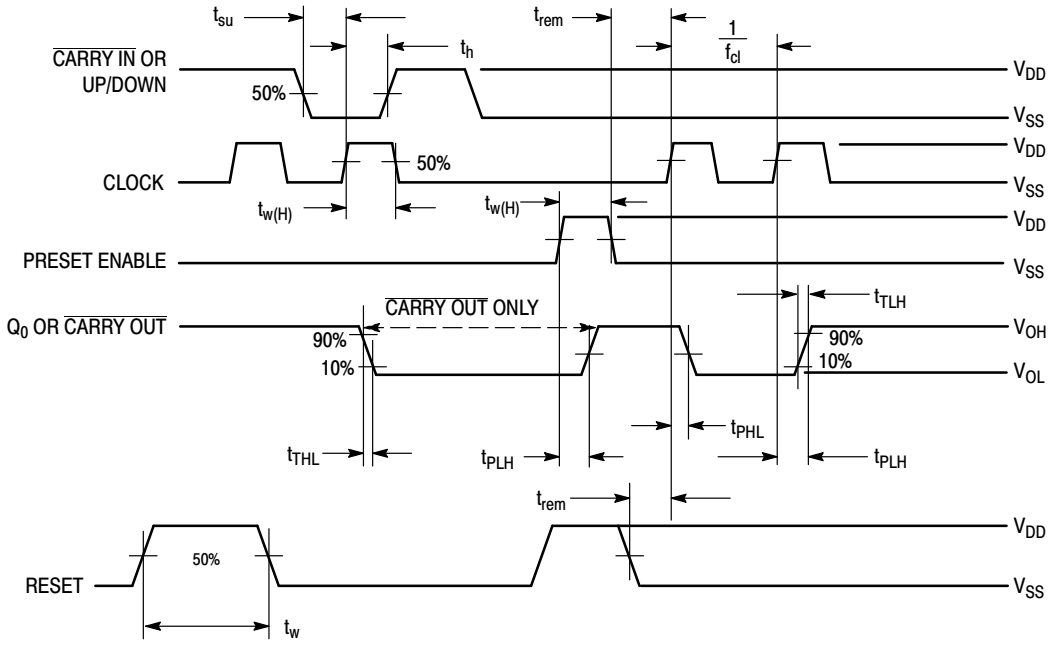

Figure 2. Switching Time Waveforms

PIN DESCRIPTIONS

INPUTS

P0, P1, P2, P3, Preset Inputs (Pins 4, 12, 13, 3) − Data on these inputs is loaded into the counter when PE is taken high.

$\overline{\text{Carry In}}$, (Pin 5) − This active-low input is used when Cascading stages. $\overline{\text{Carry In}}$ is usually connected to $\overline{\text{Carry Out}}$ of the previous stage. While high, Clock is inhibited.

Clock, (Pin 15) − Binary data is incremented or decremented, depending on the direction of count, on the positive transition of this input.

OUTPUTS

Q0, Q1, Q2, Q3, Binary outputs (Pins 6, 11, 14, 2) − Binary data is present on these outputs with Q0 corresponding to the least significant bit.

$\overline{\text{Carry Out}}$, (Pin 7) − Used when cascading stages, $\overline{\text{Carry Out}}$ is usually connected to $\overline{\text{Carry In}}$ of the next stage. This synchronous output is active low and may also be used to indicate terminal count.

CONTROLS

PE, Preset Enable, (Pin 1) − Asynchronously loads data on the Preset Inputs. This pin is active high and inhibits the clock when high.

R, Reset, (Pin 9) − Asynchronously resets the Q outputs to a low state. This pin is active high and inhibits the clock when high.

Up/Down, (Pin 10) − Controls the direction of count, high for up count, low for down count.

SUPPLY PINS

V_{SS}, Negative Supply Voltage, (Pin 8) − This pin is usually connected to ground.

V_{DD}, Positive Supply Voltage, (Pin 16) − This pin is connected to a positive supply voltage ranging from 3.0 V to 18 V.

Share Feedback
Your Opinion Matters

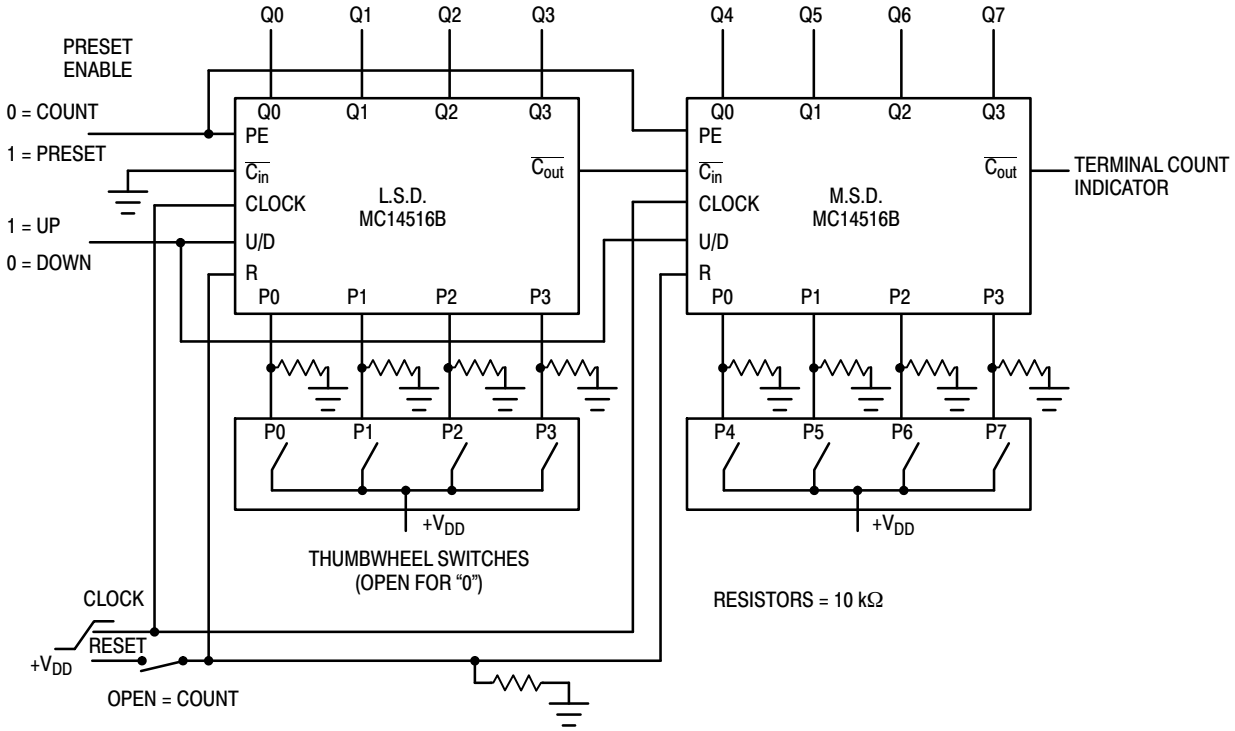

NOTE: The Least Significant Digit (L.S.D.) counts from a preset value once Preset Enable (PE) goes low. The Most Significant Digit (M.S.D.) is disabled while $\overline{C_{in}}$ is high. When the count of the L.S.D. reaches 0 (count down mode) or reaches 15 (count up mode), $\overline{C_{out}}$ goes low for one complete clock cycle, thus allowing the next counter to decrement/increment one count. (See Timing Diagram) The L.S.D. now counts through another cycle (15 clock pulses) and the above cycle is repeated.

Figure 3. Presettable Cascaded 8-Bit Up/Down Counter

Share Feedback
Your Opinion Matters

TIMING DIAGRAM FOR THE PRESETTABLE CASCADED 8-BIT UP/DOWN COUNTER

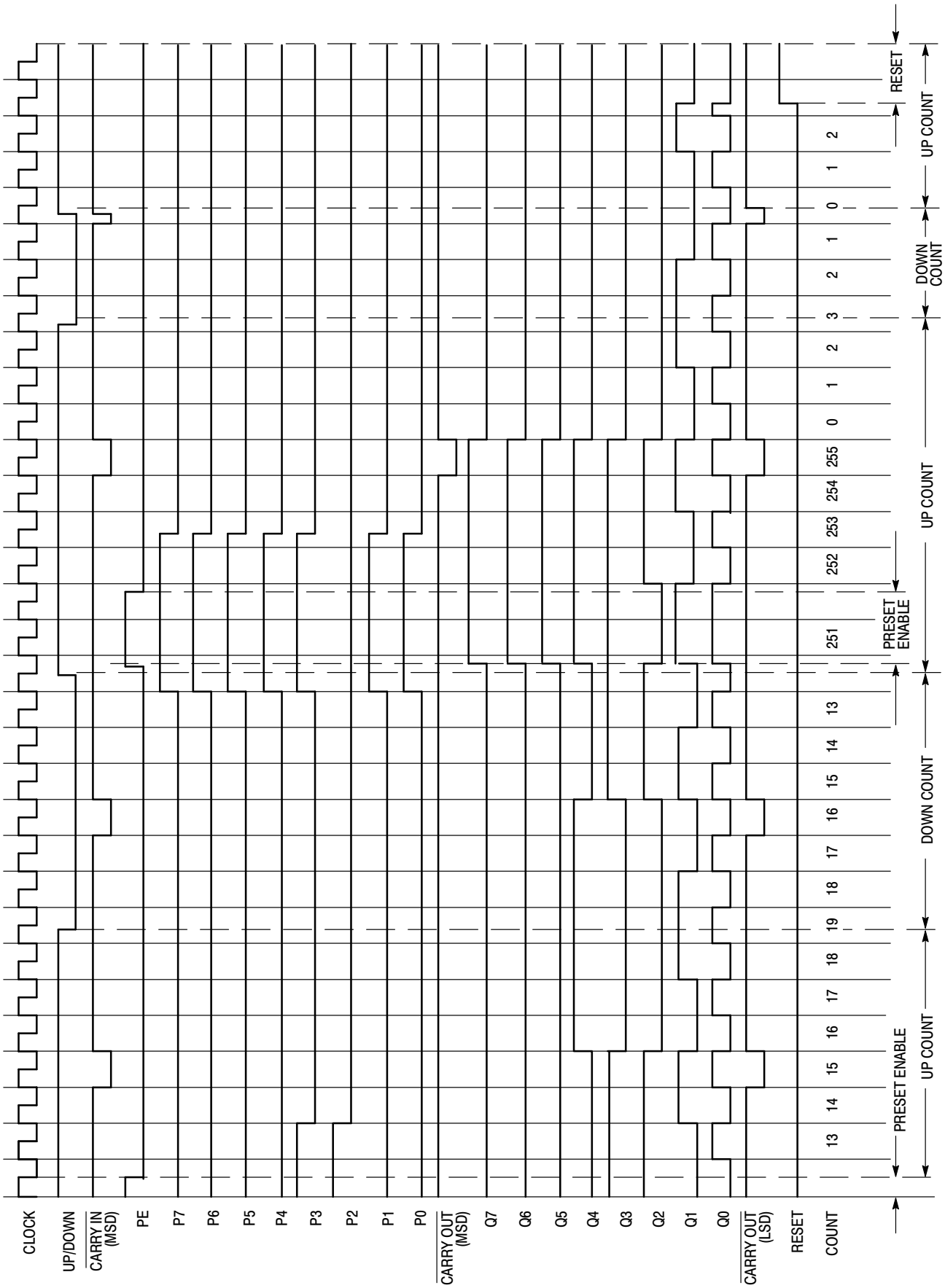

Share Feedback
Your Opinion Matters

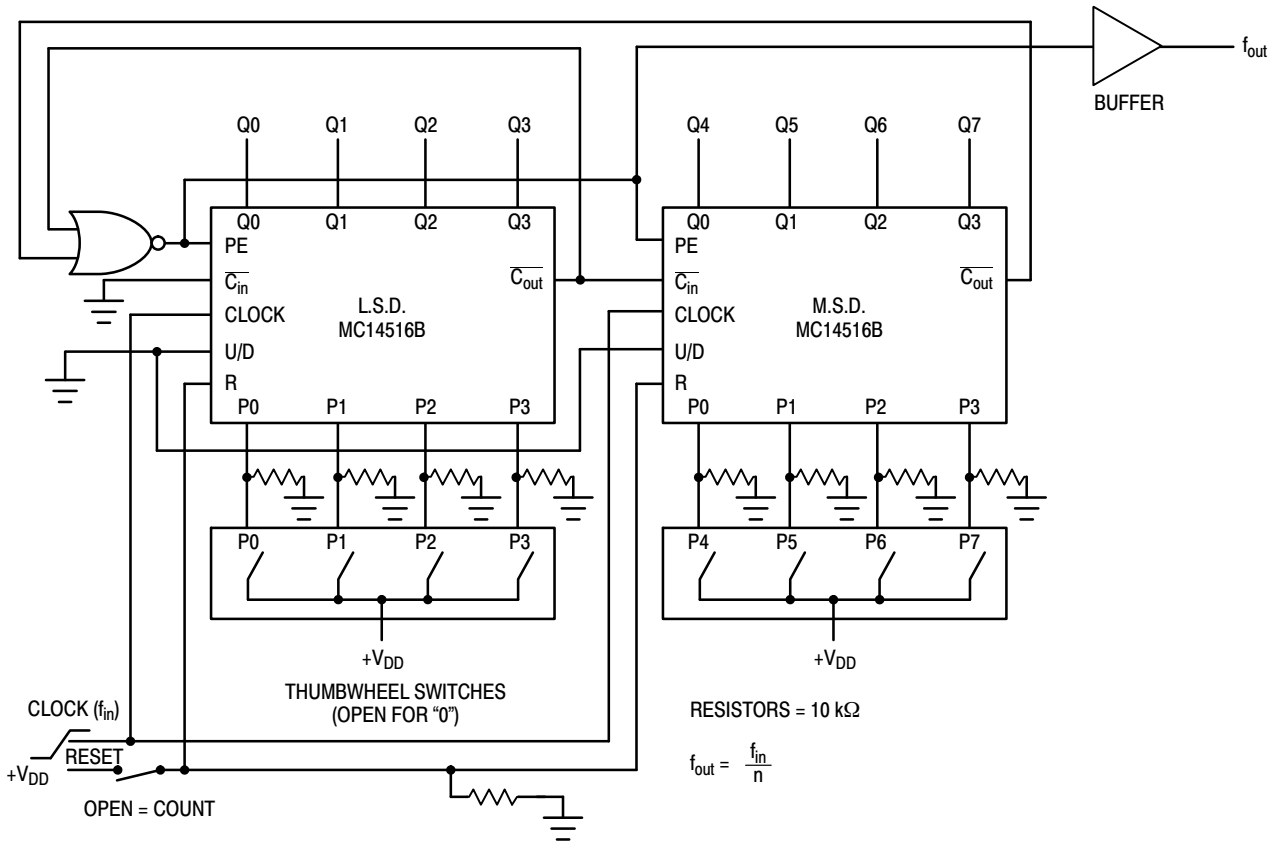

NOTE: The programmable frequency divider can be set by applying the desired divide ratio, in binary, to the preset inputs. For example, the maximum divide ratio of 255 may be obtained by applying a 1111 1111 to the preset inputs P0 to P7. For this divide operation, both counters should be configured in the count down mode. The divide ratio of zero is an undefined state and should be avoided.

Figure 4. Programmable Cascaded Frequency Divider

Share Feedback
Your Opinion Matters

REVISION HISTORY

Revision	Description of Changes	Date
11	Rebranded the Data Sheet to **onsemi** format.	10/3/2025

This document has undergone updates prior to the inclusion of this revision history table. The changes tracked here only reflect updates made on the noted approval dates.

Share Feedback
Your Opinion Matters

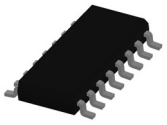

SOIC−16 9.90x3.90x1.37 1.27P
CASE 751B
ISSUE M

DATE 18 OCT 2024

NOTES:
1. DIMENSIONING AND TOLERANCING PER ASME Y14.5M, 2018.
2. DIMENSION IN MILLIMETERS. ANGLE IN DEGREES.
3. DIMENSIONS D AND E1 DO NOT INCLUDE MOLD PROTRUSION.
4. MAXIMUM MOLD PROTRUSION 0.15mm PER SIDE.
5. DIMENSION b DOES NOT INCLUDE DAMBAR PROTRUSION. ALLOWABLE DAMBAR PROTRUSION SHALL BE 0.127mm TOTAL IN EXCESS OF THE b DIMENSION AT MAXIMUM MATERIAL CONDITION.

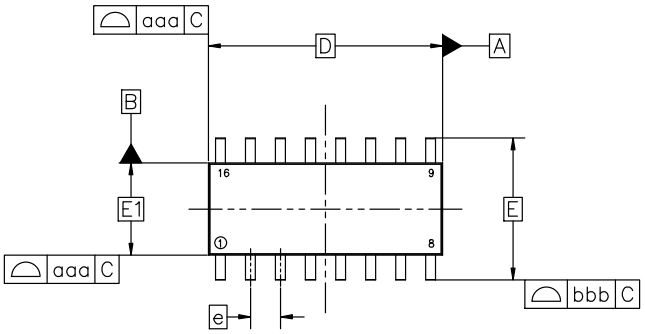

TOP VIEW

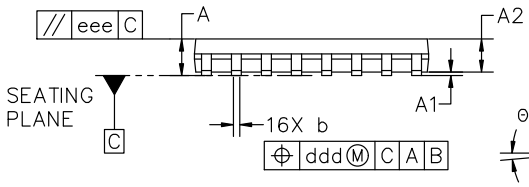

SIDE VIEW

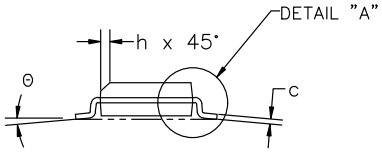

END VIEW

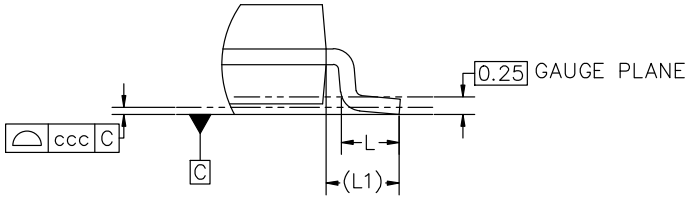

DETAIL "A"
Scale 3:1

MILLIMETERS			
DIM	MIN	NOM	MAX
A	1.35	1.55	1.75
A1	0.10	0.18	0.25
A2	1.25	1.37	1.50
b	0.35	0.42	0.49
c	0.19	0.22	0.25
D	9.90 BSC		
E	6.00 BSC		
E1	3.90 BSC		
e	1.27 BSC		
h	0.25	−−−	0.50
L	0.40	0.83	1.25
L1	1.05 REF		
Θ	0°	−−−	7°
TOLERANCE OF FORM AND POSITION			
aaa	0.10		
bbb	0.20		
ccc	0.10		
ddd	0.25		
eee	0.10		

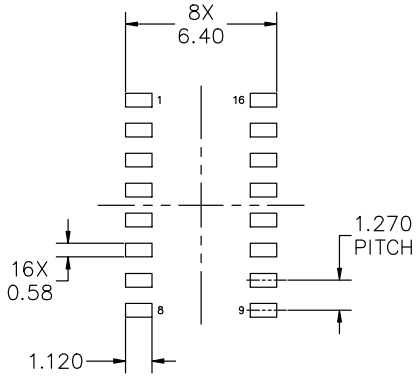

RECOMMENDED MOUNTING FOOTPRINT

*FOR ADDITIONAL INFORMATION ON OUR PB−FREE STRATEGY AND SOLDERING DETAILS, PLEASE DOWNLOAD THE onsemi SOLDERING AND MOUNTING TECHNIQUES REFERENCE MANUAL, SOLDERRM/D

DOCUMENT NUMBER:	**98ASB42566B**	Electronic versions are uncontrolled except when accessed directly from the Document Repository. Printed versions are uncontrolled except when stamped "CONTROLLED COPY" in red.	
DESCRIPTION:	**SOIC−16 9.90X3.90X1.37 1.27P**		**PAGE 1 OF 2**

onsemi and onsemi are trademarks of Semiconductor Components Industries, LLC dba **onsemi** or its subsidiaries in the United States and/or other countries. **onsemi** reserves the right to make changes without further notice to any products herein. **onsemi** makes no warranty, representation or guarantee regarding the suitability of its products for any particular purpose, nor does **onsemi** assume any liability arising out of the application or use of any product or circuit, and specifically disclaims any and all liability, including without limitation special, consequential or incidental damages. **onsemi** does not convey any license under its patent rights nor the rights of others.

© Semiconductor Components Industries, LLC, 2019

SOIC−16 9.90x3.90x1.37 1.27P
CASE 751B
ISSUE M

DATE 18 OCT 2024

GENERIC MARKING DIAGRAM*

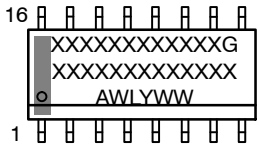

XXXXX = Specific Device Code
A = Assembly Location
WL = Wafer Lot
Y = Year
WW = Work Week
G = Pb−Free Package

*This information is generic. Please refer to device data sheet for actual part marking. Pb−Free indicator, “G” or microdot “▪”, may or may not be present. Some products may not follow the Generic Marking.

STYLE 1:

PIN	
1.	COLLECTOR
2.	BASE
3.	EMITTER
4.	NO CONNECTION
5.	EMITTER
6.	BASE
7.	COLLECTOR
8.	COLLECTOR
9.	BASE
10.	EMITTER
11.	NO CONNECTION
12.	EMITTER
13.	BASE
14.	COLLECTOR
15.	EMITTER
16.	COLLECTOR

STYLE 2:

PIN	
1.	CATHODE
2.	ANODE
3.	NO CONNECTION
4.	CATHODE
5.	CATHODE
6.	NO CONNECTION
7.	ANODE
8.	CATHODE
9.	CATHODE
10.	ANODE
11.	NO CONNECTION
12.	CATHODE
13.	CATHODE
14.	NO CONNECTION
15.	ANODE
16.	CATHODE

STYLE 3:

PIN	
1.	COLLECTOR, DYE #1
2.	BASE, #1
3.	EMITTER, #1
4.	COLLECTOR, #1
5.	COLLECTOR, #2
6.	BASE, #2
7.	EMITTER, #2
8.	COLLECTOR, #2
9.	COLLECTOR, #3
10.	BASE, #3
11.	EMITTER, #3
12.	COLLECTOR, #3
13.	COLLECTOR, #4
14.	BASE, #4
15.	EMITTER, #4
16.	COLLECTOR, #4

STYLE 4:

PIN	
1.	COLLECTOR, DYE #1
2.	COLLECTOR, #1
3.	COLLECTOR, #2
4.	COLLECTOR, #2
5.	COLLECTOR, #3
6.	COLLECTOR, #3
7.	COLLECTOR, #4
8.	COLLECTOR, #4
9.	BASE, #4
10.	EMITTER, #4
11.	BASE, #3
12.	EMITTER, #3
13.	BASE, #2
14.	EMITTER, #2
15.	BASE, #1
16.	EMITTER, #1

STYLE 5:

PIN	
1.	DRAIN, DYE #1
2.	DRAIN, #1
3.	DRAIN, #2
4.	DRAIN, #2
5.	DRAIN, #3
6.	DRAIN, #3
7.	DRAIN, #4
8.	DRAIN, #4
9.	GATE, #4
10.	SOURCE, #4
11.	GATE, #3
12.	SOURCE, #3
13.	GATE, #2
14.	SOURCE, #2
15.	GATE, #1
16.	SOURCE, #1

STYLE 6:

PIN	
1.	CATHODE
2.	CATHODE
3.	CATHODE
4.	CATHODE
5.	CATHODE
6.	CATHODE
7.	CATHODE
8.	CATHODE
9.	ANODE
10.	ANODE
11.	ANODE
12.	ANODE
13.	ANODE
14.	ANODE
15.	ANODE
16.	ANODE

STYLE 7:

PIN	
1.	SOURCE N-CH
2.	COMMON DRAIN (OUTPUT)
3.	COMMON DRAIN (OUTPUT)
4.	GATE P-CH
5.	COMMON DRAIN (OUTPUT)
6.	COMMON DRAIN (OUTPUT)
7.	COMMON DRAIN (OUTPUT)
8.	SOURCE P-CH
9.	SOURCE P-CH
10.	COMMON DRAIN (OUTPUT)
11.	COMMON DRAIN (OUTPUT)
12.	COMMON DRAIN (OUTPUT)
13.	GATE N-CH
14.	COMMON DRAIN (OUTPUT)
15.	COMMON DRAIN (OUTPUT)
16.	SOURCE N-CH

onsemi and ONSEMI are trademarks of Semiconductor Components Industries, LLC dba **onsemi** or its subsidiaries in the United States and/or other countries. **onsemi** reserves the right to make changes without further notice to any products herein. **onsemi** makes no warranty, representation or guarantee regarding the suitability of its products for any particular purpose, nor does **onsemi** assume any liability arising out of the application or use of any product or circuit, and specifically disclaims any and all liability, including without limitation special, consequential or incidental damages. **onsemi** does not convey any license under its patent rights nor the rights of others.

© Semiconductor Components Industries, LLC, 2019

onsemi, , and other names, marks, and brands are registered and/or common law trademarks of Semiconductor Components Industries, LLC dba "**onsemi**" or its affiliates and/or subsidiaries in the United States and/or other countries. **onsemi** owns the rights to a number of patents, trademarks, copyrights, trade secrets, and other intellectual property. A listing of **onsemi**'s product/patent coverage may be accessed at www.onsemi.com/site/pdf/Patent−Marking.pdf. **onsemi** reserves the right to make changes at any time to any products or information herein, without notice. The information herein is provided "as−is" and **onsemi** makes no warranty, representation or guarantee regarding the accuracy of the information, product features, availability, functionality, or suitability of its products for any particular purpose, nor does **onsemi** assume any liability arising out of the application or use of any product or circuit, and specifically disclaims any and all liability, including without limitation special, consequential or incidental damages. Buyer is responsible for its products and applications using **onsemi** products, including compliance with all laws, regulations and safety requirements or standards, regardless of any support or applications information provided by **onsemi**. "Typical" parameters which may be provided in **onsemi** data sheets and/or specifications can and do vary in different applications and actual performance may vary over time. All operating parameters, including "Typicals" must be validated for each customer application by customer's technical experts. **onsemi** does not convey any license under any of its intellectual property rights nor the rights of others. **onsemi** products are not designed, intended, or authorized for use as a critical component in life support systems or any FDA Class 3 medical devices or medical devices with a same or similar classification in a foreign jurisdiction or any devices intended for implantation in the human body. Should Buyer purchase or use **onsemi** products for any such unintended or unauthorized application, Buyer shall indemnify and hold **onsemi** and its officers, employees, subsidiaries, affiliates, and distributors harmless against all claims, costs, damages, and expenses, and reasonable attorney fees arising out of, directly or indirectly, any claim of personal injury or death associated with such unintended or unauthorized use, even if such claim alleges that **onsemi** was negligent regarding the design or manufacture of the part. **onsemi** is an Equal Opportunity/Affirmative Action Employer. This literature is subject to all applicable copyright laws and is not for resale in any manner.

ADDITIONAL INFORMATION

TECHNICAL PUBLICATIONS:
Technical Library: www.onsemi.com/design/resources/technical−documentation
onsemi Website: www.onsemi.com

ONLINE SUPPORT: www.onsemi.com/support
For additional information, please contact your local Sales Representative at www.onsemi.com/support/sales