2 A Single Load Switch for Low Voltage Rail

NCP456R

The NCP456R is a power load switch with very low Ron NMOSFET controlled by external logic pin, allowing optimization of battery life, and portable device autonomy.

Indeed, thanks to a best in class current consumption optimization with NMOS structure, leakage currents are drastically decreased. Offering optimized leakages isolation on the ICs connected on the battery.

Reverse voltage protection, from OUT to IN is offered in the NCP456R.

Proposed in wide input voltage range from 0.75 V to 5.5 V, and a very small CSP6 0.85 x 1.25 mm^2.

Features

- 0.75 V – 5.5 V Operating Range
- 24 mΩ N MOSFET
- Vbias Rail Input
- DC Current up to 2 A
- Reverse Blocking Option
- Active High EN Pin
- CSP6, 0.85 x 1.25 mm^2, Pitch 0.4 mm
- These Devices are Pb-Free and are RoHS Compliant

Typical Applications

- Notebooks
- Tablets
- Wireless
- Mobile Phones
- Digital Cameras



WLCSP6, 1.25x0.85
CASE 567GZ

MARKING DIAGRAM

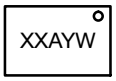

A = Assembly Location
Y = Year
W = Work Week

PIN CONNECTIONS

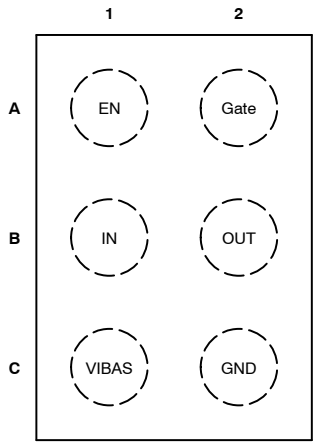

Top View

ORDERING INFORMATION

See detailed ordering, marking and shipping information on page 11 of this data sheet.

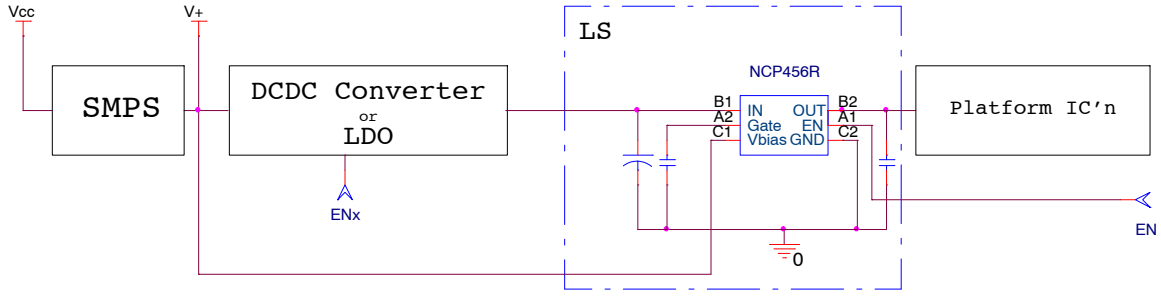

Figure 1. Typical Application Schematic

© Semiconductor Components Industries, LLC, 2014

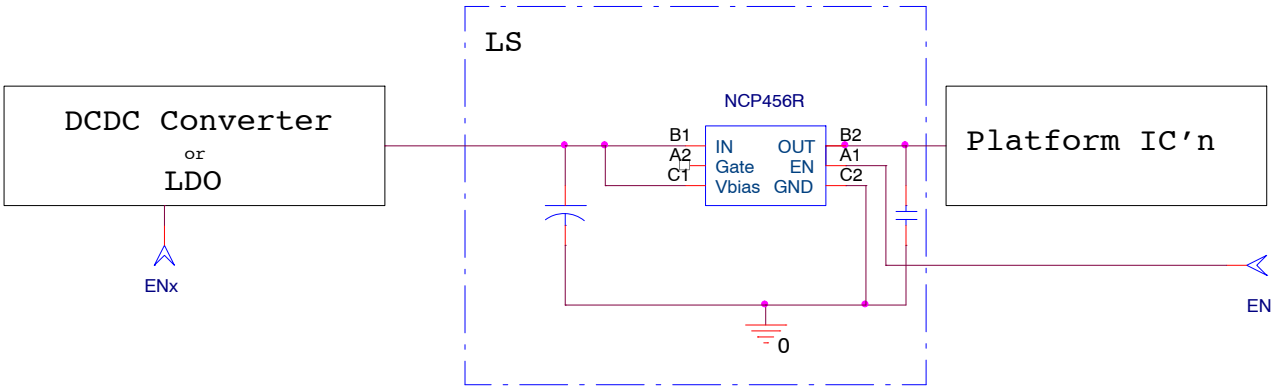

Figure 2. Application Schematic with Vbias Connected to IN and No Gate Delay

PIN FUNCTION DESCRIPTION

Pin Name	Pin Number	Type	Description
EN	A1	INPUT	Enable input, logic high turns on power switch.
IN	B1	POWER	Load-switch input pin.
VBIAS	C1	POWER	External supply voltage input.
GATE	A2	INPUT	OUT pin slew rate control (t_{rise}).
OUT	B2	POWER	Load-switch output pin.
GND	C2	POWER	Ground connection.

Share Feedback
Your Opinion Matters

BLOCK DIAGRAM

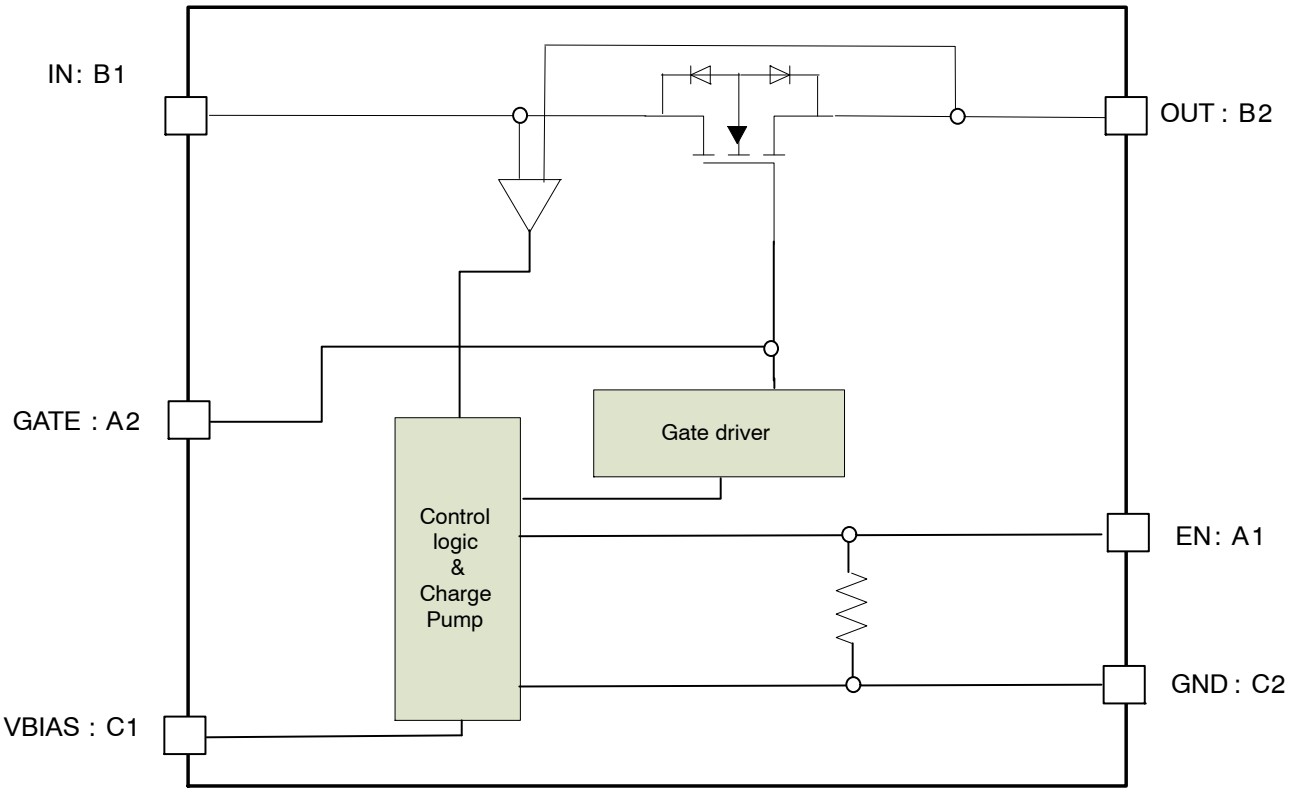

Figure 3. Block Diagram

Share Feedback
Your Opinion Matters

MAXIMUM RATINGS

Rating	Symbol	Value	Unit
IN, OUT, EN, VBIAS, GATE Pins: (Note 1)	V_{EN}, V_{IN}, V_{OUT}, V_{BIAS}, V_{GATE}	−0.3 to + 6.5	V
From IN to OUT Pins: Input/Output (Note 1)	V_{IN}, V_{OUT}	±6.5	V
Human Body Model (HBM) ESD Rating are (Note 2)	ESD HBM	2000	V
Machine Model (MM) ESD Rating are (Note 2)	ESD MM	200	V
Latch-up Protection (Note 3) Pins IN, OUT, EN, VBIAS and GATE	LU	100	mA
Maximum Junction Temperature	T_J	−40 to + 125	°C
Storage Temperature Range	T_{STG}	−40 to + 150	°C
Moisture Sensitivity (Note 4)	MSL	Level 1	

Stresses exceeding those listed in the Maximum Ratings table may damage the device. If any of these limits are exceeded, device functionality should not be assumed, damage may occur and reliability may be affected.

1. According to JEDEC standard JESD22-A108.
2. This device series contains ESD protection and passes the following tests:
   Human Body Model (HBM) ±2.0 kV per JEDEC standard: JESD22-A114 for all pins.
   Machine Model (MM) ±250 V per JEDEC standard: JESD22-A115 for all pins.
3. Latch up Current Maximum Rating: ±100 mA per JEDEC standard: JESD78 class II.
4. Moisture Sensitivity Level (MSL): 1 per IPC/JEDEC standard: J-STD-020.

OPERATING CONDITIONS

Symbol	Parameter	Conditions	Min	Typ	Max	Unit
V_{IN}	Operational Power Supply		0.75		5.5	V
V_{EN}	Enable Voltage		0		5.5	V
V_{BIAS}	Bias voltage (V_{BIAS} ≥ best of V_{IN}, V_{out})		1.2		5.5	V
T_A	Ambient Temperature Range		−40	25	+85	°C
C_{IN}	Decoupling input capacitor		100			nF
C_{OUT}	Decoupling output capacitor		100			nF
$R_{\theta JA}$	Thermal Resistance Junction to Air	CSP6 (Note 5)		100		°C/W
I_{OUT}	Maximum DC current				2	A
P_D	Power Dissipation Rating	(Note 6)		0.2		W

Functional operation above the stresses listed in the Recommended Operating Ranges is not implied. Extended exposure to stresses beyond the Recommended Operating Ranges limits may affect device reliability.

5. The $R_{\theta JA}$ is dependent of the PCB heat dissipation and thermal via.
6. The maximum power dissipation ($_{PD}$) is given by the following formula:

$$P_D = \frac{T_{JMAX} - T_A}{R_{\theta JA}}$$

Share Feedback
Your Opinion Matters

ELECTRICAL CHARACTERISTICS Min & Max Limits apply for T_A between −40 °C to +85 °C for V_{IN} and V_{BIAS} between 0.75 V to 5.5 V (Unless otherwise noted). Typical values are referenced to T_A = + 25 °C, V_{IN} = 3.3 V and V_{BIAS} = 5 V (Unless otherwise noted).

Symbol	Parameter	Conditions		Min	Typ	Max	Unit
POWER SWITCH							
$R_{DS(on)}$	Static drain-source on-state resistance for each rail	V_{IN} = V_{BIAS} = 5.5 V	T_A = 25 °C		24	33	mΩ
			T_J = 125 °C			39	mΩ
		V_{IN} = V_{BIAS} = 3.3 V	T_A = 25 °C		24	33	
			T_J = 125 °C			39	
		V_{IN} = V_{BIAS} = 1.8 V	T_A = 25 °C		25	34	
			T_J = 125 °C			40	
		V_{IN} = V_{BIAS} = 1.5 V	T_A = 25 °C		26	35	
			T_J = 125 °C			41	
		V_{IN} = V_{BIAS} = 1.2 V	T_A = 25 °C		28	40	
			T_J = 125 °C			42	
		V_{IN} = 1.0 V. V_{BIAS} = 1.2 V	T_A = 25 °C		30	40	
			T_J = 125 °C			42	
		V_{IN} = 0.8 V, V_{BIAS} = 1.2 V	T_A = 25 °C		35	45	
			T_J = 125 °C			50	
TIMINGS							
T_R	Output rise time	V_{IN} = 5 V	No cap on GATE pin		0.11		ms
			Gate capacitor = 1 nF		1.4		
			Gate capacitor = 10 nF		15.7		
T_F	Output fall time		C_{LOAD} = 1 μF, R_{LOAD} = 25 Ω (Note 8)		50		μs
T_{en}	Enable time		From EN low to high to V_{out} = 10% of fully on– NCP456R. 10 nF gate capacitor		3		ms
			From EN low to high to V_{out} = 10% of fully on– NCP456R. 1 nF gate capacitor		300		μs
			From EN low to high to V_{out} = 10% of fully on– NCP456R. Without gate capacitor		51		μs
T_R	Output rise time	V_{IN} = 3.3 V	No cap on GATE pin		0.1	0.3	ms
			Gate capacitor = 1 nF		1		
			Gate capacitor = 10 nF		11		
T_F	Output fall time		C_{LOAD} = 1 μF, R_{LOAD} = 25 Ω (Note 8)		60	120	μs
T_{en}	Enable time		From EN low to high to V_{out} = 10% of fully on– NCP456R. 10 nF Gate capacitor.		2.4		ms
			From EN low to high to V_{out} = 10% of fully on– NCP456R. 1 nF Gate capacitor.		230		μs
			From EN low to high to V_{out} = 10% of fully on– NCP456R. Without gate capacitor		50	120	μs

Product parametric performance is indicated in the Electrical Characteristics for the listed test conditions, unless otherwise noted. Product performance may not be indicated by the Electrical Characteristics if operated under different conditions.

7. Parameters are guaranteed for C_{LOAD} and R_{LOAD} connected to the OUT pin with respect to the ground
8. Guaranteed by design and characterization, not production tested.

Share Feedback
Your Opinion Matters

ELECTRICAL CHARACTERISTICS Min & Max Limits apply for T_A between −40 °C to +85 °C for V_{IN} and V_{BIAS} between 0.75 V to 5.5 V (Unless otherwise noted). Typical values are referenced to T_A = + 25 °C, V_{IN} = 3.3 V and V_{BIAS} = 5 V (Unless otherwise noted). (continued)

Symbol	Parameter	Conditions		Min	Typ	Max	Unit
TIMINGS							
T_R	Output rise time	V_{IN} = 1.8 V	No cap on GATE pin		0.06		ms
			Gate capacitor = 1 nF		0.6		
			Gate capacitor = 10 nF		6		
T_F	Output fall time		C_{LOAD} = 1 μF, R_{LOAD} = 25 Ω (Note 8)		35		μs
T_{en}	Enable time		From EN low to high to V_{out} = 10% of fully on– 10 nF Gate capacitor		1.8		ms
			From EN low to high to V_{out} = 10% of fully on– 1 nF Gate capacitor		180		μs
			From EN low to high to V_{out} = 10% of fully on– NCP456R. Without gate capacitor		42		μs
T_R	Output rise time	V_{IN} = 1 V	No cap on GATE pin		0.04		ms
			Gate capacitor = 1 nF		0.35		
			Gate capacitor = 10 nF		3.5		
T_F	Output fall time		C_{LOAD} = 1 μF, R_{LOAD} = 25 Ω (Note 8)		20		μs
T_{en}	Enable time		From EN low to high to V_{out} = 10% of fully on– NCP456R. 1 nF gate capacitor		140		μs
			From EN low to high to V_{out} = 10% of fully on– NCP456R. Without gate capacitor		40		μs
LOGIC							
V_{IH}	High-level input voltage			0.9			V
V_{IL}	Low-level input voltage					0.4	V
R_{EN}	Pull down resistor			3		7	MΩ
REVERSE CURRENT BLOCKING							
V_{rev_thr}	Reverse threshold	V_{out}–V_{in}			32		mV
V_{rev_hyst}	Reverse threshold hysteresis				50		mV
T_{rev}	Reverse comparator response time	V_{out}–V_{in} > V_{rev_thr}			2.5		μs
QUIESCENT CURRENT							
I_{VBIAS}	Bias current for charge pump	V_{BIAS} = 3.3 V, EN = high			1.5	6	μA
I_{IN}	IN Current consumption	EN = high			0.01	0.3	μA
I_{STB}	Standby current IN	EN = low, IN standby current, V_{IN} = 3.3 V			0.01	0.3	μA

Product parametric performance is indicated in the Electrical Characteristics for the listed test conditions, unless otherwise noted. Product performance may not be indicated by the Electrical Characteristics if operated under different conditions.

7. Parameters are guaranteed for C_{LOAD} and R_{LOAD} connected to the OUT pin with respect to the ground
8. Guaranteed by design and characterization, not production tested.

Share Feedback
Your Opinion Matters

ELECTRICAL CHARACTERISTICS Min & Max Limits apply for T_A between −40 °C to +85 °C for V_{IN} and V_{BIAS} between 0.75 V to 5.5 V (Unless otherwise noted). Typical values are referenced to T_A = + 25 °C, V_{IN} = 3.3 V and V_{BIAS} = 5 V (Unless otherwise noted). (continued)

Symbol	Parameter	Conditions	Min	Typ	Max	Unit
QUIESCENT CURRENT						
$I_{STDVbias}$	Standby current V_{BIAS}	V_{BIAS} = 3.3 V EN = low		0.4	2	μA
I_{out_leak}	Output leakage current	IN connected to GND, V_{OUT} = 5 V		0.01	0.5	μA

Product parametric performance is indicated in the Electrical Characteristics for the listed test conditions, unless otherwise noted. Product performance may not be indicated by the Electrical Characteristics if operated under different conditions.

7. Parameters are guaranteed for C_{LOAD} and R_{LOAD} connected to the OUT pin with respect to the ground
8. Guaranteed by design and characterization, not production tested.

TIMINGS

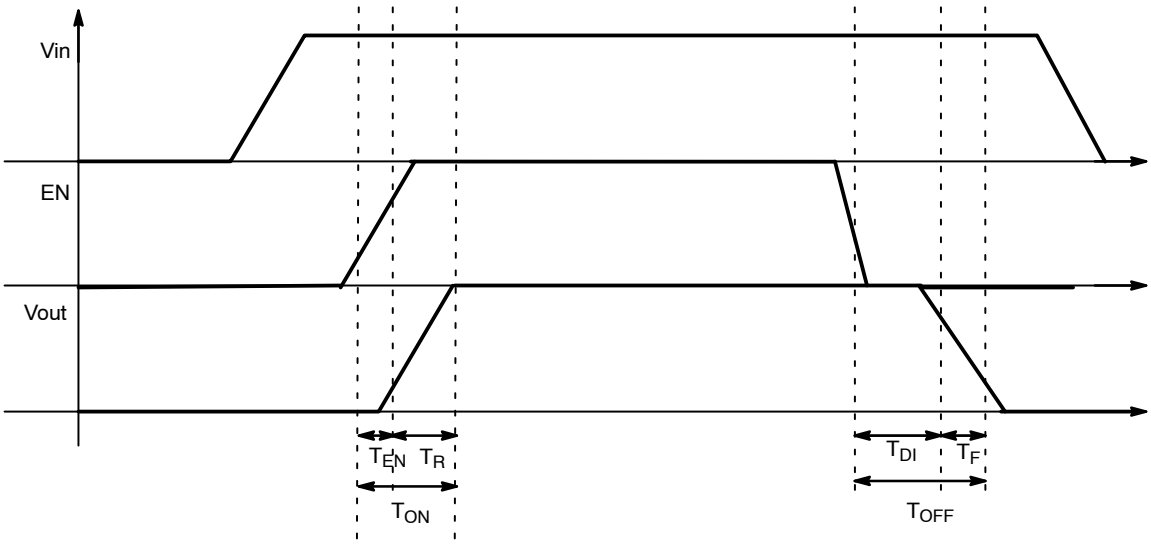

Figure 4. Enable, Rise and Fall Time

Share Feedback
Your Opinion Matters

TYPICAL CHARACTERISTICS

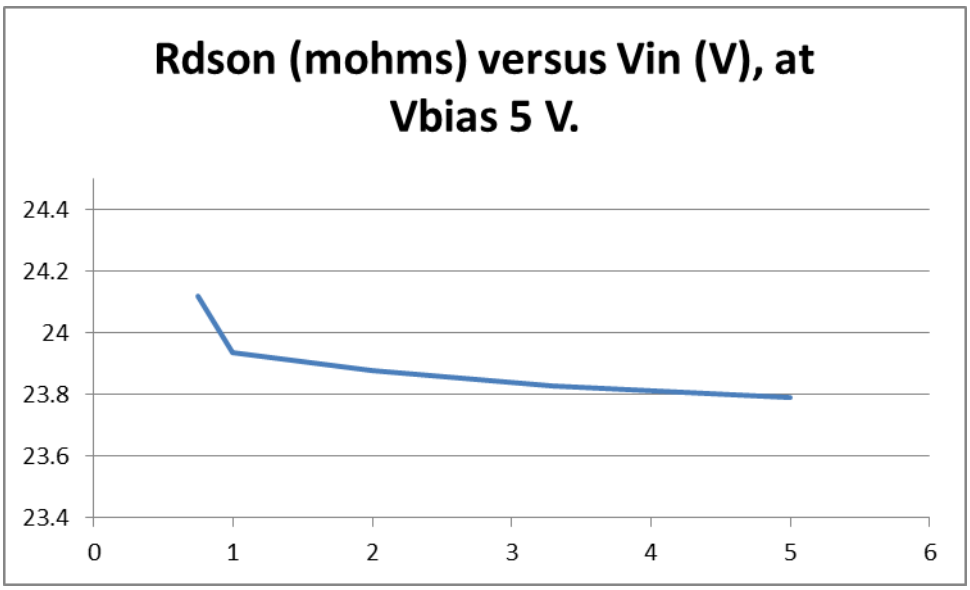

Figure 5. $R_{DS(on)}$ versus V_{in}, Room Temperature, Vbias 5 V

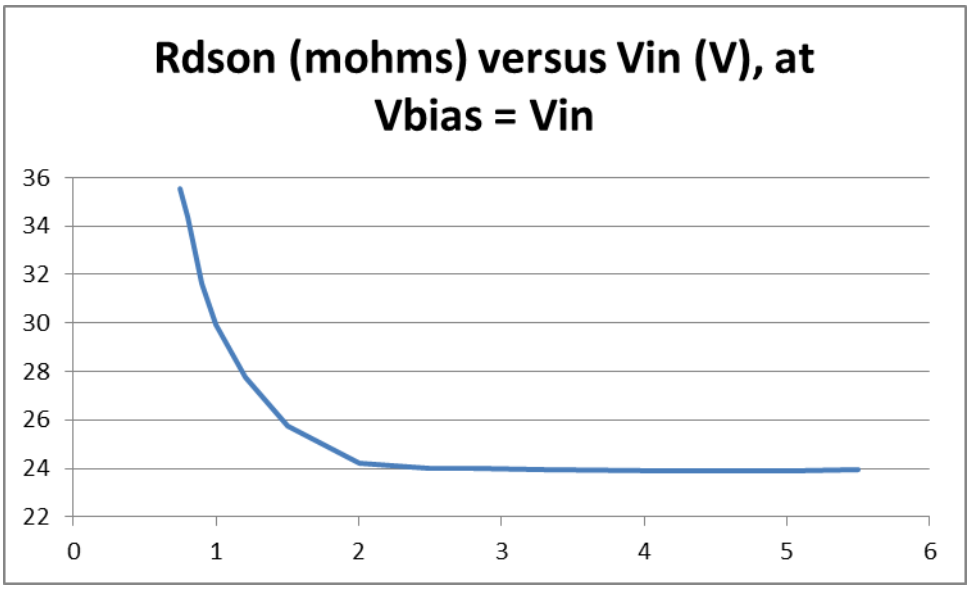

Figure 6. $R_{DS(on)}$ versus V_{in}, Room Temperature, Vbias Connected to V_{in}

Share Feedback
Your Opinion Matters

FUNCTIONAL DESCRIPTION

Overview

The NCP456R is a high side N Channel MOSFET power distribution switch designed to isolate ICs connected on the battery or DCDC supplies in order to save energy. The part can be used with a wide range of supply from 0.75 V to 5.5 V.

Enable input

Enable pin is an active high. The path is opened when EN pin is tied low (disable), forcing NMOS switch off.

The IN/OUT path is activated with a minimum of V_{BIAS} ≥ best of $V_{IN,}$ V_{OUT} = 0.75 V and EN forced to high level.

V_{BIAS} Rail

The core of the IC is supplied due to V_{BIAS} supply rail (common +5 V, 3.3 V, 1.8 V, 1.2 V ...etc). Indeed, no current consumption is used on IN pin, allowing to improve power saving of the rail that must be isolated by the power switch.

If Vbias rail is not available or used, Vbias pin and Vin pin can be connected togheter as close as possible the DUT.

Output Rise Time – Gate Control

The NMOS is control with internal charge pump and driver. A minimum gate slew rate is internally set to avoid huge inrush current when EN is set from low to high. The default gate slew rate depends on Vin level. The higher Vin level, the longer rise time.

In addition, an external capacitor can be connected between Gate pin and GND in order to slow down the gate rising. See electrical table for more details.

Cin and Cout Capacitors

100 nF external capacitors must be connected as close as possible the DUT for noise immunity and better stability. In case of input hot plug (input voltage connected with fast slew rate – few μs – it's strongly recommended to avoid big capacitor connected on the input. That allows to avoid input over voltage transients.

Reverse Blocking Control

A reverse blocking control circuitry is embedded to eliminate leakages from OUT to IN in case of Vout>Vin.

A comparator measures the dropout voltage on the switch between OUT and IN and turn off the NMOS if this voltage exceeds specified reverse voltage. This comparator is available whatever the EN pin level.

APPLICATION INFORMATION

Power Dissipation

Main contributor in term of junction temperature is the power dissipation of the power MOSFET. Assuming this, the power dissipation and the junction temperature in normal mode can be calculated with the following equations:

$$P_D = R_{DS(on)} \times (I_{out})^2 \quad \text{(eq. 1)}$$

P_D = Power dissipation (W)
$R_{DS(on)}$ = Power MOSFET on resistance (Ω)
I_{out} = Output current (A)

$$T_J = R_D \times R_{\theta JA} + T_A \quad \text{(eq. 2)}$$

T_J = Junction temperature (°C)
$R_{\theta JA}$ = Package thermal resistance (°C/W)
T_A = Ambient temperature (°C)

Demoboard

The NCP456R integrates a 2 A rated NMOS FET, and the PCB rules must be respected to properly evacuate the heat out of the silicon.

The package is a CSP and due to the low thermal resistance of the silicon, all the balls can be used to improved power dissipation. Indeed, even if the power crosses the IN / OUT pins only, all the balls around this power area should be connected to the larger PCB area.

In the below PCB example (application demonstration board), all the PCB areas connected to 6 balls are enlarged. In addition vias are connected to bottom side with exactly same form factor of the other PCB side.

Additional improvements can be done also by using more copper thickness and the thinner epoxy as possible.

Share Feedback
Your Opinion Matters

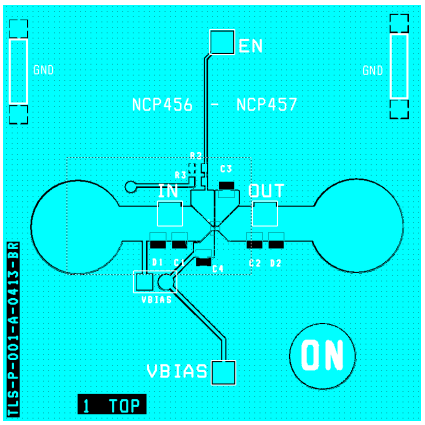

Figure 7. PCB Top View

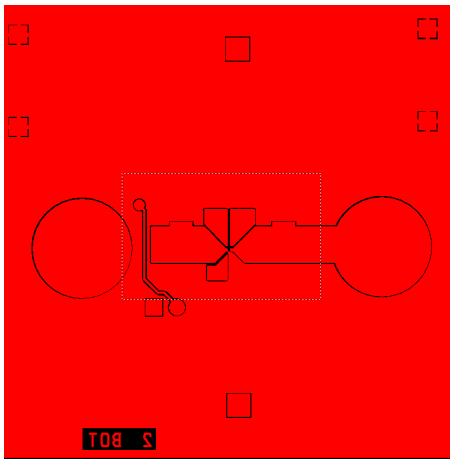

Figure 8. PCB Bottom View

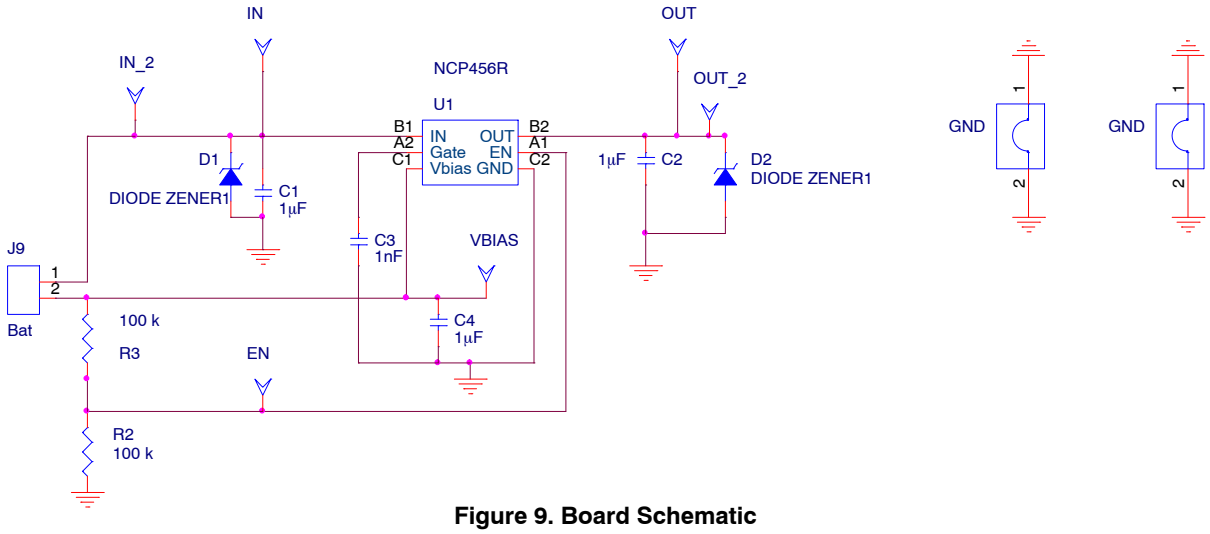

Figure 9. Board Schematic

Share Feedback
Your Opinion Matters

BILL OF MATERIAL

Quantity	Reference schem	Part description	Part number	Manufacturer
2	IN, OUT	Socket, 4mm, metal, PK5	B010	HIRSCHMANN
4	IN_2, OUT_2, VBIAS, EN	HEADER200	2.54 mm, 77313-101-06LF	FC
1	J9 (Bat)	HEADER200-2	2.54 mm, 77313-101-06LF	FC
3	C1, C2, C4	1uF	GRM155R70J105KA12#	Murata
1	C3	1nF, Not mounted	GRM188R60J102ME47#	Murata
1	D1, D2	TVS	ESD9x	**onsemi**
2	GND2,GND	GND JUMPER	D3082F05	Harvin
2	R2, R3	Resistor 100k 0603	MC 0.063 0603 1% 100K	MULTICOMP
1	U1	Load switch	NCP456 - 457	**onsemi**

ORDERING INFORMATION

Device	Options	Marking	Package	Shipping
NCP456RFCCT2G	Reverse Voltage Protection	56dYW	WLCSP 1.25 x 0.85 mm (Pb-Free)	3000 Tape / Reel

† For information on tape and reel specifications, including part orientation and tape sizes, please refer to our Tape and Reel Packaging Specifications Brochure, BRD8011/D.

Share Feedback
Your Opinion Matters

REVISION HISTORY

Revision	Description of Changes	Date
3	Rebranded the Data Sheet to **onsemi** format.	1/29/2026

This document has undergone updates prior to the inclusion of this revision history table. The changes tracked here only reflect updates made on the noted approval dates.

Share Feedback
Your Opinion Matters

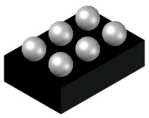

WLCSP6 1.25x0.85x0.559
CASE 567GZ
ISSUE C

DATE 16 JUN 2022

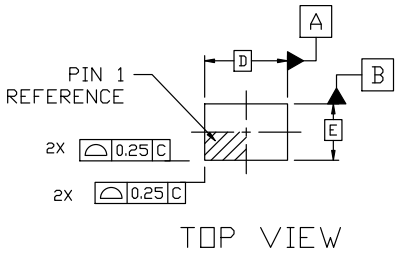

TOP VIEW

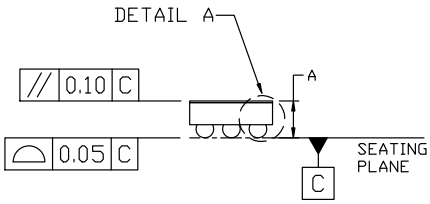

SIDE VIEW

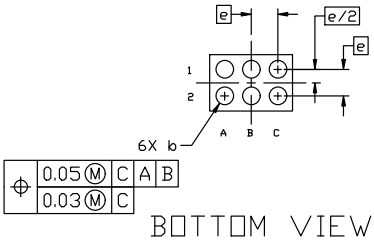

BOTTOM VIEW

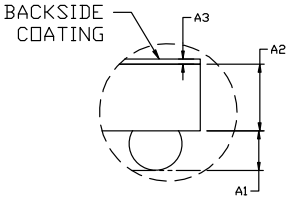

DETAIL A
SCALE 1:3

NOTES:

1. DIMENSIONING AND TOLERANCING PER ASME Y14.5M, 2009.
2. CONTROLLING DIMENSION: MILLIMETERS
3. DIMENSION b IS MEASURED AT THE MAXIMUM SOLDER BALL DIAMETER PARALLEL TO DATUM C.
4. COPLANARITY APPLIES TO THE SPHERICAL CROWNS OF THE SOLDER BALLS.
5. DATUM C, THE SEATING PLANE, IS DEFINED BY THE SPHERICAL CROWNS OF THE SOLDER BALLS.

DIM	MILLIMETERS		
	MIN.	NOM.	MAX.
A	0.509	0.559	0.609
A1	0.174	0.199	0.224
A2	0.310	0.335	0.360
A3		0.025 BSC	
b	0.240	0.265	0.290
D		1.25 BSC	
E		0.85 BSC	
e		0.40 BSC	

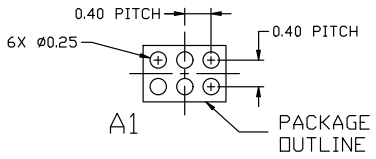

RECOMMENDED
MOUNTING FOOTPRINT*

* For additional information on our Pb-Free strategy and soldering details, please download the ON Semiconductor Soldering and Mounting Techniques Reference Manual, SOLDERRM/D.

GENERIC
MARKING DIAGRAM*

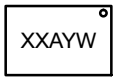

A = Assembly Location
Y = Year
W = Work Week

*This information is generic. Please refer to device data sheet for actual part marking. Pb−Free indicator, “G” or microdot “▪”, may or may not be present. Some products may not follow the Generic Marking.

DOCUMENT NUMBER:	**98AON89059E**	Electronic versions are uncontrolled except when accessed directly from the Document Repository. Printed versions are uncontrolled except when stamped “CONTROLLED COPY” in red.
DESCRIPTION:	**WLCSP6 1.25x0.85x0.559**	**PAGE 1 OF 1**

onsemi and ONSEMI are trademarks of Semiconductor Components Industries, LLC dba **onsemi** or its subsidiaries in the United States and/or other countries. **onsemi** reserves the right to make changes without further notice to any products herein. **onsemi** makes no warranty, representation or guarantee regarding the suitability of its products for any particular purpose, nor does **onsemi** assume any liability arising out of the application or use of any product or circuit, and specifically disclaims any and all liability, including without limitation special, consequential or incidental damages. **onsemi** does not convey any license under its patent rights nor the rights of others.

© Semiconductor Components Industries, LLC, 2013

onsemi, , and other names, marks, and brands are registered and/or common law trademarks of Semiconductor Components Industries, LLC dba "**onsemi**" or its affiliates and/or subsidiaries in the United States and/or other countries. **onsemi** owns the rights to a number of patents, trademarks, copyrights, trade secrets, and other intellectual property. A listing of **onsemi**'s product/patent coverage may be accessed at www.onsemi.com/site/pdf/Patent−Marking.pdf. **onsemi** reserves the right to make changes at any time to any products or information herein, without notice. The information herein is provided "as−is" and **onsemi** makes no warranty, representation or guarantee regarding the accuracy of the information, product features, availability, functionality, or suitability of its products for any particular purpose, nor does **onsemi** assume any liability arising out of the application or use of any product or circuit, and specifically disclaims any and all liability, including without limitation special, consequential or incidental damages. Buyer is responsible for its products and applications using **onsemi** products, including compliance with all laws, regulations and safety requirements or standards, regardless of any support or applications information provided by **onsemi**. "Typical" parameters which may be provided in **onsemi** data sheets and/or specifications can and do vary in different applications and actual performance may vary over time. All operating parameters, including "Typicals" must be validated for each customer application by customer's technical experts. **onsemi** does not convey any license under any of its intellectual property rights nor the rights of others. **onsemi** products are not designed, intended, or authorized for use as a critical component in life support systems or any FDA Class 3 medical devices or medical devices with a same or similar classification in a foreign jurisdiction or any devices intended for implantation in the human body. Should Buyer purchase or use **onsemi** products for any such unintended or unauthorized application, Buyer shall indemnify and hold **onsemi** and its officers, employees, subsidiaries, affiliates, and distributors harmless against all claims, costs, damages, and expenses, and reasonable attorney fees arising out of, directly or indirectly, any claim of personal injury or death associated with such unintended or unauthorized use, even if such claim alleges that **onsemi** was negligent regarding the design or manufacture of the part. **onsemi** is an Equal Opportunity/Affirmative Action Employer. This literature is subject to all applicable copyright laws and is not for resale in any manner.

ADDITIONAL INFORMATION

TECHNICAL PUBLICATIONS:
Technical Library: www.onsemi.com/design/resources/technical−documentation
onsemi Website: www.onsemi.com

ONLINE SUPPORT: www.onsemi.com/support
For additional information, please contact your local Sales Representative at www.onsemi.com/support/sales