# Voltage Regulator – Adjustable Output, Positive 1.5 A

# LM317, NCV317

The LM317 is an adjustable 3−terminal positive voltage regulator capable of supplying in excess of 1.5 A over an output voltage range of 1.2 V to 37 V. This voltage regulator is exceptionally easy to use and requires only two external resistors to set the output voltage. Further, it employs internal current limiting, thermal shutdown and safe area compensation, making it essentially blow−out proof.

The LM317 serves a wide variety of applications including local, on card regulation. This device can also be used to make a programmable output regulator, or by connecting a fixed resistor between the adjustment and output, the LM317 can be used as a precision current regulator.

### Features

- Output Current in Excess of 1.5 A
- Output Adjustable between 1.2 V and 37 V
- Internal Thermal Overload Protection
- Internal Short Circuit Current Limiting Constant with Temperature
- Output Transistor Safe−Area Compensation
- Floating Operation for High Voltage Applications
- Eliminates Stocking many Fixed Voltages
- Available in Surface Mount D$^2$PAK−3, and Standard 3−Lead Transistor Package
- NCV Prefix for Automotive and Other Applications Requiring Unique Site and Control Change Requirements; AEC−Q100 Qualified and PPAP Capable
- These Devices are Pb−Free, Halogen Free/BFR Free and are RoHS Compliant

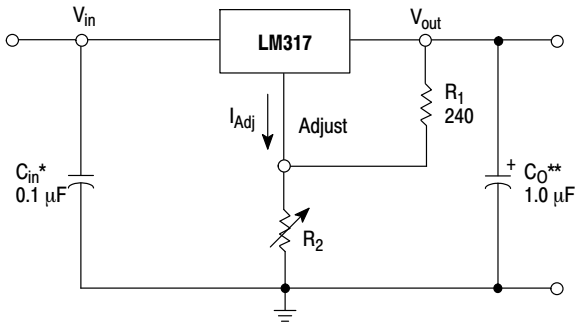


* $C_{in}$ is required if regulator is located an appreciable distance from power supply filter.
** $C_O$ is not needed for stability, however, it does improve transient response.

$$V_{out} = 1.25\ V\left(1 + \frac{R_2}{R_1}\right) + I_{Adj} R_2$$

Since $I_{Adj}$ is controlled to less than 100 μA, the error associated with this term is negligible in most applications.

**Figure 1. Standard Application**

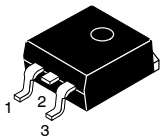


**D$^2$PAK−3**
**D2T SUFFIX**
**CASE 936**

Heatsink surface (shown as terminal 4 in case outline drawing) is connected to Pin 2.

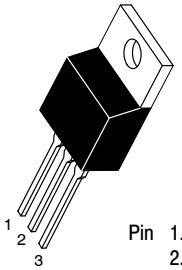


**TO−220**
**T SUFFIX**
**CASE 221AB**

Pin 1. Adjust
2. $V_{out}$
3. $V_{in}$

Heatsink surface connected to Pin 2.

### ORDERING INFORMATION

See detailed ordering and shipping information in the package dimensions section on page 10 of this data sheet.

### DEVICE MARKING INFORMATION

See general marking information in the device marking section on page 10 of this data sheet.

© Semiconductor Components Industries, LLC, 2016

## MAXIMUM RATINGS

| Rating | Symbol | Value | Unit |
|---|---|---|---|
| Input−Output Voltage Differential | $V_I-V_O$ | −0.3 to 40 | Vdc |
| Power Dissipation | | | |
| Case 221A | | | |
| $T_A$ = +25°C | $P_D$ | Internally Limited | W |
| Thermal Resistance, Junction−to−Ambient | $\theta_{JA}$ | 65 | °C/W |
| Thermal Resistance, Junction−to−Case | $\theta_{JC}$ | 5.0 | °C/W |
| Case 936 ($D^2PAK$−3) | | | |
| $T_A$ = +25°C | $P_D$ | Internally Limited | W |
| Thermal Resistance, Junction−to−Ambient | $\theta_{JA}$ | 70 | °C/W |
| Thermal Resistance, Junction−to−Case | $\theta_{JC}$ | 5.0 | °C/W |
| Operating Junction Temperature Range | $T_J$ | −55 to +150 | °C |
| Storage Temperature Range | $T_{stg}$ | −65 to +150 | °C |

Stresses exceeding those listed in the Maximum Ratings table may damage the device. If any of these limits are exceeded, device functionality should not be assumed, damage may occur and reliability may be affected.

## ELECTRICAL CHARACTERISTICS

($V_I-V_O$ = 5.0 V; $I_O$ = 0.5 A for D2T and T packages; $T_J = T_{low}$ to $T_{high}$ (Note 1); $I_{max}$ and $P_{max}$ (Note 2); unless otherwise noted.)

| Characteristics | Figure | Symbol | Min | Typ | Max | Unit |
|---|---|---|---|---|---|---|
| Line Regulation (Note 3), $T_A$ = +25°C, 3.0 V ≤ $V_I-V_O$ ≤ 40 V | 1 | $Reg_{line}$ | – | 0.01 | 0.04 | %/V |
| Load Regulation (Note 3), $T_A$ = +25°C, 10 mA ≤ $I_O$ ≤ $I_{max}$ | 2 | $Reg_{load}$ | | | | |
| $V_O$ ≤ 5.0 V | | | – | 5.0 | 25 | mV |
| $V_O$ ≥ 5.0 V | | | – | 0.1 | 0.5 | % $V_O$ |
| Thermal Regulation, $T_A$ = +25°C (Note 4), 20 ms Pulse | – | $Reg_{therm}$ | – | 0.03 | 0.07 | % $V_O$/W |
| Adjustment Pin Current | 3 | $I_{Adj}$ | – | 50 | 100 | μA |
| Adjustment Pin Current Change, 2.5 V ≤ $V_I-V_O$ ≤ 40 V, 10 mA ≤ $I_L$ ≤ $I_{max}$, $P_D$ ≤ $P_{max}$ | 1, 2 | $\Delta I_{Adj}$ | – | 0.2 | 5.0 | μA |
| Reference Voltage, 3.0 V ≤ $V_I-V_O$ ≤ 40 V, 10 mA ≤ $I_O$ ≤ $I_{max}$, $P_D$ ≤ $P_{max}$ | 3 | $V_{ref}$ | 1.2 | 1.25 | 1.3 | V |
| Line Regulation (Note 3), 3.0 V ≤ $V_I-V_O$ ≤ 40 V | 1 | $Reg_{line}$ | – | 0.02 | 0.07 | %/V |
| Load Regulation (Note 3), 10 mA ≤ $I_O$ ≤ $I_{max}$ | 2 | $Reg_{load}$ | | | | |
| $V_O$ ≤ 5.0 V | | | – | 20 | 70 | mV |
| $V_O$ ≥ 5.0 V | | | – | 0.3 | 1.5 | % $V_O$ |
| Temperature Stability ($T_{low} \le T_J \le T_{high}$) | 3 | $T_S$ | – | 0.7 | – | % $V_O$ |
| Minimum Load Current to Maintain Regulation ($V_I-V_O$ = 40 V) | 3 | $I_{Lmin}$ | – | 3.5 | 10 | mA |
| Maximum Output Current | 3 | $I_{max}$ | | | | A |
| $V_I-V_O$ ≤ 15 V, $P_D$ ≤ $P_{max}$, T Package | | | 1.5 | 2.2 | – | |
| $V_I-V_O$ = 40 V, $P_D$ ≤ $P_{max}$, $T_A$ = +25°C, T Package | | | 0.15 | 0.4 | – | |
| RMS Noise, % of $V_O$, $T_A$ = +25°C, 10 Hz ≤ f ≤ 10 kHz | – | N | – | 0.003 | – | % $V_O$ |
| Ripple Rejection, $V_O$ = 10 V, f = 120 Hz (Note 5) | 4 | RR | | | | dB |
| Without $C_{Adj}$ | | | – | 65 | – | |
| $C_{Adj}$ = 10 μF | | | 66 | 80 | – | |
| Thermal Shutdown (Note 6) | – | – | – | 180 | – | °C |
| Long−Term Stability, $T_J = T_{high}$ (Note 7), $T_A$ = +25°C for Endpoint Measurements | 3 | S | – | 0.3 | 1.0 | %/1.0 kHrs. |
| Thermal Resistance Junction−to−Case, T Package | – | $R_{\theta JC}$ | – | 5.0 | – | °C/W |

1. $T_{low}$ to $T_{high}$ = 0° to +125°C, for LM317T, D2T. $T_{low}$ to $T_{high}$ = −40° to +125°C, for LM317BT, BD2T, $T_{low}$ to $T_{high}$ = −55° to +150°C, for NCV317BT, BD2T.
2. $I_{max}$ = 1.5 A, $P_{max}$ = 20 W
3. Load and line regulation are specified at constant junction temperature. Changes in $V_O$ due to heating effects must be taken into account separately. Pulse testing with low duty cycle is used.
4. Power dissipation within an IC voltage regulator produces a temperature gradient on the die, affecting individual IC components on the die. These effects can be minimized by proper integrated circuit design and layout techniques. Thermal Regulation is the effect of these temperature gradients on the output voltage and is expressed in percentage of output change per watt of power change in a specified time.
5. $C_{Adj}$, when used, is connected between the adjustment pin and ground.
6. Thermal characteristics are not subject to production test.
7. Since Long−Term Stability cannot be measured on each device before shipment, this specification is an engineering estimate of average stability from lot to lot.



Share Feedback
Your Opinion Matters

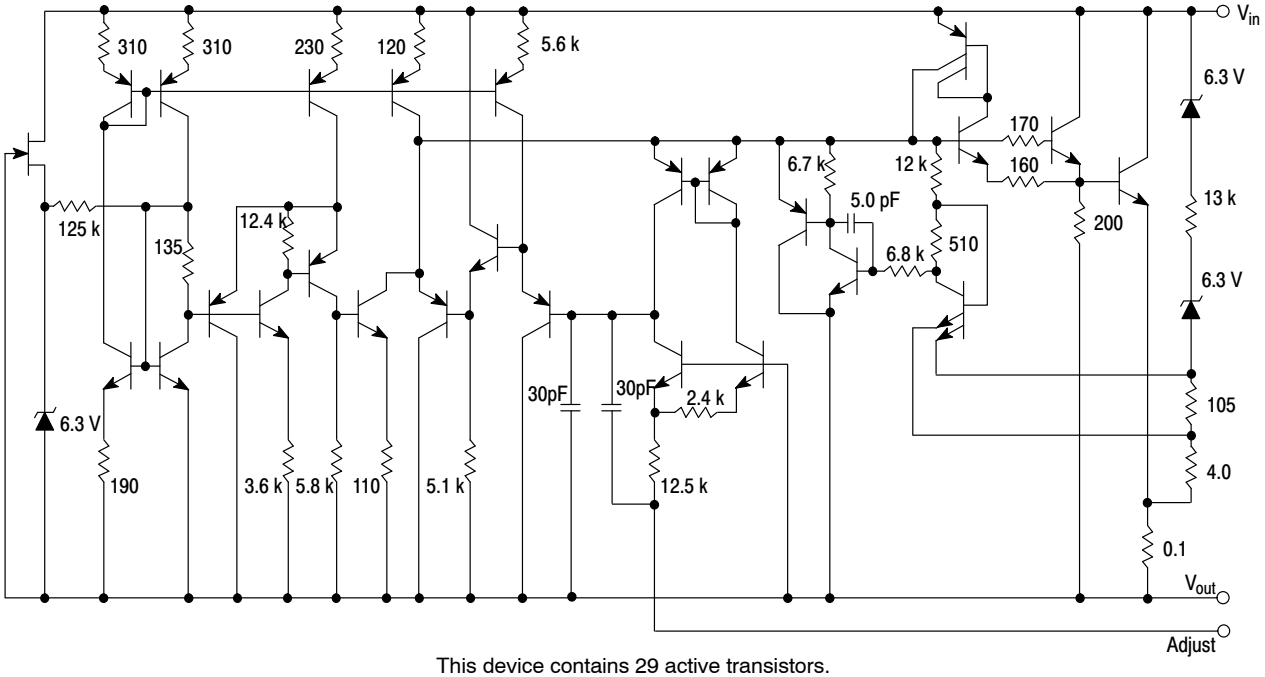


This device contains 29 active transistors.

**Figure 2. Representative Schematic Diagram**

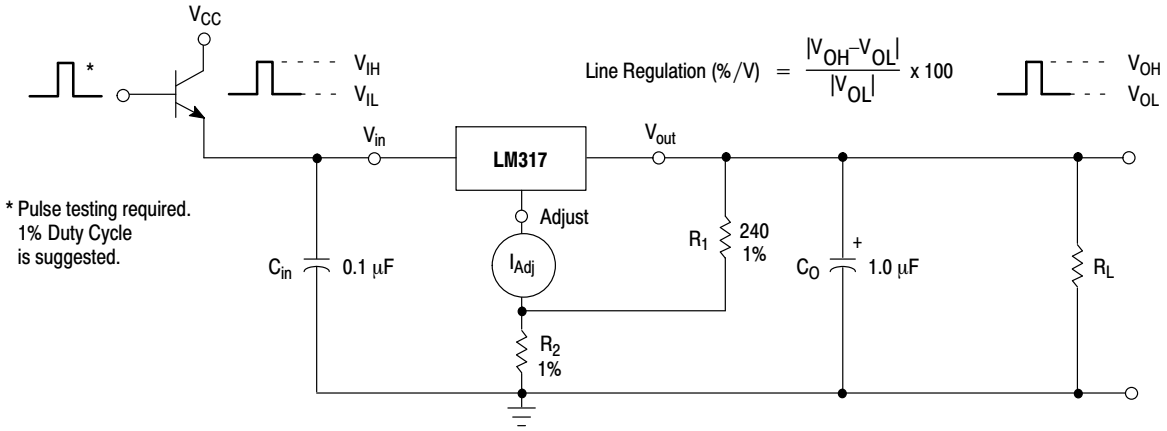


**Figure 3. Line Regulation and $\Delta I_{Adj}$/Line Test Circuit**



Share Feedback
Your Opinion Matters

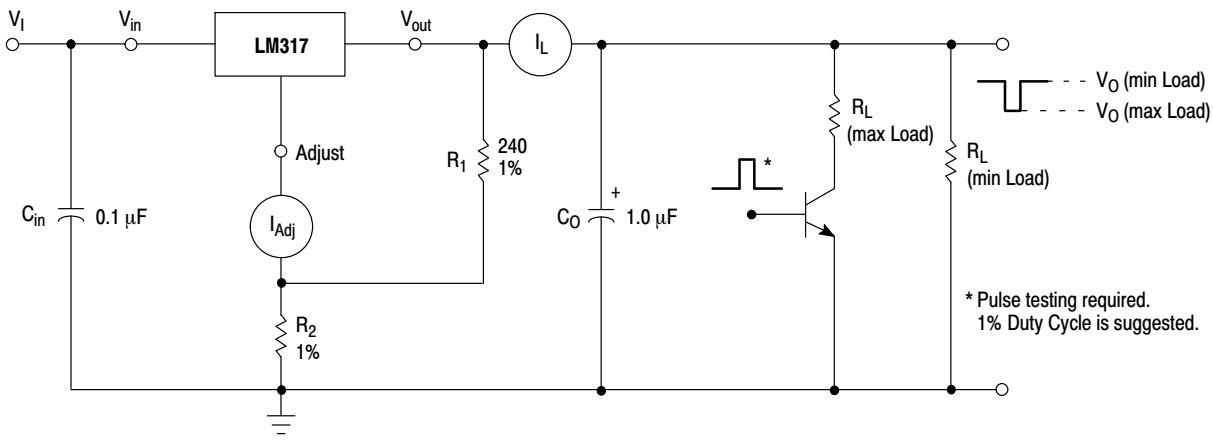


Load Regulation (mV) = $V_O$ (min Load) − $V_O$ (max Load)

$$\text{Load Regulation (\% } V_O) = \frac{V_O \text{ (min Load)} - V_O \text{ (max Load)}}{V_O \text{ (min Load)}} \times 100$$

**Figure 4. Load Regulation and $\Delta I_{Adj}$/Load Test Circuit**

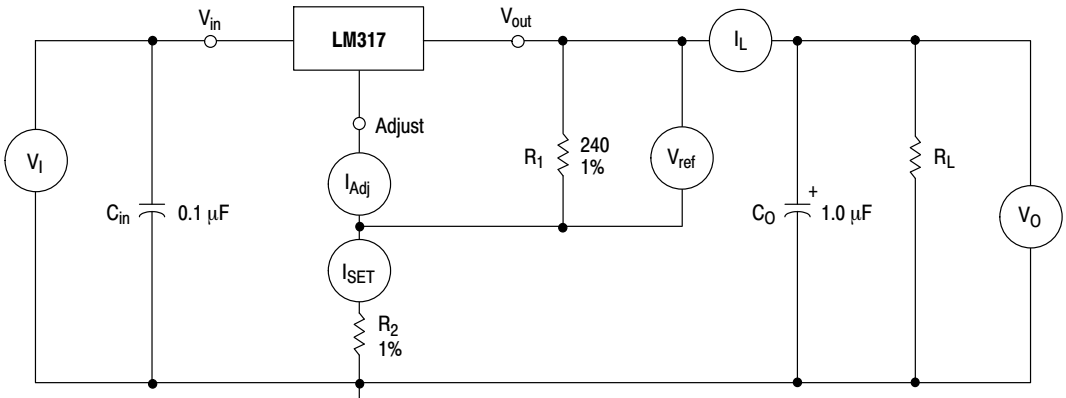


* Pulse testing required.
1% Duty Cycle is suggested.

To Calculate $R_2$: $V_{out} = I_{SET} R_2 + 1.250$ V
Assume $I_{SET} = 5.25$ mA

**Figure 5. Standard Test Circuit**

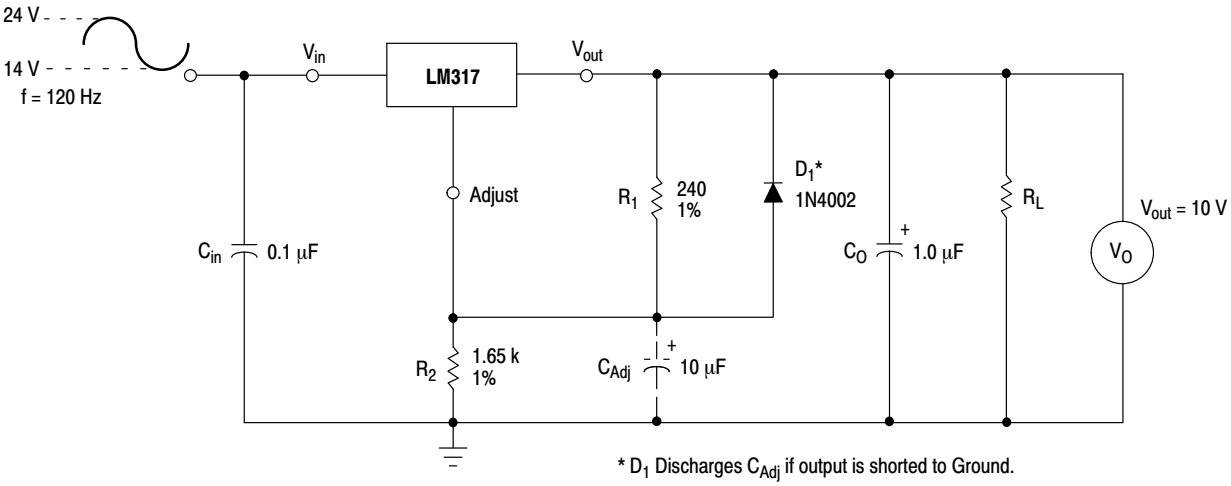


* $D_1$ Discharges $C_{Adj}$ if output is shorted to Ground.

**Figure 6. Ripple Rejection Test Circuit**



Share Feedback
Your Opinion Matters

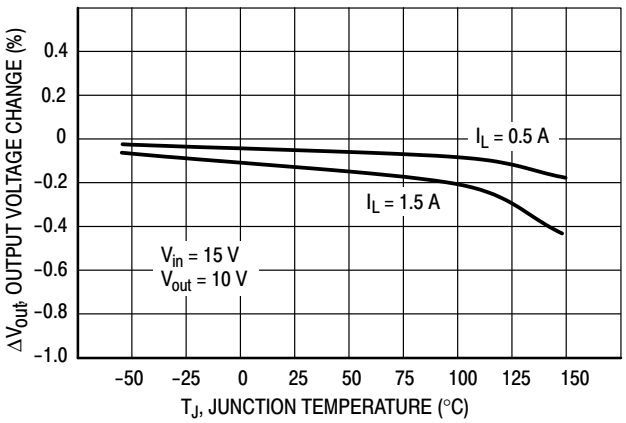


**Figure 7. Load Regulation**

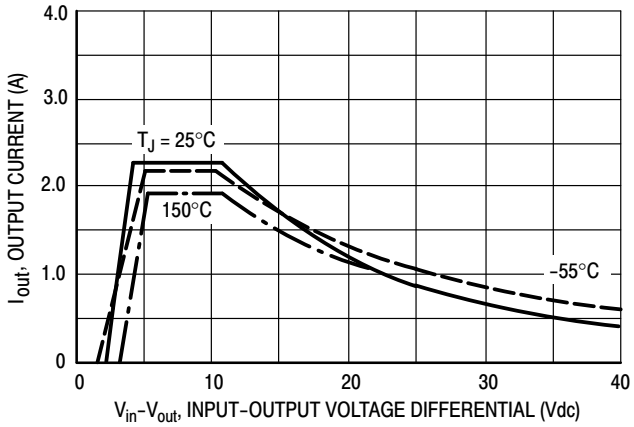


**Figure 8. Current Limit**

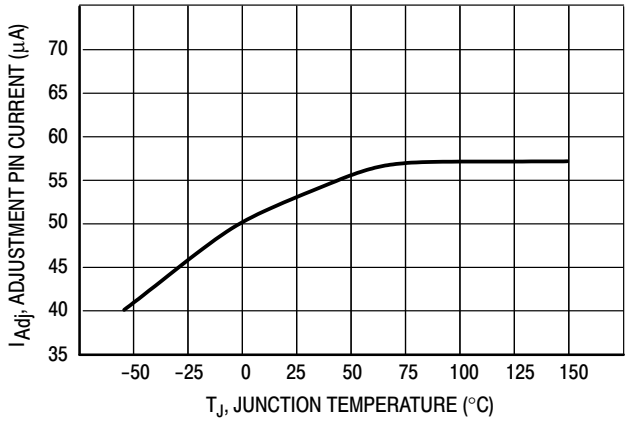


**Figure 9. Adjustment Pin Current**

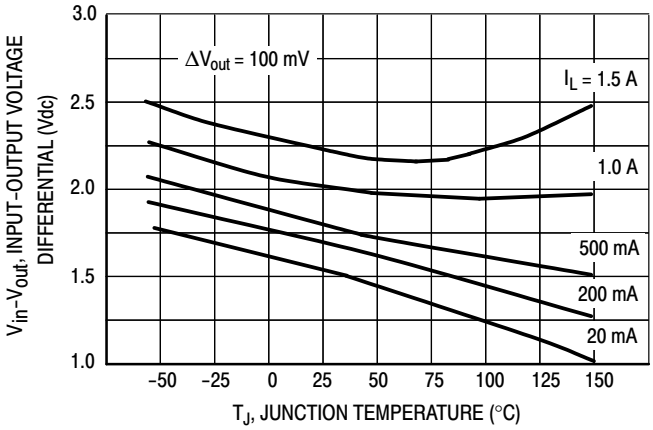


**Figure 10. Dropout Voltage**

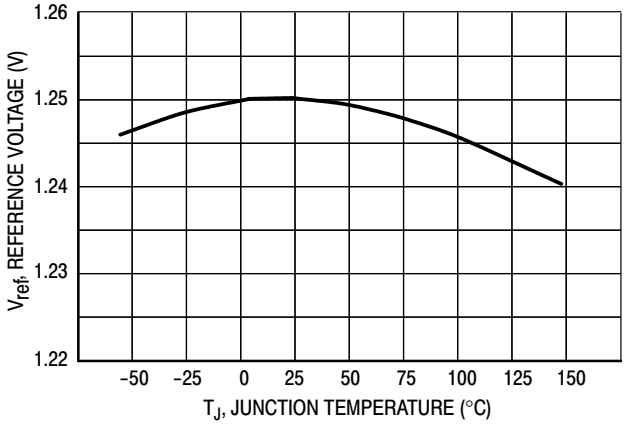


**Figure 11. Temperature Stability**

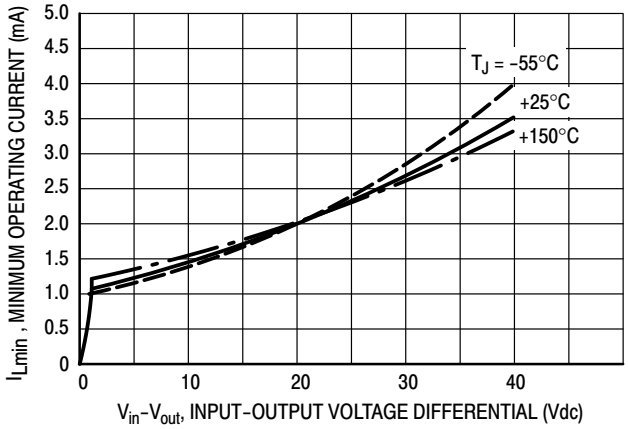


**Figure 12. Minimum Operating Current**



Share Feedback
Your Opinion Matters

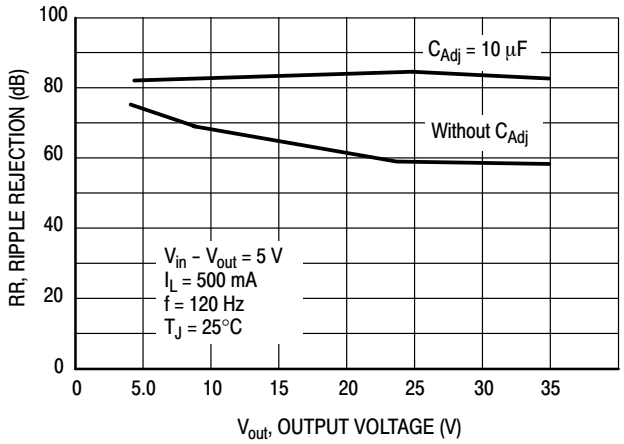


**Figure 13. Ripple Rejection versus Output Voltage**

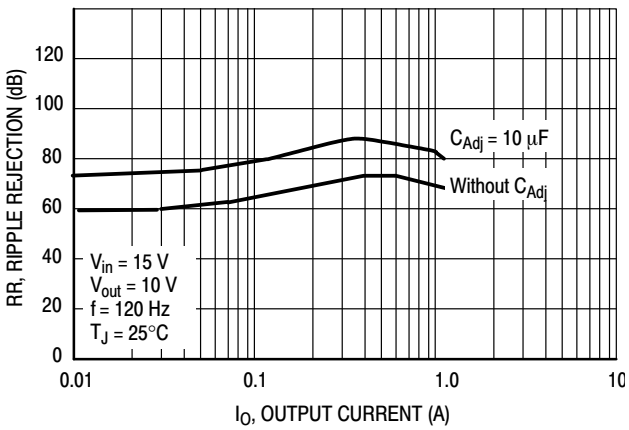


**Figure 14. Ripple Rejection versus Output Current**

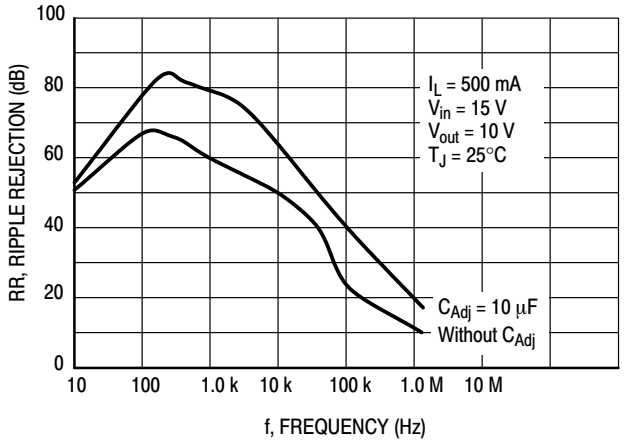


**Figure 15. Ripple Rejection versus Frequency**

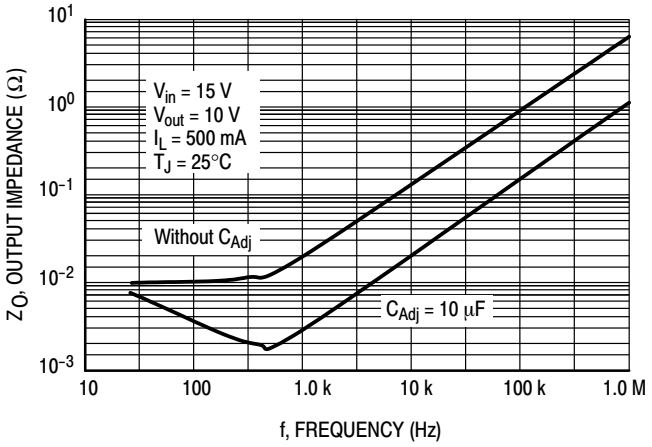


**Figure 16. Output Impedance**

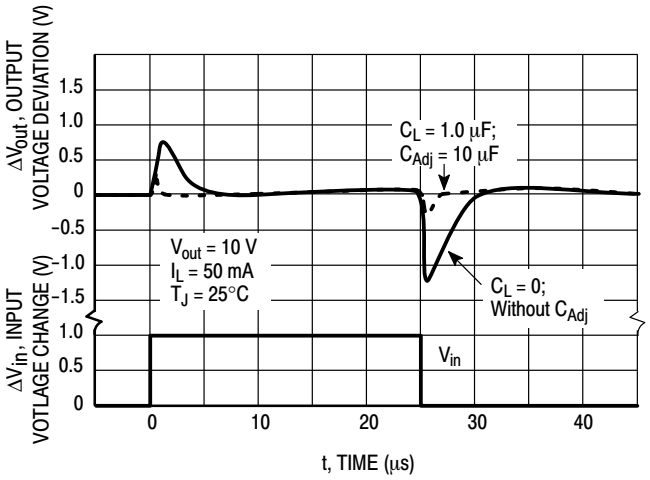


**Figure 17. Line Transient Response**

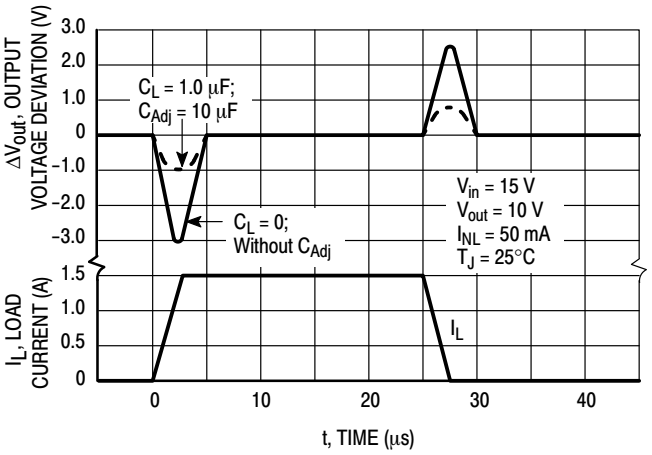


**Figure 18. Load Transient Response**



Share Feedback
Your Opinion Matters

## APPLICATIONS INFORMATION

### Basic Circuit Operation

The LM317 is a 3−terminal floating regulator. In operation, the LM317 develops and maintains a nominal 1.25 V reference ($V_{ref}$) between its output and adjustment terminals. This reference voltage is converted to a programming current ($I_{PROG}$) by $R_1$ (see Figure 17), and this constant current flows through $R_2$ to ground.

The regulated output voltage is given by:

$$V_{out} = V_{ref}\left(1 + \frac{R_2}{R_1}\right) + I_{Adj} R_2$$

Since the current from the adjustment terminal ($I_{Adj}$) represents an error term in the equation, the LM317 was designed to control $I_{Adj}$ to less than 100 μA and keep it constant. To do this, all quiescent operating current is returned to the output terminal. This imposes the requirement for a minimum load current. If the load current is less than this minimum, the output voltage will rise.

Since the LM317 is a floating regulator, it is only the voltage differential across the circuit which is important to performance, and operation at high voltages with respect to ground is possible.

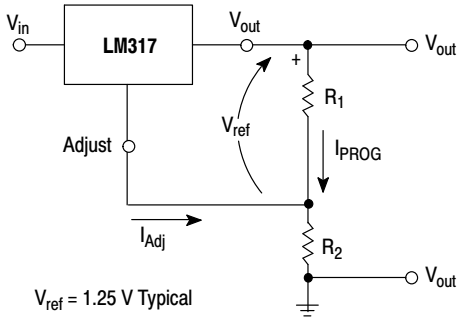


**Figure 19. Basic Circuit Configuration**

### Load Regulation

The LM317 is capable of providing extremely good load regulation, but a few precautions are needed to obtain maximum performance. For best performance, the programming resistor ($R_1$) should be connected as close to the regulator as possible to minimize line drops which effectively appear in series with the reference, thereby degrading regulation. The ground end of $R_2$ can be returned near the load ground to provide remote ground sensing and improve load regulation.

### External Capacitors

A 0.1 μF disc or 1.0 μF tantalum input bypass capacitor ($C_{in}$) is recommended to reduce the sensitivity to input line impedance.

The adjustment terminal may be bypassed to ground to improve ripple rejection. This capacitor ($C_{Adj}$) prevents ripple from being amplified as the output voltage is increased. A 10 μF capacitor should improve ripple rejection about 15 dB at 120 Hz in a 10 V application.

Although the LM317 is stable with no output capacitance, like any feedback circuit, certain values of external capacitance can cause excessive ringing. An output capacitance ($C_O$) in the form of a 1.0 μF tantalum or 25 μF aluminum electrolytic capacitor on the output swamps this effect and insures stability.

### Protection Diodes

When external capacitors are used with any IC regulator it is sometimes necessary to add protection diodes to prevent the capacitors from discharging through low current points into the regulator.

Figure 18 shows the LM317 with the recommended protection diodes for output voltages in excess of 25 V or high capacitance values ($C_O$ > 25 μF, $C_{Adj}$ > 10 μF). Diode $D_1$ prevents $C_O$ from discharging thru the IC during an input short circuit. Diode $D_2$ protects against capacitor $C_{Adj}$ discharging through the IC during an output short circuit. The combination of diodes $D_1$ and $D_2$ prevents $C_{Adj}$ from discharging through the IC during an input short circuit.

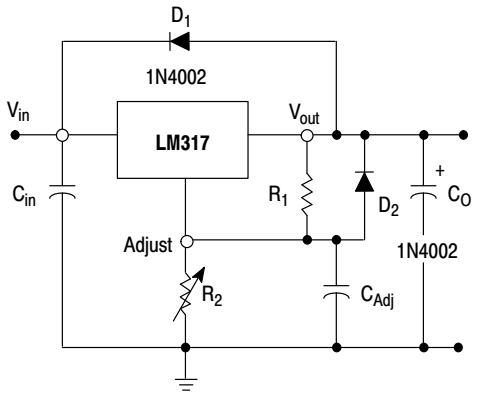


**Figure 20. Voltage Regulator with Protection Diodes**



Share Feedback
Your Opinion Matters

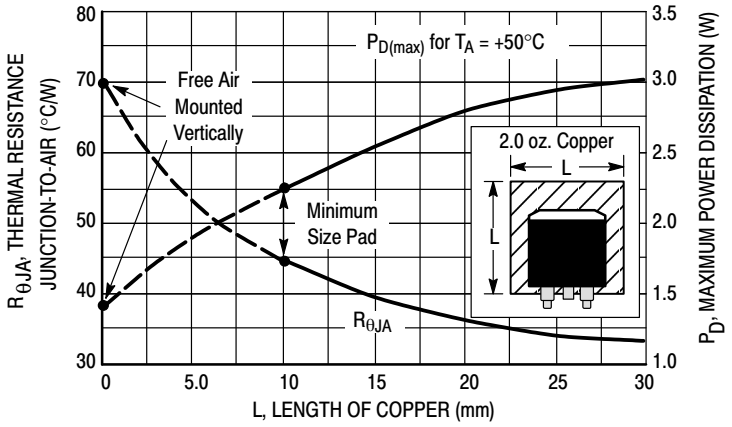


**Figure 21. D²PAK Thermal Resistance and Maximum Power Dissipation versus P.C.B. Copper Length**

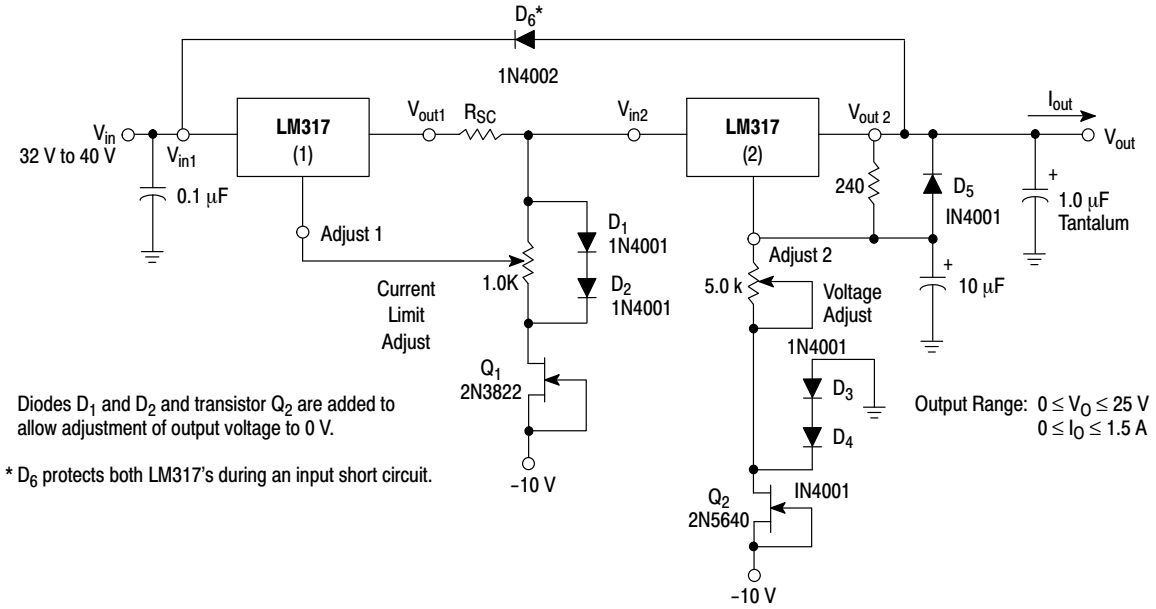


**Figure 22. "Laboratory" Power Supply with Adjustable Current Limit and Output Voltage**



Share Feedback
Your Opinion Matters

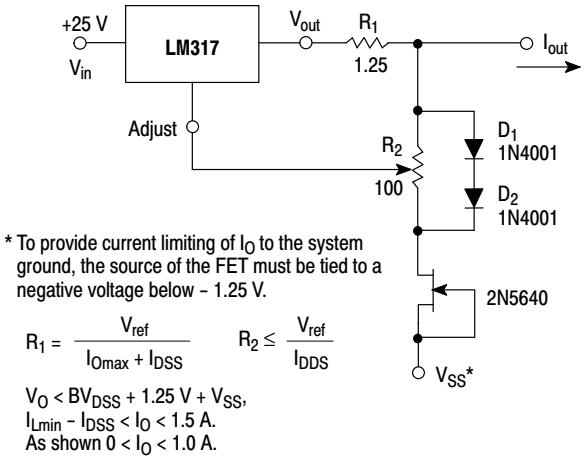


**Figure 23. Adjustable Current Limiter**

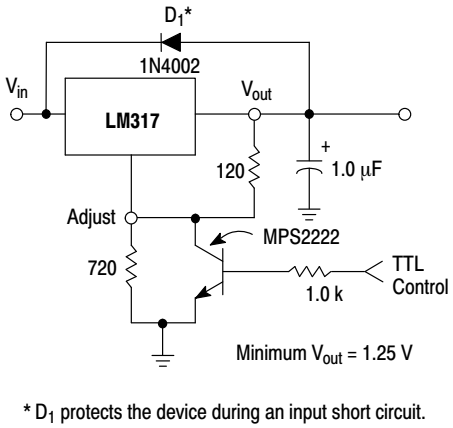


**Figure 24. 5.0 V Electronic Shutdown Regulator**

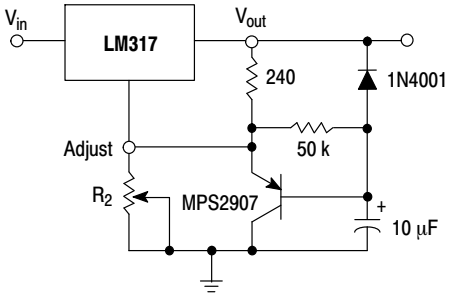


**Figure 25. Slow Turn−On Regulator**

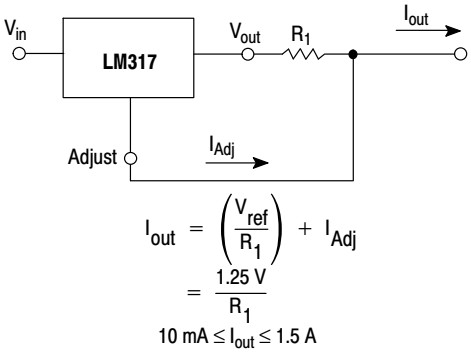


**Figure 26. Current Regulator**



Share Feedback
Your Opinion Matters

## ORDERING INFORMATION

| Device | Operating Temperature Range | Package | Shipping† |
|---|---|---|---|
| LM317BD2TG | $T_J$ = −40° to +125°C | $D^2PAK$−3 (Pb−Free) | 50 Units / Rail |
| LM317BD2TR4G | | $D^2PAK$−3 (Pb−Free) | 800 Tape & Reel |
| LM317BTG | | TO−220 (Pb−Free) | 50 Units / Rail |
| LM317D2TG | $T_J$ = 0° to +125°C | $D^2PAK$−3 (Pb−Free) | 50 Units / Rail |
| LM317D2TR4G | | $D^2PAK$−3 (Pb−Free) | 800 Tape & Reel |
| LM317TG | | TO−220 (Pb−Free) | 50 Units / Rail |
| NCV317BD2TG* | $T_J$ = −55° to +150°C | $D^2PAK$−3 (Pb−Free) | 50 Units / Rail |
| NCV317BD2TR4G* | | $D^2PAK$−3 (Pb−Free) | 800 Tape & Reel |
| NCV317BTG* | | TO−220 (Pb−Free) | 50 Units / Rail |

†For information on tape and reel specifications, including part orientation and tape sizes, please refer to our Tape and Reel Packaging Specifications Brochure, BRD8011/D.

*NCV Prefix for Automotive and Other Applications Requiring Unique Site and Control Change Requirements; AEC−Q100 Qualified and PPAP Capable.

## MARKING DIAGRAMS

**$D^2PAK$−3**
**D2T SUFFIX**
**CASE 936**

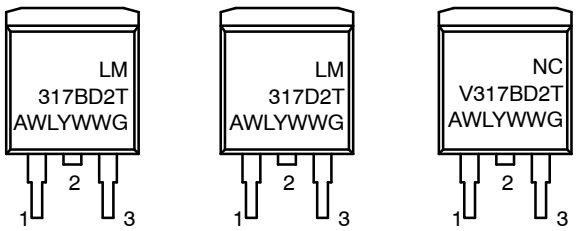


**TO−220**
**T SUFFIX**
**CASE 221A**

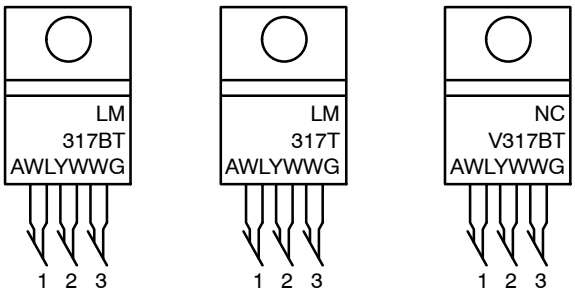


A = Assembly Location
WL = Wafer Lot
Y = Year
WW = Work Week
G = Pb−Free Package



Share Feedback
Your Opinion Matters

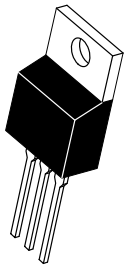

**TO−220, SINGLE GAUGE**
CASE 221AB
ISSUE A

DATE 16 NOV 2010

SCALE 1:1

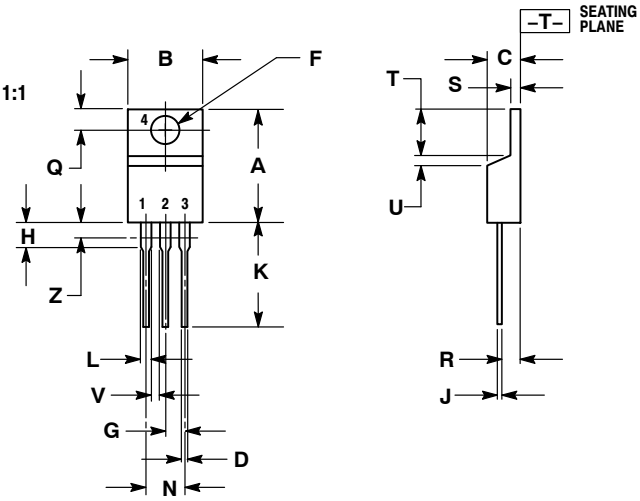


NOTES:
1. DIMENSIONING AND TOLERANCING PER ANSI Y14.5M, 1982.
2. CONTROLLING DIMENSION: INCHES.
3. DIMENSION Z DEFINES A ZONE WHERE ALL BODY AND LEAD IRREGULARITIES ARE ALLOWED.
4. PRODUCT SHIPPED PRIOR TO 2008 HAD DIMENSIONS S = 0.045 − 0.055 INCHES (1.143 − 1.397 MM)

| | INCHES | | MILLIMETERS | |
|---|---|---|---|---|
| DIM | MIN | MAX | MIN | MAX |
| A | 0.570 | 0.620 | 14.48 | 15.75 |
| B | 0.380 | 0.405 | 9.66 | 10.28 |
| C | 0.160 | 0.190 | 4.07 | 4.82 |
| D | 0.025 | 0.035 | 0.64 | 0.88 |
| F | 0.142 | 0.147 | 3.61 | 3.73 |
| G | 0.095 | 0.105 | 2.42 | 2.66 |
| H | 0.110 | 0.155 | 2.80 | 3.93 |
| J | 0.018 | 0.025 | 0.46 | 0.64 |
| K | 0.500 | 0.562 | 12.70 | 14.27 |
| L | 0.045 | 0.060 | 1.15 | 1.52 |
| N | 0.190 | 0.210 | 4.83 | 5.33 |
| Q | 0.100 | 0.120 | 2.54 | 3.04 |
| R | 0.080 | 0.110 | 2.04 | 2.79 |
| S | 0.020 | 0.024 | 0.508 | 0.61 |
| T | 0.235 | 0.255 | 5.97 | 6.47 |
| U | 0.000 | 0.050 | 0.00 | 1.27 |
| V | 0.045 | --- | 1.15 | --- |
| Z | --- | 0.080 | --- | 2.04 |

STYLE 1:
PIN 1. BASE
2. COLLECTOR
3. EMITTER
4. COLLECTOR

STYLE 2:
PIN 1. BASE
2. EMITTER
3. COLLECTOR
4. EMITTER

STYLE 3:
PIN 1. CATHODE
2. ANODE
3. GATE
4. ANODE

STYLE 4:
PIN 1. MAIN TERMINAL 1
2. MAIN TERMINAL 2
3. GATE
4. MAIN TERMINAL 2

STYLE 5:
PIN 1. GATE
2. DRAIN
3. SOURCE
4. DRAIN

STYLE 6:
PIN 1. ANODE
2. CATHODE
3. ANODE
4. CATHODE

STYLE 7:
PIN 1. CATHODE
2. ANODE
3. CATHODE
4. ANODE

STYLE 8:
PIN 1. CATHODE
2. ANODE
3. EXTERNAL TRIP/DELAY
4. ANODE

STYLE 9:
PIN 1. GATE
2. COLLECTOR
3. EMITTER
4. COLLECTOR

STYLE 10:
PIN 1. GATE
2. SOURCE
3. DRAIN
4. SOURCE

STYLE 11:
PIN 1. DRAIN
2. SOURCE
3. GATE
4. SOURCE

| DOCUMENT NUMBER: | 98AON23085D | Electronic versions are uncontrolled except when accessed directly from the Document Repository. Printed versions are uncontrolled except when stamped "CONTROLLED COPY" in red. |
|---|---|---|
| DESCRIPTION: | TO−220, SINGLE GAUGE | PAGE 1 OF 1 |

**onsemi** and onsemi are trademarks of Semiconductor Components Industries, LLC dba **onsemi** or its subsidiaries in the United States and/or other countries. **onsemi** reserves the right to make changes without further notice to any products herein. **onsemi** makes no warranty, representation or guarantee regarding the suitability of its products for any particular purpose, nor does **onsemi** assume any liability arising out of the application or use of any product or circuit, and specifically disclaims any and all liability, including without limitation special, consequential or incidental damages. **onsemi** does not convey any license under its patent rights nor the rights of others.

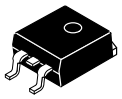

SCALE 1:1

**D²PAK**
CASE 936−03
ISSUE E

DATE 29 SEP 2015

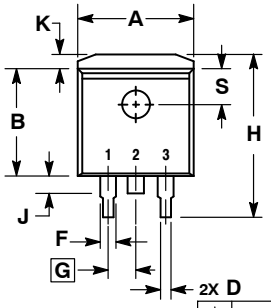


TOP VIEW

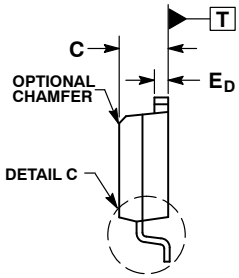


SIDE VIEW
DUAL GAUGE CONSTRUCTION

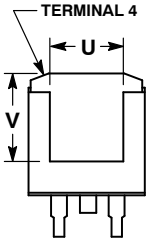


BOTTOM VIEW

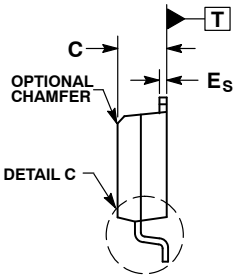


SIDE VIEW
SINGLE GAUGE CONSTRUCTION

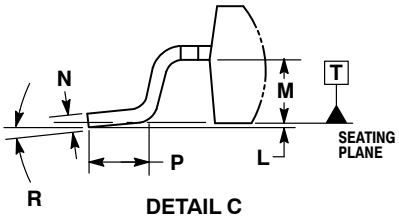


DETAIL C

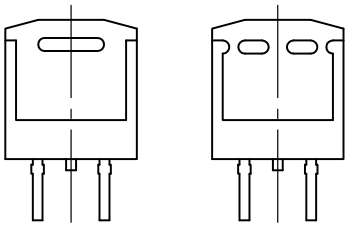

BOTTOM VIEW
OPTIONAL CONSTRUCTIONS

NOTES:
1. DIMENSIONING AND TOLERANCING PER ANSI Y14.5M, 1982.
2. CONTROLLING DIMENSION: INCHES.
3. TAB CONTOUR OPTIONAL WITHIN DIMENSIONS A AND K.
4. DIMENSIONS U AND V ESTABLISH A MINIMUM MOUNTING SURFACE FOR TERMINAL 4.
5. DIMENSIONS A AND B DO NOT INCLUDE MOLD FLASH OR GATE PROTRUSIONS. MOLD FLASH AND GATE PROTRUSIONS NOT TO EXCEED 0.025 (0.635) MAXIMUM.
6. SINGLE GAUGE DESIGN WILL BE SHIPPED AFTER FPCN EXPIRATION IN OCTOBER 2011.

| | INCHES | | MILLIMETERS | |
|---|---|---|---|---|
| DIM | MIN | MAX | MIN | MAX |
| A | 0.386 | 0.403 | 9.804 | 10.236 |
| B | 0.356 | 0.368 | 9.042 | 9.347 |
| C | 0.170 | 0.180 | 4.318 | 4.572 |
| D | 0.026 | 0.036 | 0.660 | 0.914 |
| $E_D$ | 0.045 | 0.055 | 1.143 | 1.397 |
| $E_S$ | 0.018 | 0.026 | 0.457 | 0.660 |
| F | 0.051 REF | | 1.295 REF | |
| G | 0.100 BSC | | 2.540 BSC | |
| H | 0.539 | 0.579 | 13.691 | 14.707 |
| J | 0.125 MAX | | 3.175 MAX | |
| K | 0.050 REF | | 1.270 REF | |
| L | 0.000 | 0.010 | 0.000 | 0.254 |
| M | 0.088 | 0.102 | 2.235 | 2.591 |
| N | 0.018 | 0.026 | 0.457 | 0.660 |
| P | 0.058 | 0.078 | 1.473 | 1.981 |
| R | 0° | 8° | 0° | 8° |
| S | 0.116 REF | | 2.946 REF | |
| U | 0.200 MIN | | 5.080 MIN | |
| V | 0.250 MIN | | 6.350 MIN | |

## RECOMMENDED SOLDERING FOOTPRINT*

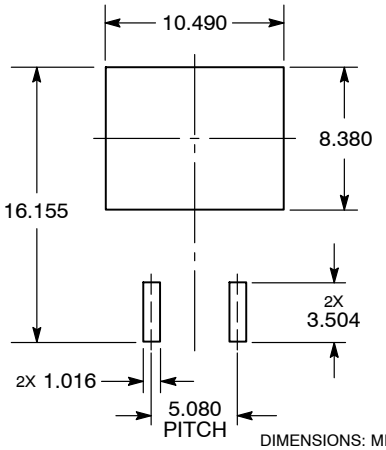


DIMENSIONS: MILLIMETERS

*For additional information on our Pb−Free strategy and soldering details, please download the **onsemi** Soldering and Mounting Techniques Reference Manual, SOLDERRM/D.

## GENERIC MARKING DIAGRAM*

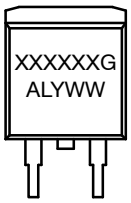


XXXXXX = Specific Device Code
A = Assembly Location
L = Wafer Lot
Y = Year
WW = Work Week
G = Pb−Free Package

*This information is generic. Please refer to device data sheet for actual part marking. Pb−Free indicator, "G" or microdot "▪", may or may not be present. Some products may not follow the Generic Marking.

| DOCUMENT NUMBER: | 98ASH01005A | Electronic versions are uncontrolled except when accessed directly from the Document Repository. Printed versions are uncontrolled except when stamped "CONTROLLED COPY" in red. |
|---|---|---|
| DESCRIPTION: | D²PAK | PAGE 1 OF 1 |

**onsemi** and onsemi are trademarks of Semiconductor Components Industries, LLC dba **onsemi** or its subsidiaries in the United States and/or other countries. **onsemi** reserves the right to make changes without further notice to any products herein. **onsemi** makes no warranty, representation or guarantee regarding the suitability of its products for any particular purpose, nor does **onsemi** assume any liability arising out of the application or use of any product or circuit, and specifically disclaims any and all liability, including without limitation special, consequential or incidental damages. **onsemi** does not convey any license under its patent rights nor the rights of others.

**onsemi**, onsemi, and other names, marks, and brands are registered and/or common law trademarks of Semiconductor Components Industries, LLC dba "**onsemi**" or its affiliates and/or subsidiaries in the United States and/or other countries. **onsemi** owns the rights to a number of patents, trademarks, copyrights, trade secrets, and other intellectual property. A listing of **onsemi**'s product/patent coverage may be accessed at www.onsemi.com/site/pdf/Patent−Marking.pdf. **onsemi** reserves the right to make changes at any time to any products or information herein, without notice. The information herein is provided "as−is" and **onsemi** makes no warranty, representation or guarantee regarding the accuracy of the information, product features, availability, functionality, or suitability of its products for any particular purpose, nor does **onsemi** assume any liability arising out of the application or use of any product or circuit, and specifically disclaims any and all liability, including without limitation special, consequential or incidental damages. Buyer is responsible for its products and applications using **onsemi** products, including compliance with all laws, regulations and safety requirements or standards, regardless of any support or applications information provided by **onsemi**. "Typical" parameters which may be provided in **onsemi** data sheets and/or specifications can and do vary in different applications and actual performance may vary over time. All operating parameters, including "Typicals" must be validated for each customer application by customer's technical experts. **onsemi** does not convey any license under any of its intellectual property rights nor the rights of others. **onsemi** products are not designed, intended, or authorized for use as a critical component in life support systems or any FDA Class 3 medical devices or medical devices with a same or similar classification in a foreign jurisdiction or any devices intended for implantation in the human body. Should Buyer purchase or use **onsemi** products for any such unintended or unauthorized application, Buyer shall indemnify and hold **onsemi** and its officers, employees, subsidiaries, affiliates, and distributors harmless against all claims, costs, damages, and expenses, and reasonable attorney fees arising out of, directly or indirectly, any claim of personal injury or death associated with such unintended or unauthorized use, even if such claim alleges that **onsemi** was negligent regarding the design or manufacture of the part. **onsemi** is an Equal Opportunity/Affirmative Action Employer. This literature is subject to all applicable copyright laws and is not for resale in any manner.

## ADDITIONAL INFORMATION

**TECHNICAL PUBLICATIONS**:
**Technical Library:** www.onsemi.com/design/resources/technical−documentation
**onsemi Website:** www.onsemi.com

**ONLINE SUPPORT**: www.onsemi.com/support
**For additional information, please contact your local Sales Representative at**
www.onsemi.com/support/sales