1/1.8-inch 8 MP CMOS Digital Image Sensor

AR0822

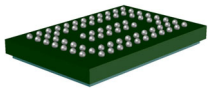

PBGA75
CASE 117CU

ORDERING INFORMATION
See detailed ordering and shipping information on page 2 of this data sheet.

Public Data Sheet

Interested in what you see? If you would like more detailed information, please request the full version of our data sheet.

Request Full Data Sheet

General Description

The AR0822 is a stacked 1/1.8-inch BSI (back side illuminated) CMOS digital image sensor with an active-pixel array of 3840 (H) x 2160 (V). It captures images in either linear or high dynamic range modes with a rolling-shutter readout, and includes sophisticated camera functions such as binning, windowing and both video and single frame modes. It is designed for both low light and high dynamic range performance. AR0822 can combine on chip up to three exposures and compand to 12-bit HDR output or it could provide line interleaved output of two exposures to support off chip HDR in an ISP chip. It could also provide enhanced Dynamic Range from single exposure. The AR0822 produces extraordinarily clear, sharp digital pictures, and its ability to capture both continuous video and single frames makes it the perfect choice for security applications.

Table 1. KEY PARAMETERS

Parameter	Typical Value
Optical format	1/1.8 inch (8.81 mm diagonal)
Active pixels	3840(H) x 2160 (V)
Pixel size	2.0 μm x 2.0 μm, BSI
Color filter array	RGB Bayer Monochrome
Chief ray angle (CRA)	10°
Shutter type	ERS and GRR
Input clock range	6 ~ 48 MHz
Serial bitrate range	350 Mbps ~ 2 Gbps per lane
Pixel clock range	164.25 MHz
Output Interface	4-lane MIPI-CSI2 (1-lane, 2-lane supported)
ADC resolution	12-bit, on die
Analog gain Analog gain range	0 ~ 24 dB (Linear) 0 ~ 18 dB (Li-HDR, eHDR)
Digital gain Digital gain range	24 ~ 44.625 dB (Linear) 18 ~ 44.625 dB (Li-HDR, eHDR) 0 ~ 5.625 dB (eDR)
Subsampling	bin2, bin4, skip2, skip4
Output format	Linear: 10 bit and 12 bit eHDR: 10, 12, 14, 16 and 20 bit
Frame rate	Linear: 4k @ 60 fps LI-HDR (2exp): 4k @ 30 fps eHDR (3exp): 4k @ 30 fps
Responsivity	18 ke–/lux*sec
SNRMAX	39 dB

1. θJA is dependent on the customer module design and should not be used for calculating junction temperature.

Features

- 4k (8 MP) at 60 fps for Excellent Video Performance
- Fast Full Resolution Video Capture of 3840 x 2160 at up to 30 fps in 3-exposure eHDR
- Advanced On-Sensor embedded High Dynamic Range (eHDR) Reconstruct with Flexible Exposure Ratio Control
- Motion detection, Auto Wake Up from Standby Mode
- enhanced Dynamic Range (eDR) Mode to Reach enhanced Dynamic Range Yet No Motion Artifact from Multiple Exposures
  - eDR mode: enhanced Dynamic Range from Single Exposure.
- LI-eDR: T1-eDR + T2 Output in Line-interleaved Mode
- Two Exposure LI-HDR Output
- Enhanced NIR Response

Applications

- Security Camera
- IoT
- Car DVR

© Semiconductor Components Industries, LLC, 2020

Table 1. KEY PARAMETERS (continued)

Parameter	Typical Value
Maximum dynamic range	Linear: 78 dB eHDR 3-exp: 120 dB
Supply voltage	I/O: 1.8 V (1.7V < V_{supply} < 1.9 V) or 2.7 V < V_{supply} < 2.9 V) Digital : 1.05 V (1.0 V < V_{supply} < 1.1 V) Analog: 2.8 V (2.7 V < V_{supply} < 2.9 V) MIPI: 1.05 V (1.0 V < V_{supply} < 1.1 V)
Power consumption (typical) The power consumption is estimated	Linear 30 fps: 223 mW 3-exp eHDR 30 fps: 540 mW
Operating Temperature Range (at junction) – T_J	–30 °C to +85 °C (Junction)
Optimal Performance Temperature Range (at junction) – T_J	0 °C to +60 °C (Junction)
Package options	mPBGA 14 x 9.5 mm θJA: 31 °C/W (Note) θJB: 19 °C/W

1. θJA is dependent on the customer module design and should not be used for calculating junction temperature.

Table 2. ORDER INFORMATION

Part Number Description	Orderable Product Attribute	Description
AR0822NPSC10SMTA0-DP	RGB, 10 °CRA, mPBGA Package	Dry Pack with Protective Film
AR0822NPSC10SMTA0-DR	RGB, 10 °CRA, mPBGA Package	Dry Pack without Protective Film
AR0822NPSM10SMTA0-DP	Mono, 10 °CRA, mPBGA Package	Dry Pack with Protective Film
AR0822NPSM10SMTA0-DR	Mono, 10 °CRA, mPBGA Package	Dry Pack without Protective Film
AR0822NPSC10SMTAH3-GEVB	RGB, 10 °CRA	Demo3 Headboard
AR0822NPSM10SMTAH3-GEVB	Mono, 10 °CRA	Demo3 Headboard

Table 3. 12-bit MODE OF OPERATION AND POWER

Mode Name	Mode Description	Resolution	Frame Rate
Native	4K Linear Full Res	3840 x 2160	60
Native	4K Linear Full Res, Lower Frame Rate	3840 x 2160	30
eHDR Native	4K eHDR 3exp Full Res	3840 x 2160	30
LI Native	4K LI-HDR 2exp	3840 x 2160	30
WoM bin4skip2 (Note 2)	Wake on Motion w/ Streaming	480 x 270	1
Bin2	2 MP Linear	1920 x 1080	120
eDR Native (Note 3)	4K eDR	3840 x 2160	30
LI-eDR Native	4K LI-eDR	3840 x 2160	30

2. Actual resolution of sensor is 960 x 270 with every alternate col being dummy pixel output, active resolution is 480 x 270
3. eDR mode could go upto 45 fps

Share Feedback
Your Opinion Matters

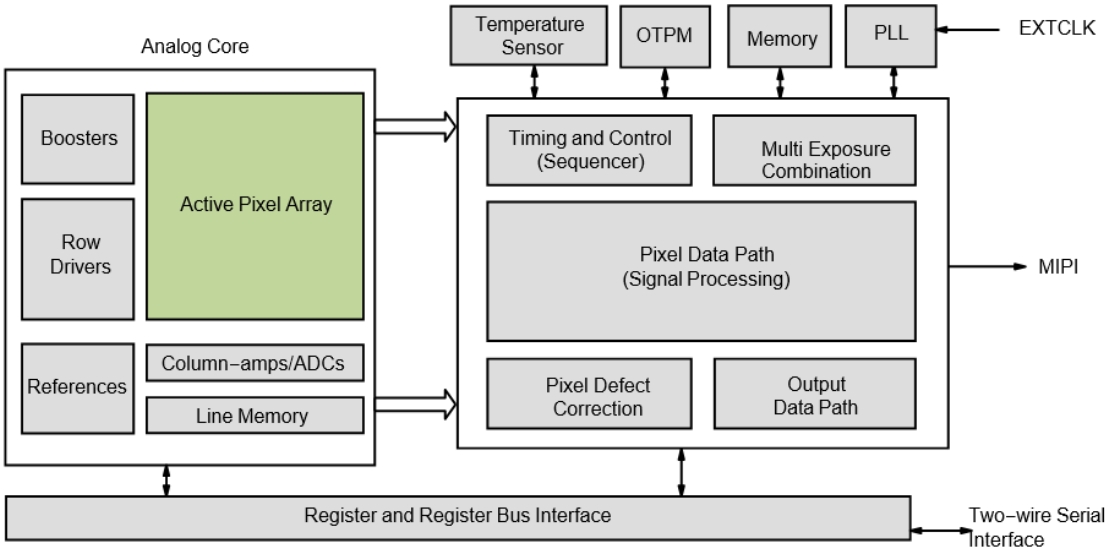

Figure 1. Block Diagram

Share Feedback
Your Opinion Matters

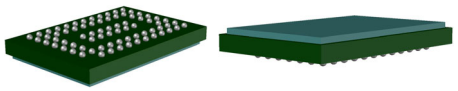

PBGA75 14.00x9.50x1.55, 1.00P
CASE 117CU
ISSUE A

DATE 18 JAN 2024

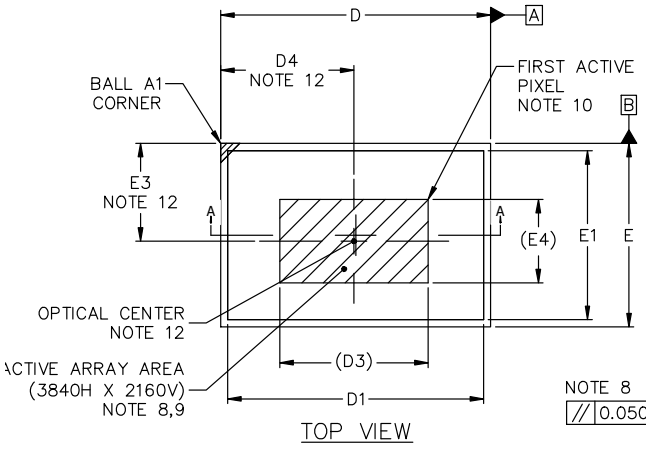

TOP VIEW

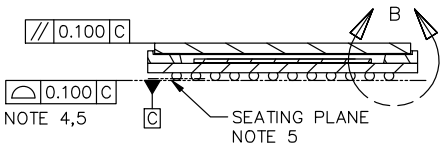

SECTION A–A

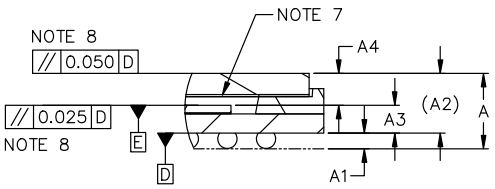

DETAIL B'
SCALE 2:1

NOTES:

1. DIMENSIONING AND TOLERANCING CONFORM TO ASME Y14.5–2018.
2. ALL DIMENSIONS ARE IN MILLIMETERS.
3. SOLDER BALL DIAMETER IS MEASURED AT THE MAXIMUM SOLDER BALL DIAMETER PARALLEL TO DATUM C.
4. COPLANARITY APPLIES TO THE SPHERICAL CROWNS OF THE SOLDER BALLS.
5. DATUM C, THE SEATING PLANE IS DEFINED BY THE SPHERICAL CROWNS OF THE SOLDER BALLS.
6. GLASS: 0.550 THICKNESS; REFRACTIVE INDEX = 1.52.
7. AIR GAP BETWEEN GLASS AND PIXEL ARRAY: 0.275 THICKNESS.
8. PARALLELISM APPLIES ONLY TO THE ACTIVE ARRAY.
9. MAXIMUM ROTATION OF ACTIVE ARRAY RELATIVE TO DATUMS A AND B IS ± 1°.
10. REFER TO THE DEVICE DATA SHEET FOR TOTAL PIXEL ARRAY DEFINITIONS.
11. PACKAGE CENTER (X, Y) = (0.000, 0.000).
12. OPTICAL CENTER RELATIVE TO PACKAGE CENTER (X, Y) = (−0.087, −0.315).

DIM	MILLIMETERS		
	MIN.	NOM.	MAX.
A	----	----	2.100
A1	0.350	0.400	0.450
A2	1.550 REF.		
A3	0.625	0.725	0.825
A4	0.725	0.825	0.925
b	0.450	0.500	0.550
D	13.900	14.000	14.100
D1	13.146	13.246	13.346
D2	11.000 BSC		
D3	7.680 REF.		
D4	6.813	6.913	7.013
E	9.400	9.500	9.600
E1	8.645	8.745	8.845
E2	7.000 BSC		
E3	4.965	5.065	5.165
E4	4.320 REF.		
e	1.000 BSC		

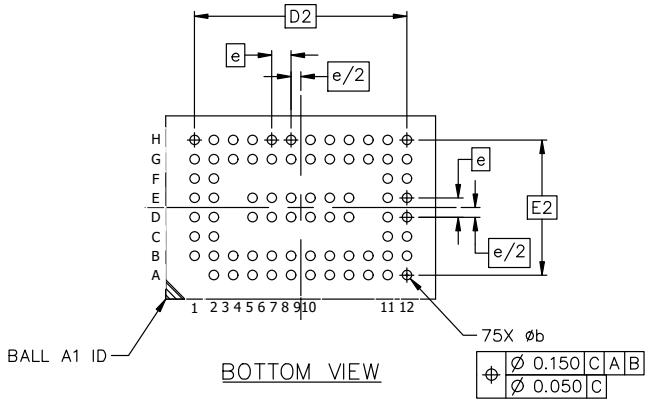

BOTTOM VIEW

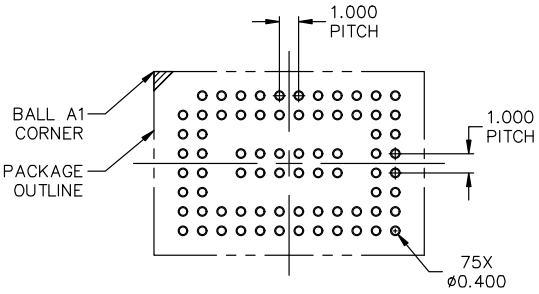

RECOMMENDED MOUNTING FOOTPRINT*

*FOR ADDITIONAL INFORMATION ON OUR Pb–FREE STRATEGY AND SOLDERING DETAILS, PLEASE DOWNLOAD THE ON SEMICONDUCTOR SOLDERING AND MOUNTING TECHNIQUES REFERENCE MANUAL, SOLDERRM/D.

GENERIC MARKING DIAGRAM*

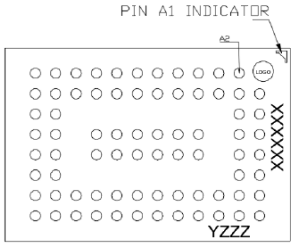

XXXX = Specific Device Code
Y = Year
ZZZ = Lot Traceability

*This information is generic. Please refer to device data sheet for actual part marking. Pb–Free indicator, “G” or microdot “▪”, may or may not be present. Some products may not follow the Generic Marking.

DOCUMENT NUMBER:	**98AON20669H**	Electronic versions are uncontrolled except when accessed directly from the Document Repository. Printed versions are uncontrolled except when stamped “CONTROLLED COPY” in red.	
DESCRIPTION:	**PBGA75 14.00x9.50x1.55, 1.00P**		**PAGE 1 OF 1**

onsemi and onsemi are trademarks of Semiconductor Components Industries, LLC dba **onsemi** or its subsidiaries in the United States and/or other countries. **onsemi** reserves the right to make changes without further notice to any products herein. **onsemi** makes no warranty, representation or guarantee regarding the suitability of its products for any particular purpose, nor does **onsemi** assume any liability arising out of the application or use of any product or circuit, and specifically disclaims any and all liability, including without limitation special, consequential or incidental damages. **onsemi** does not convey any license under its patent rights nor the rights of others.

onsemi, , and other names, marks, and brands are registered and/or common law trademarks of Semiconductor Components Industries, LLC dba "**onsemi**" or its affiliates and/or subsidiaries in the United States and/or other countries. **onsemi** owns the rights to a number of patents, trademarks, copyrights, trade secrets, and other intellectual property. A listing of **onsemi**'s product/patent coverage may be accessed at www.onsemi.com/site/pdf/Patent−Marking.pdf. **onsemi** reserves the right to make changes at any time to any products or information herein, without notice. The information herein is provided "as−is" and **onsemi** makes no warranty, representation or guarantee regarding the accuracy of the information, product features, availability, functionality, or suitability of its products for any particular purpose, nor does **onsemi** assume any liability arising out of the application or use of any product or circuit, and specifically disclaims any and all liability, including without limitation special, consequential or incidental damages. Buyer is responsible for its products and applications using **onsemi** products, including compliance with all laws, regulations and safety requirements or standards, regardless of any support or applications information provided by **onsemi**. "Typical" parameters which may be provided in **onsemi** data sheets and/or specifications can and do vary in different applications and actual performance may vary over time. All operating parameters, including "Typicals" must be validated for each customer application by customer's technical experts. **onsemi** does not convey any license under any of its intellectual property rights nor the rights of others. **onsemi** products are not designed, intended, or authorized for use as a critical component in life support systems or any FDA Class 3 medical devices or medical devices with a same or similar classification in a foreign jurisdiction or any devices intended for implantation in the human body. Should Buyer purchase or use **onsemi** products for any such unintended or unauthorized application, Buyer shall indemnify and hold **onsemi** and its officers, employees, subsidiaries, affiliates, and distributors harmless against all claims, costs, damages, and expenses, and reasonable attorney fees arising out of, directly or indirectly, any claim of personal injury or death associated with such unintended or unauthorized use, even if such claim alleges that **onsemi** was negligent regarding the design or manufacture of the part. **onsemi** is an Equal Opportunity/Affirmative Action Employer. This literature is subject to all applicable copyright laws and is not for resale in any manner.

ADDITIONAL INFORMATION

TECHNICAL PUBLICATIONS:
Technical Library: www.onsemi.com/design/resources/technical−documentation
onsemi Website: www.onsemi.com

ONLINE SUPPORT: www.onsemi.com/support
For additional information, please contact your local Sales Representative at www.onsemi.com/support/sales